KINROSS Great Bear

Great Bear Gold Project
Impact Statement

Appendix E-3:

Noise Modelling Report

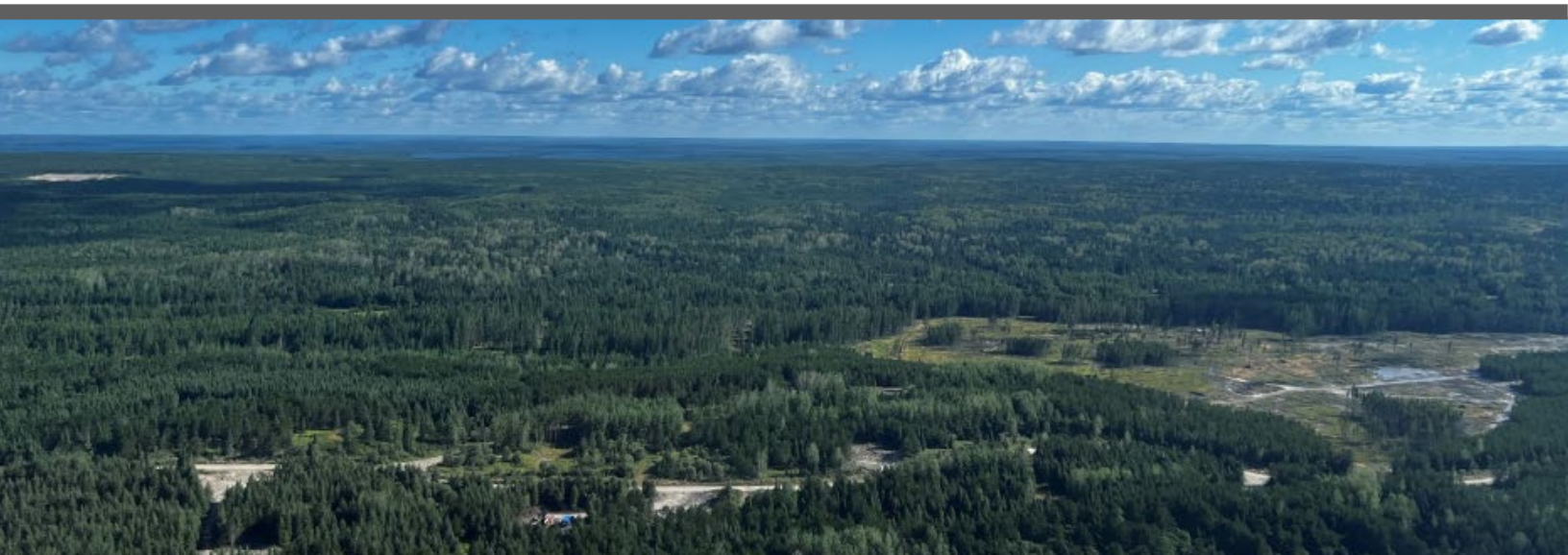

Great Bear Project
Noise Modelling Report

Great Bear Resources Ltd.
Project # CA03912

Prepared for:

Great Bear Resources Ltd.

17th Floor 25 York Street, Toronto, Ontario, Canada. M5J 2V5

September 2025

Great Bear Project
Noise Modelling Report

Project # CA03912

Prepared for:

Great Bear Resources Ltd.
17th Floor 25 York Street
Toronto, Ontario, Canada
M5J 2V5

Prepared by:

Wood Group Digital Consulting, Inc.
Vibration, Dynamics and Noise (VDN)
118, 4242 – 7 Street SE, Calgary
Alberta T2G 2Y8
Canada
T: (403)-245-5666
www.woodplc.com/vdn

September 2025

Copyright and non-disclosure notice

The contents and layout of this report are subject to copyright owned by Wood (© Wood Group Digital Consulting, Inc. Vibration, Dynamics and Noise (VDN)), save to the extent that copyright has been legally assigned by us to another party or is used by Wood under license. To the extent that we own the copyright in this report, it may not be copied or used without our prior written agreement for any purpose other than the purpose indicated in this report. The methodology (if any) contained in this report is provided to you in confidence and must not be disclosed or copied to third parties without the prior written agreement of Wood. Disclosure of that information may constitute an actionable breach of confidence or may otherwise prejudice our commercial interests. Any third party who obtains access to this report by any means will, in any event, be subject to the Third-Party Disclaimer set out below.

Third-party disclaimer

Any disclosure of this report to a third party is subject to this disclaimer. The report was prepared by Wood at the instruction of, and for use by, our client named on the front of the report. It does not in any way constitute advice to any third party who is able to access it by any means. Wood excludes to the fullest extent lawfully permitted all liability whatsoever for any loss or damage howsoever arising from reliance on the contents of this report. We do not however exclude our liability (if any) for personal injury or death resulting from our negligence, for fraud or any other matter in relation to which we cannot legally exclude liability.

'Wood' is a trading name for John Wood Group PLC and its subsidiaries.

Executive Summary

Great Bear Resources Ltd., a wholly owned subsidiary of Kinross Gold Corporation, is planning to develop, operate, and eventually reclaim an underground mine and two open pits for its gold mining "Great Bear Gold" Project ("the Project"). Wood was retained to predict noise levels emitted by the different phases of the Project located in the Red Lake mining district; approximately 25 kilometres (km) southeast of the Municipality of Red Lake in northwestern Ontario.

The three phases of the Project were evaluated and modelled as four periods: construction phase (3 years), operations phase - peak production (8 years), operations phase - underground production only (18 years) and closure phase (3 years). During operations, the Project site is expected to operate continuously for 24 hours per day, 7 days per week. The advanced exploration activities are expected to continue during the construction phase of the Project.

The applicable guidelines used for the assessment of noise impacts from the Project were the Health Canada *Noise Guideline* [1] and the Ontario Ministry of Environment, Conservation and Parks *Environmental Noise Guideline NPC-300* [2]. Twenty-nine (29) representative Points of Reception (PORs) were identified and considered for this assessment. The PORs include seasonal cabins/outfitters, family cottages, commercial properties and unoccupied private properties. The Project site is located in a "*rural area"* which is best described as a Class 3 area in accordance with the area classifications defined within provincial Publication NPC-300. The Health Canada Guideline uses area classification based on a qualitative description of community characteristics and the area where the Project is located can be characterized as "*quiet rural*".

Based on the Project layout and operational conditions as described in the report, and the implementation of the prescribed noise control measures, the Project is predicted to meet both provincial and federal guidelines.

Table of Contents

PAGE

1.0 Introduction 5
1.1 Overview 5
1.2 Objective 6
2.0 Points of Reception 9
3.0 Baseline Conditions 12
4.0 Sound Source Summary 13
4.1 Overview 13
4.2 Construction Phase 14
4.3 Operations Phase – Peak Production 16
4.4 Operations Phase – Underground Production 20
4.5 Closure Phase 21
5.0 Applicable Guidelines 23
5.1 Provincial Noise Guideline 23
5.1.1 Steady Sound Criteria 23
5.1.2 Impulsive Sound Criteria 24
5.1.3 Emergency Equipment Testing Criteria 24
5.2 Federal Noise Guideline 24
5.2.1 Examples of Potential Impacts Associated with Noise 24
5.2.1.1 Noise-Induced Hearing Loss 24
5.2.1.2 Noise-Induced Sleep Disturbance 25
5.2.1.3 Interference with Speech Comprehension 25
5.2.1.4 Indicator of Potential Human Health Effects 25
5.2.2 Established Criteria 25
6.0 Noise Assessment 27
6.1 Methodology 27
6.2 Modelling Results 28
6.2.1 Provincial Assessment Framework 29
6.2.2 Health Canada Assessment Framework 29
6.2.3 Predicted Impacts 29
7.0 Conclusions 37
8.0 Closing 38
9.0 References 39

List of Tables

Table 2-1: Points of Reception Summary 9
Table 3-1: Baseline Sound Levels 12
Table 4-1: Mine Ventilation Systems 14
Table 4-2: Mitigated Generator Noise Sources 14
Table 4-3: Haul Truck Traffic – Construction 15
Table 4-4: Mine Infrastructure –Noise Sources Summary 17
Table 4-5 Natural Gas Generators – Noise Source Summary 18
Table 4-6: Auxiliary Mine Infrastructure – Noise Sources Summary 18
Table 4-7: Haul Truck Traffic – Peak Production 19
Table 4-8 Haul Truck Traffic – Underground Production 20
Table 5-1: Guidelines for Noise-Induced Sleep Disturbance 25
Table 5-2: Noise Impact Criteria Based on Health Canada Noise Guideline 26
Table 6-1: Transmission Loss Values – Mine Infrastructure Buildings 28
Table 6-2: Noise Modelling Results ($L_{Aeq-1hr}$) – Provincial Assessment Framework 30
Table 6-3: Noise Modelling Results ($L_{Aeq-1hr}$) – Federal Assessment Framework 34
Table 6-4: Noise Modelling Results (L_{dn} and Change in %HA) – Federal Assessment Framework 36

List of Figures

Figure 1-1: Project Location 7
Figure 1-2: Site Plan 8
Figure 2-1: Aerial Map with Point of Reception Locations 11
Figure 4-1: Haulage Truck Routes 22

List of Appendices

Appendix A: Noise Source Summary Tables
Appendix B: Land Tenure Map
Appendix C: Assessment Figures
Appendix D: Manufacturer Sound Data
Appendix E: Non-contributing Noise Sources
Appendix F: Key Parameters included in the Model and Sample Calculations
Appendix G: Technical Terms and Acoustical Descriptor

List of Abbreviations

Abbreviation	Description
%HA	Percent Highly Annoyed
AEX	Advanced Exploration Program
BS	Borrow Source
BSR	Baseline Receptor
CI	Closure Phase
CRF	Cemented Rock Fill
CWP	Collection Water Pond
dB	Decibels (no weighting)
dBA	A-weighted Decibels
FAR	Fresh Air Raise
FHWA	U.S. Federal Highway Administration
GBP	Great Bear Project
GBR	Great Bear Resources
HC	Health Canada
kW	Kilowatts
LGO	Low Grade Ore
RAR	Return Air Raise
m	metres
MECP	Ontario Ministry of Environment, Conservation and Parks
MRS	Mine Rock Stockpile
NPAG	Non-Potentially Acid Generating
NPC	Noise Pollution Control
OVB	Overburden Stockpile
PAG	Potentially Acid Generating
POR	Point of Reception
P-P	Peak Production Period – Operations Phase
PWL	Sound Power Level
ROM	Run of Mine
TLRU	Traditional Land and Resource Use
TMF	Tailings Management Facility
tpd	Tonnes per day
U-P	Operations Phase - underground (only) production period
UTM	Universal Transverse Mercator
VMF	Viggo Management Facility

1.0 Introduction

1.1 Overview

Great Bear Resources Ltd. (Great Bear Resources), a wholly owned subsidiary of Kinross Gold Corporation, is planning to develop, operate, and reclaim a gold mine (the Great Bear Project or Project) on the Great Bear Property (the Property). The Project will consist of an onsite ore processing facility, two open pits, underground mining processes, auxiliary operations and administrative activities will also take place on the Property. The Property is located approximately 25 kilometers (km) southeast of the Municipality of Red Lake in Ontario, and northwest of the Township of Ear Falls, see Figure 1-1.

An Impact Assessment pursuant to the *Impact Assessment Act, 2019* is required to be completed for the Project. This Noise Modelling report is one of a series of documents prepared on behalf of Great Bear Resources to establish the predicted environmental effects of the Project.

The ore body is primarily hosted in the LP Fault Zone where the two open pits will be mined. Ore from the open pits will be processed in an onsite process plant. The main components of the Project include:

- LP Central pit;
- Viggo pit / Viggo management facility (VMF);
- Run of mine stockpile (ROM);
- Overburden stockpiles (OVB);
- Low grade ore stockpiles (LGO);
- Mine rock stockpiles (MRS);
- Sand and gravel pits;
- Quarries;
- Tailings management facility (TMF);
- Access and haul roads;
- Collection Water Pond (CWP);
- Process plant;
- Main substation;
- Natural gas power plant;
- Water treatment plant;
- Service and administration complex;
- Permanent camp complex;
- Explosive manufacturing and storage;
- Production shaft;
- Cemented rockfill (CRF) plant; and
- Paste plant.

The Project is expected to be constructed over a three-year period during which the Viggo pit will be mined to extract high ratios of non-potentially acid generating (NPAG) mine rock for construction purposes, as well as ore for stockpiling. Advanced Exploration Program (AEX) activities will be occurring during the construction phase and then

stop once mining operations start. The operations phase of the Project will focus on LP Central pit and underground mining and ore processing with the expected duration of 8 years of full production, followed by only underground mining for a period of 18 years. The primary active decommissioning and closure is expected to occur over 3 years and will be followed by a period of passive site management while the mine workings are filled with water after which remaining infrastructure will be removed. There will be minimal noise emissions during the latter period of closure and noise emissions were not modelled for this period. A site plan, provided by Great Bear Resources, identifying the key components of the Project is shown in Figure 1-2.

1.2 Objective

The Noise Modelling Report has been prepared to assess the potential effects of the construction, operations, and closure phases of the Project. To evaluate these effects of the Project, information provided by Great Bear Resources, and onsite investigations (i.e., Wood's baseline noise programs) conducted in 2022 and 2023 were used for the assessment.

The following guidelines were used for the evaluation of the Project's noise emissions:

- Ontario Ministry of Environment, Conservation and Parks (MECP), *Environmental Noise Guideline NPC-300 - Stationary and Transportation Sources - Approval and Planning* (MECP, 2013) [2], and
- Health Canada - *Guidance for Evaluating Human Health Impacts in Environmental Assessment: Noise* (Health Canada, 2017) [1].

During construction, the Project site and associated activities are planned to occur for 12 hours per day, 7 days a week. During operations, the site is expected to operate continuously for 24 hours per day, 7 days per week. These mining activities will generate noise in the surrounding area of the Project site.

This Noise Modelling Report evaluates the noise impacts associated with construction, operations and closure phases at the identified representative Points of Reception (PORs) using predictive modelling against the applicable provincial and federal guidelines.

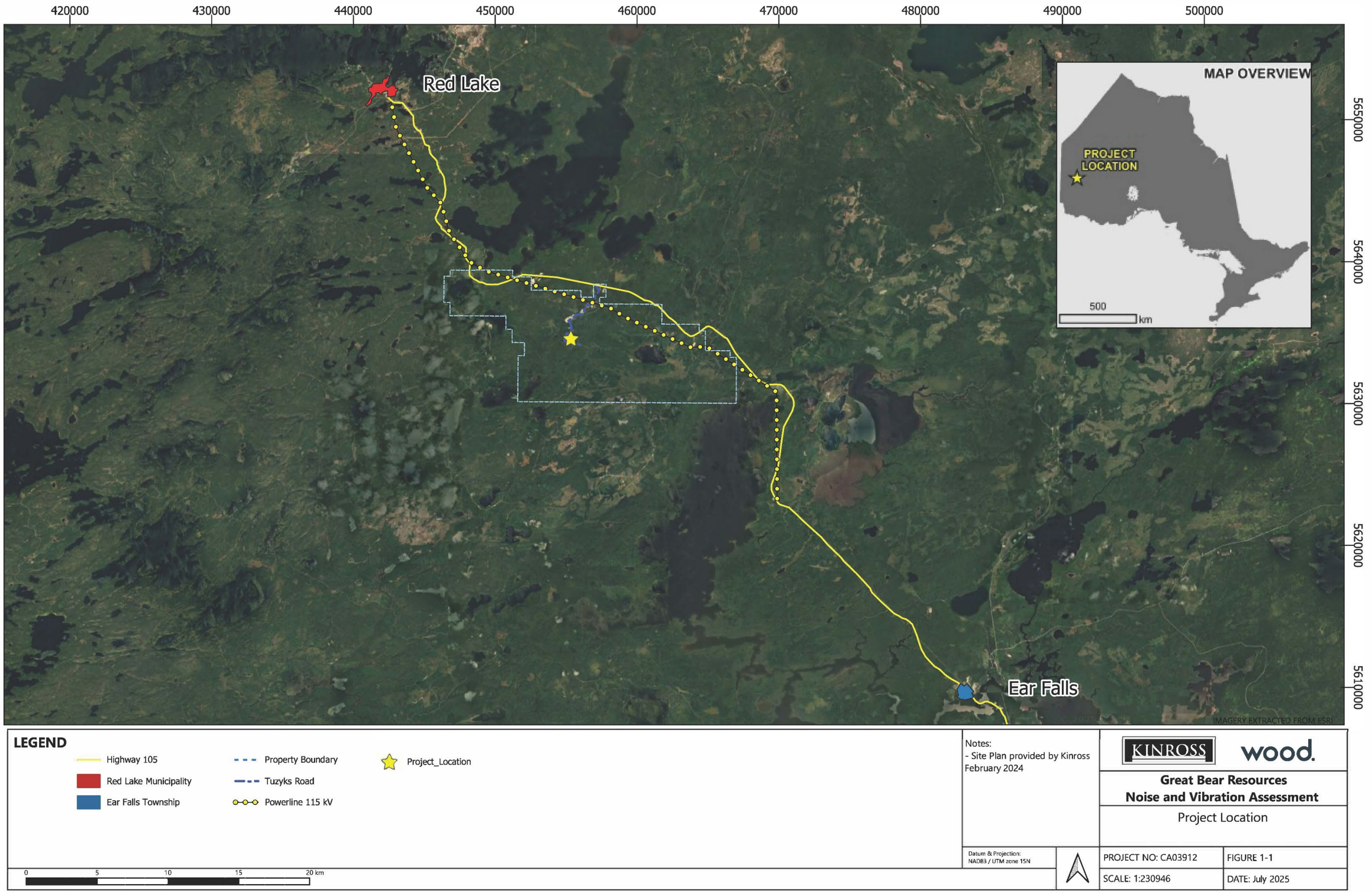

Figure 1-1: Project Location

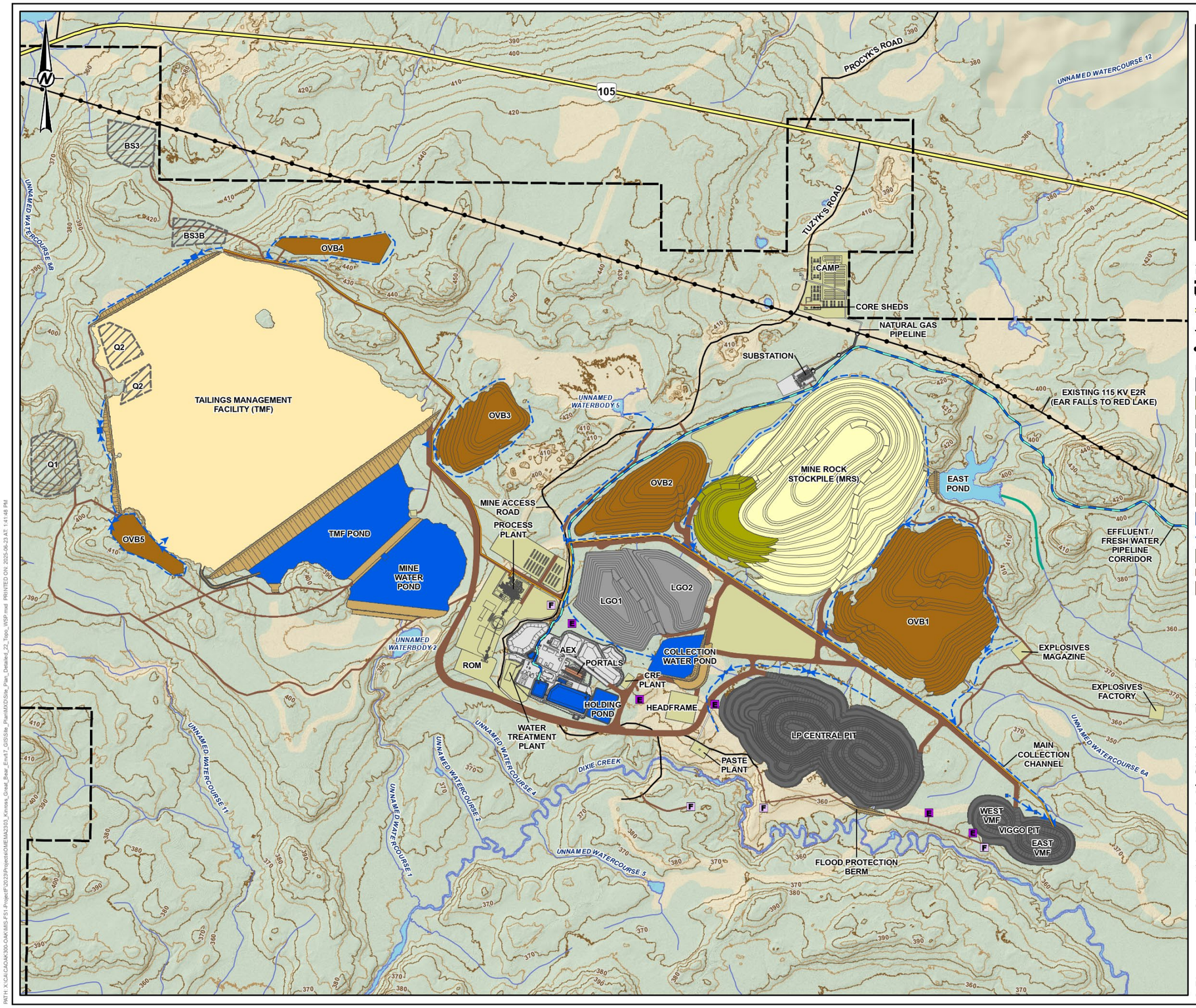

KEY MAP

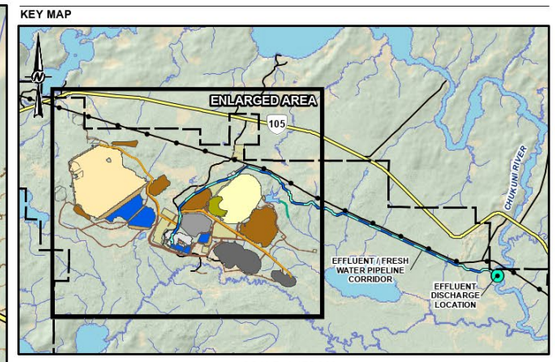

SCALE 1:175,000

LEGEND

- PROPERTY BOUNDARY
- HIGHWAY (INCLUDING ENBRIDGE PIPELINE)
- LOCAL ROAD
- EXISTING TRANSMISSION LINE
- WATERCOURSE
- WATERBODY
- MAJOR CONTOURS (10 M INTERVAL)
- MINOR CONTOURS (5 M INTERVAL)

PROPOSED MINE FEATURE

- OPEN PIT
- MINE ROCK STOCKPILE (NPAG)
- MINE ROCK STOCKPILE (PAG)
- LOW GRADE ORE STOCKPILE (LGO)
- OVERBURDEN STOCKPILE (OVB)
- TAILINGS MANAGEMENT FACILITY (TMF)
- DAM
- POND
- COLLECTION DITCH
- MINE FACILITIES / INFRASTRUCTURE
- ROAD
- PORTAL
- ADVANCED EXPLORATION SITE (AEX)
- ROCK QUARRY (Q) / SAND AND GRAVEL PIT (B)
- DIVERSION CHANNEL
- E EXHAUST VENT RAISE
- F FRESH AIR VENT RAISE
- TRANSMISSION LINE
- TAILINGS PIPELINE
- PASTE PLANT PIPELINE
- EFFLUENT / FRESH WATER PIPELINE CORRIDOR
- EFFLUENT DISCHARGE LOCATION

0 0.25 0.5 1

1:26,500 KILOMETRES

NOTE(S)

1. ALL LOCATIONS ARE APPROXIMATE
2. VMF: VIGGO MANAGEMENT FACILITY
3. ROM: RUN OF MINE ORE

REFERENCE(S)

1. CONTAINS INFORMATION LICENSED UNDER THE OPEN GOVERNMENT LICENCE - ONTARIO
2. CONTOURS ACQUIRED FROM 2022 LIDAR SURVEY.
3. PROPERTY BOUNDARY PROVIDED BY GREAT BEAR RESOURCES, AUGUST 2024.
4. ROADS INFORMATION PROVIDED BY GREAT BEAR RESOURCES, AUGUST 2022.
5. SITE PLAN BASED ON INFORMATION PROVIDED BY GREAT BEAR RESOURCES, DECEMBER 2024 / JUNE 2025.
6. COORDINATE SYSTEM: NAD 1983 UTM ZONE 15N

CLIENT
GREAT BEAR RESOURCES

PROJECT
GREAT BEAR PROJECT

TITLE
SITE PLAN (TOPOGRAPHY)

CONSULTANT

YYYY-MM-DD	2025-06-23
DESIGNED	---
PREPARED	MD
REVIEWED	---
APPROVED	---

PROJECT NO.	CONTROL	REV.	FIGURE
CA0031271	0001	A	1

IF THIS MEASUREMENT DOES NOT MATCH WHAT IS SHOWN, THE SHEET SIZE HAS BEEN MODIFIED FROM ANSI B

PATH: X:\CA\CAOAK300-OAK\MIS-FS1-Project\P2023\Projects\OME\MA2303_Kinross_Great_Bear_Env\7_GIS\Site_Plan\MXD\Site_Plan_Detailed_22_Topo_WSP.mxd PRINTED ON: 2025-06-23 AT: 1:41:48 PM

Figure 1-2: Site Plan

2.0 Points of Reception

Receptor locations of interest according to the Health Canada Noise Guideline [1] and MECP NPC-300 Guideline [2] include the following noise sensitive land uses, the majority of which are not present near the site (Figure 2-1):

- Permanent, seasonal, or rental residences;
- Hotels, motels and campgrounds;
- Schools, universities, libraries, and daycare centers;
- Hospitals and clinics, nursing / retirement homes; and
- Churches and places of worship.

The Project site and surrounding area are mainly characterized by gentle hills, forests, lakes, and rivers. Twenty-nine (29) Points of Reception (PORs) were identified and considered in this assessment. These consist of properties (such as residential, cabins, lodges and campsites) not owned by Great Bear Resources and vacant lots classified as non-mining land. A brief description of the PORs considered is listed below and summarized in Table 2-1.

The physical receptor location of residences and cottages were assessed at the plane of window. The unoccupied private properties were treated as vacant lots with the physical receptor location set at a height of 4.5 m above ground and placed at the center of the lot as required by the NPC-300. The locations of the modeled receptors with respect to the Project site are shown in Figure 2-1.

Table 2-1: Points of Reception Summary

Point of Reception ID	Point of Reception Description	UTM Coordinates NAD83 / zone 15N		Height Above Ground
		X (m)	Y (m)	(m)
POR1	Residence/Cabin/Lodge/Camp	456965	5639223	1.5
POR2	Residence/Cabin/Lodge/Camp	465624	5635180	1.5
POR3	Residence/Cabin/Lodge/Camp	465611	5635303	4.5
POR4	Residence/Cabin/Lodge/Camp	451915	5639044	1.5
POR5	Residence/Cabin/Lodge/Camp	451671	5630891	1.5
POR6	Residence/Cabin/Lodge/Camp	465139	5634939	1.5
POR7	Residence/Cabin/Lodge/Camp	467085	5631026	4.5
POR8	Residence/Cabin/Lodge/Camp	447866	5639124	4.5
POR9	Residence/Cabin/Lodge/Camp	451051	5639187	4.5
POR10	Residence/Cabin/Lodge/Camp	452237	5640215	4.5
POR11	Residence/Cabin/Lodge/Camp	458555	5640149	4.5
POR12	Residence/Cabin/Lodge/Camp	450762	5642634	4.5
POR13	Residence/Cabin/Lodge/Camp	447708	5641952	4.5
POR14	Residence/Cabin/Lodge/Camp	446385	5641886	4.5
POR15	Residence/Cabin/Lodge/Camp	446675	5642960	4.5
POR16	Residence/Cabin/Lodge/Camp	447897	5645762	4.5
POR17	Commercial	446102	5646375	4.5
POR18	Residence/Cabin/Lodge/Camp	465476	5635383	1.5
POR19	Empty Lot, Non-mining Land Area	446876	5642540	4.5
POR20	Residence/Cabin/Lodge/Camp	447444	5642109	4.5

Point of Reception ID	Point of Reception Description	UTM Coordinates NAD83 / zone 15N		Height Above Ground
		X (m)	Y (m)	(m)
POR21	Commercial	447961	5637216	4.5
POR22	Residence/Cabin/Lodge/Camp	469646	5628897	4.5
POR23	Residence/Cabin/Lodge/Camp	469091	5623932	4.5
POR24	Residence/Cabin/Lodge/Camp	470572	5630691	4.5
POR25	Residence/Cabin/Lodge/Camp	463047	5614594	4.5
POR26	Residence/Cabin/Lodge/Camp	467430	5631399	4.5
POR27	Residence/Cabin/Lodge/Camp	468788	5623627	4.5
POR28	Residence/Cabin/Lodge/Camp	465478	5635052	4.5
POR29	Residence/Cabin/Lodge/Camp	447525	5643902	4.5

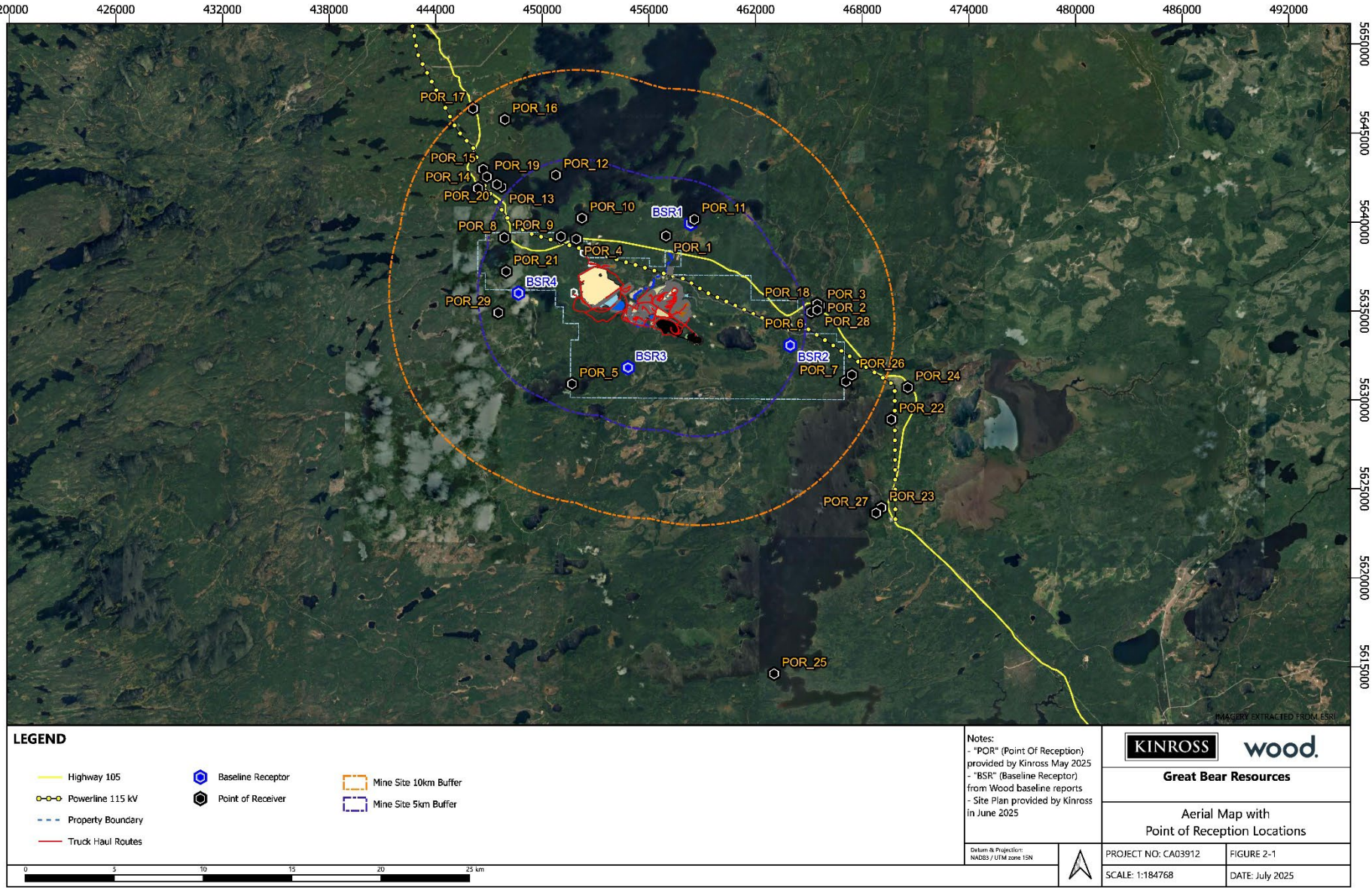

Figure 2-1: Aerial Map with Point of Reception Locations

3.0 Baseline Conditions

Two baseline noise monitoring campaigns were conducted to characterize the existing environmental noise for two different site conditions that are representative of the seasonal changes in the Project area (Wood 2022 [3] [4]; Wood 2023 [5] [6]). This minimizes uncertainty of the baseline measurements' validity. These measurements were used to assess Project's impact against the Health Canada Noise Guideline, presented in the subsequent sections.

Noise data was collected by Wood in 2022 and 2023, timed for when leaves were on the trees (termed "Leaves-On" program), and timed for when leaves were off the trees (termed "Leaves-Off" program). Each program occurred over a 7-day period at four monitoring locations. The monitors' coordinates were selected to be representative of potential PORs based on proximity and location to the Project, as shown in Figure 2-1.

The baseline sound levels were characterized using a variety of sound metrics including the hourly A-weighted Equivalent Sound Level ($L_{Aeq-1hr}$) and the Day-Night Sound Level (L_{dn}) values. A summary of the baseline levels obtained for both the Leaves-Off and Leaves-On programs are presented in Table 3-1. It is worth noting that:

- While the locations monitored during the Leaves-Off and Leaves-On programs were relatively consistent, the exact locations differed due to access constraints during the field work. Locations are provided in UTM zone 15N NAD83 as follows:
    - BSR1 (Baseline Receptor 1): Easting 458426, Northing 5639996;
    - BSR2 (Baseline Receptor 2): Easting 464002, Northing 5633047;
    - BSR3 (Baseline Receptor 3): Easting 454830, Northing 5631786; and,
    - BSR4 (Baseline Receptor 4): Easting 448092, Northing 5635837.
- The sound level metrics were collected in terms of one-hour values and data collected during periods of inclement weather conditions and site inspections were excluded from the baseline assessment. For each of the metrics the following processing was considered:
    - L_d – Denotes the daytime equivalent sound level from 07:00 to 23:00;
    - L_n – Denotes the nighttime equivalent sound level from 23:00 to 07:00;
    - L_{dn} – Denotes the arithmetic average of the day-night sound level calculated using the 1-hour L_{Aeq} data; The level was calculated for a 24 hr period with the night-time contributions adjusted by +10 dB; and,
    - The daytime and nighttime periods for calculation of L_{dn} as per the Health Canada Guideline are defined as: daytime period from 07:00 to 23:00 and nighttime period from 23:00 to 07:00.

Details of the baseline monitoring field programs as well as the collected data can be found in the baseline reports (Wood 2022 [3] [4]; Wood 2023 [5] [6]) under separate covers.

Table 3-1: Baseline Sound Levels

Monitoring Location	Baseline Sound Metrics Collected (dBA)											
	2022						2023					
	Leaves-On Program			Leaves-Off Program			Leaves-On Program			Leaves-Off Program		
	L_d	L_n	L_{dn}	L_d	L_n	L_{dn}	L_d	L_n	L_{dn}	L_d	L_n	L_{dn}
BSR1	40	31	42	33	28	36	45	30	44	34	32	39
BSR2	40	29	39	33	24	37	43	28	41	34	32	38
BSR3	34	35	35	34	26	36	40	33	42	31	27	34
BSR4	42	29	42	34	25	36	42	25	40	36	29	38

4.0 Sound Source Summary

4.1 Overview

The greatest noise emissions from the Project are expected to originate from equipment and infrastructure used for construction and operational purposes. This includes stationary equipment and mobile equipment fleet operating at different areas of the mine, equipment used for production above ground at the open pits, ventilation systems and noise transmission through walls, roofs and ventilation openings of major infrastructures.

The construction phase is expected to last for a duration of three years. During this phase, open pit mining at the Viggo pit will be conducted to source clean NPAG mine rock for construction purposes, and stockpile ore. The AEX activities are expected to continue during the construction phase of the Project and then stop once mining operations start.

The underground operations are expected to commence in Year 1. Process plant is expected to be commissioned in mid Year -1 with the operations ramping up to sustain an ore processing rate of 15,000 tpd. The main source of ore at the start of the operations phase will be from open pit operations, supplemented by underground mining until Year 8. After Year 8, most of the ore will be provided by the underground operations, which will be supplemented by stockpiled ore until Year 26. Production is expected to slow down leading up to Year 26 followed by active decommissioning and closure for a period of three years when there would be no mining and reduced equipment activity.

The Project is expected to move a maximum of 120,000 tonnes of material per day (tpd) during the life of the mine including both the construction and operations phases.

The expected mine life was divided into four periods to evaluate noise emissions throughout the major stages of the Project: construction phase (3 years), operations phase – peak production (8 years), operations phase – underground production (18 years) and active closure phase (3 years). The types of equipment and equipment volume vary for each evaluated phase of the Project. The equipment list considered for each period in this modelling report has been developed based on the information provided by Great Bear Resources.

Given the current stage of the Project, the information with respect to the equipment selections are preliminary and subject to change. Sound emission values for the equipment were determined using the following sources:

- Manufacturer's data based on the preliminary equipment selections,
- Empirical calculations based on equipment power ratings,
- Wood's sound power level database, or
- Reference levels published in the Federal Highway Administration (FHWA) Construction Noise Handbook (U.S. Department of Transportation, 2006) [7].

For a conservative assessment, all equipment were modelled to operate simultaneously to evaluate the worst-case scenario. Equipment usage factors provided by Great Bear Resources Project team were implemented to account for the percentage of time the equipment is expected to operate during the work hours. The only exception to the latter were the quantity of haulage trucks, which was obtained using yearly tonnage movement data from Great Bear Resources modified to account for a specific maximum daily material movement.

Great Bear Resources has identified the facility, equipment, routing locations, and the noise control measures for specific noise sources that provided the basis for the model. The noise sources planned to have control measures are:

- Return Air Raises (RARs) and Discovery Fresh Air Raise (FAR) ventilation fans (see Table 4-1 lists the fans with and without noise control measures and their respective site location);
- Exhausts and casings for the diesel generators with capacity above 50 kW (see Table 4-2 that outlines the different generator types with noise control measures); and,
- 5 MW and 1.3 MW Natural Gas generators casings and exhausts.

Further information on equipment with planned measures are listed in Table A-1 in Appendix A,.

Table 4-1: Mine Ventilation Systems

Item	Fan Location	Type	Modelled Sound Power Level, dBA	Noise Control Measure Included (Y/N)	UTM Coordinates	
					Easting (m)	Northing (m)
1	Discovery	RAR	109.7	**Y**	455254	5635069.5
2	Discovery	FAR	111.7	**Y**	455416.2	5634887.5
3	LP	RAR 1	116.4	**Y**	456411.6	5634335
4	LP	RAR 2	114.3	**Y**	457914.3	5633559
5	LP - HNG/LMB	FAR 1	129.3	N	456756.6	5633595.3
6	LP - HNG/LMB	FAR 2	129.7	N	456756.6	5633595.3
7	HNG/LMB	RAR	107.7	**Y**	456248.1	5633604.1
8	Viggo	RAR	104.7	**Y**	458286.2	5633456.7
9	Viggo	FAR	110.1	N	458302.7	5633317.5
10	AEX South Portal	Intake	128.5	N	455484.6	5634515.3

Table 4-2: Mitigated Generator Noise Sources

Item	Mechanical Power Rating	Max. Quantity Modelled (1)	Generator Type	Modelled Exhaust Sound Power Level, dBA	Modelled Casing Sound Power Level, dBA
1	50 kW	1	Diesel Reciprocating	90.6	100.4
2	100 kW	17	Diesel Reciprocating	93.9	102.3
3	200 kW	1	Diesel Reciprocating	94.3	100.4
4	250 kW	4	Diesel Reciprocating	103.9	96.7
5	500 kW	6	Diesel Reciprocating	96.8	97.0
6	800 kW	1	Diesel Reciprocating	99.4	125.4
7	1 MW	1	Diesel Reciprocating	107.6	128.5
8	1.3 MW	7	Natural Gas Reciprocating	107.2	107.2
9	2.25 MW	4	Diesel Reciprocating	100.8	116.7
10	5 MW	9	Natural Gas Reciprocating	104.3	117.0

Note:
1. Outlines the maximum quantity of generators used in any model variant assessed.

Source details for each assessed modelling period are discussed in the subsequent sections. A summary of the main sound sources including sound power levels, sound characteristics, and any applicable planned noise control measures are provided in Appendix A.

4.2 Construction Phase

The construction phase modeling assesses the potential impact from the construction of major onsite infrastructure simultaneous with mining activities at Viggo pit and the AEX. Quarries (abbreviated Q on Figure 1-2) and sand and gravel sources (abbreviated BS on Figure 1-2) within the claim limits will be extracted to facilitate construction of the infrastructure in terms of sourcing aggregate (rock, and sand and gravel). The construction equipment at the LP Central

pit is expected to focus on pre-stripping overburden and building the required open pit infrastructure. The production drills were modelled inside the pits and accompanied by loader and shovel which are expected to operate adjacent to the production drills in the pit. The blaster's truck and loader are also expected to be used around the drills in the pit in preparation for blasting. The dewatering pumps were modelled for pit dewatering and in the vicinity of dams and collection ponds scattered around the Project site.

It is currently anticipated that the combined underground mine ventilation system will consist of 12 main fan installations, 10 of which are located on the surface and two are located underground (booster fans). The ventilation system for the Project is expected to implement a push-pull system that will include the supply fans and suction/exhaust fans installed on the surface. Each ventilation raise will be composed of an arrangement of two surface fans operating in parallel. Five intake raises will be connected to direct air heater units capable of increasing the intake air temperature to mitigate the risk of ice buildup and avoid airflow blockage and freezing of infrastructure during cold weather conditions. Installation of the ventilation systems will start with the existing AEX portal to support early development, followed by installation at other key mining zones with locations and coordinates summarized in Table 4-1.

The ventilation raises considered for the Construction Phase were modelled at the AEX Portal, LP Return Air Raise 2 (RAR 2) and at the LP Hinge and Limb zones Fresh Air Raise 1 (FAR 1). The sound power level of the ventilation system was assumed to be dominated by the surface fans which were modelled above ground in this assessment for a conservative estimate of the predictable worst-case impact.

The key noise sources associated with the construction phase, categorized based on the expected activities, along with their sound characteristics are provided in Table A-1 (see Appendix A). During this phase, the Project site is planned to mainly operate dayshift for 12 hours per day, 7 days per week.

Haulage truck movements were modelled along the main access road, haul roads and existing roadway around the Project site, primarily between stockpiles, aggregate sources and open pits. The haulage truck traffic for the construction phase estimated for the assessment is presented in Table 4-3. The haulage truck movements were based on the worst-case metric tonnes material movement of 120,000 tpd during a given year, and converted into an hourly passby count for each haulage route based on capacity of each truck and the required movement of material for each route. Truck routes for all phases are highlighted in Figure 4-1.

Table 4-3: Haul Truck Traffic – Construction

Route	From	Destination	Truck Passbys per Hour [(1)]	Truck Type (US tons)
Main Production Routes (continuous operation)				
R1	Viggo pit	MRS (PAG)	46.2	777 100t truck
R2	Viggo pit	MRS (NPAG)	23.6	777 100t truck
R2B	LP Central	OVB1	36.2	785 150t truck
R3	Viggo pit	LGO1	1.4	785 150t truck
R4	Viggo pit	LGO2	0.8	785 150t truck
R5	Viggo pit	ROM	0.4	785 150t truck
R6	AEX Portal	ROM	0.6	785 150t truck
R7	AEX Portal	AEX NPAG	0.8	40t articulated
R8	AEX Portal	AEX PAG	4.0	40t articulated
R40	AEX PAG	MRS (PAG)	1.6	785 150t truck
R41	AEX NPAG	MRS (NPAG)	0.4	785 150t truck
Construction Material Routes (daytime only)				
R9	South Dam	OVB3	12.6	40t articulated

Route	From	Destination	Truck Passbys per Hour [1]	Truck Type (US tons)
R11	TMF Pond Dam	OVB3	1.0	40t articulated
R12	Q1	OVB6	0.6	40t articulated
R13	Q2	OVB6	0.4	40t articulated
R14	BS3	OVB5	0.4	40t articulated
R15	BS3B	OVB5	0.4	40t articulated
R16	CWP Dam	OVB1	0.8	40t articulated
R17	BS3	North Dam	0.4	777 100t truck
R18	Q2	North Dam	1.2	777 100t truck
R19	BS3	South Dam	0.6	777 100t truck
R20	Q1	South Dam	16.0	777 100t truck
R21	BS3	TMF Pond Dam	1.0	777 100t truck
R22	Q1	TMF Pond Dam	3.6	777 100t truck
R23	OVB1	CWP Dam	0.4	777 100t truck
R24	MRS (NPAG)	CWP Dam	1.8	777 100t truck
R25	Diversion Channel #2	MRS (PAG)	0.2	777 100t truck
R26	OVB1	Diversion Channel #2	0.6	777 100t truck
R27	MRS(NPAG)	Diversion Channel #2	1.4	777 100t truck
R28	Tailings Pipeline	OVB3	4.0	40t articulated
R29	BS1	Tailings Pipeline	1.2	777 100t truck
R30	MRS (NPAG)	Tailings Pipeline	0.4	777 100t truck
R31	BS1	Primary Crusher	1.2	777 100t truck
R32	MRS (NPAG)	Primary Crusher	1.2	777 100t truck
R33	OVB2	Dixie Creek Flood Protection Berm	0.6	777 100t truck
R34	MRS (NPAG)	Haul Roads	20.2	777 100t truck
R35	Haul Roads	OVB2	2.6	777 100t truck
R36	BS1	Haul Roads	2.0	777 100t truck
R37	MRS (NPAG)	ROM	0.2	785 150t truck
R38	BS1	Infrastructure Pad	0.8	785 150t truck
R39	MRS (PAG)	OVB2	4.4	40t articulated

Notes:

1. The presented number of hourly trucks passbys are considering the number of round trips needed to move the material during the worst-case predictable hour to achieve the Project's maximum design capacity of 120,000 tpd of material movement.

4.3 Operations Phase – Peak Production

Once the major mine infrastructure is in place, mining activities are expected to ramp up to support achievement of an ore processing rate of 15,000 tpd. Peak-production period is defined as the time period when the underground operations and open pit mining at the LP Central pit is underway with a fully operational process plant. In terms of modelling this period, the major change from the construction phase is increased activity in the open pit area along with operational noise from the major mine infrastructure in the form of noise breakout/leakage from buildings and nine (9) 5-MW natural gas generators serving as the power plant for the mine.

Noise radiated from the buildings can be defined as the transmission of sound through building ventilation openings, walls and roof due to the operation of mechanical equipment indoors. In contrast to the construction equipment modelled in the construction phase at the locations of the mine infrastructure, the noise sources in those areas were replaced by buildings radiating acoustic energy from all visible facades in the Peak-Production period. Mechanical equipment lists for these buildings were provided by Great Bear Resources engineering team. The buildings that were

identified with high acoustic energy radiation was: the Process Plant, the Primary Crusher Building, the Pebble Crusher Transfer Tower and the Paste (Backfill) Plant. The 5-MW natural gas generators would be housed in their own modular enclosures near the Main Substation. The significant noise sources associated with major mine infrastructure are summarized in Table 4-4. Table 4-5 summarises the assumed mitigated sound power levels of the 5-MW natural gas generator casings and exhausts used in the model.

For conservatism, the calculations for noise breakout/leakage from buildings is based on the following assumptions: noise breakout energy is distributed among all facades and roof based on the surface area, major noise sources are located at the center of the building, buildings' interior surfaces and machine surfaces are acoustically hard (reflective), façades and roof sound transmission losses were calculated based on details provided by Great Bear Resources, and buildings have openings that allow for air changes depending on the interior activities. Noise emissions from other mine infrastructure such as the Main Substation, CRF Plant and the Explosives Emulsions and Magazine Storage buildings were also considered. Octave band sound power levels of the noise sources associated with these areas are summarized in Table 4-6. Locations identified in the site plan as Tailings Thickener and Water Treatment Plant along with camping and administration complexes were predicted to be insignificant sources of noise.

The ventilation raises considered for the Peak Production period were modelled at the AEX Portal, LP RAR 1, LP RAR 2, Viggo RAR, Viggo FAR, and at the LP Hinge and Limb zones FAR 1. The vent raises were modelled as point sources with continuous and simultaneous operation to evaluate the worst-case impact at the identified PORs.

The key noise sources associated with Peak-Production period, categorized based on different activities expected to be conducted, along with their sound characteristics are provided in Table A-2 (see Appendix A). During this period, the Project site is planned to operate 24 hours per day, 7 days per week. Haulage truck volume for this period is presented in Table 4-7 with the amount of truck by-pass expected from LP Central pit to the stockpiles and the crusher for ore processing.

Table 4-4: Mine Infrastructure –Noise Sources Summary

Building	Source	QTY	Octave Band Frequency [Hz] (1)									Overall [dBA]
			31.5 Hz	63 Hz	125 Hz	250 Hz	500 Hz	1000 Hz	2000 Hz	4000 Hz	8000 Hz	
Process Plant	SAG Mill	1	108	116	109	109	107	105	101	95	86	**110**
	Ball Mil	1	106	101	107	105	104	103	103	102	99	**110**
	Cyclone Feed Pump	1	95	97	99	99	99	100	99	96	89	**105**
	CIP Discharge Pump	1	98	98	100	102	105	105	104	99	92	**110**
	Plant and Instrument Air Compressor	1	100	96	101	100	98	101	106	103	96	**110**
	Linear Vibratory Screen	3	100	100	94	91	91	89	87	83	78	**94**
	Reclaim Water Pump 1	1	97	97	100	102	105	105	104	99	91	**110**
	SAG Mill Discharge Screen	1	100	100	94	91	91	89	87	83	78	**94**
	Gravity Scalping Screens	2	100	100	94	91	91	89	87	83	78	**94**
	Carbon Safety Screens	2	100	100	94	91	91	89	87	83	78	**94**
	Trash Screens	2	100	100	94	91	91	89	87	83	78	**94**
Primary Crusher Building	Rock Breaker	1	117	121	124	121	111	108	103	98	92	**116**
	Primary Crusher	1	-	125	134	125	116	110	110	108	111	**123**
	Vibrating Grizzly Screen	1	100	100	94	91	91	89	87	83	78	**94**
Transfer Tower	Pebble Crusher	1	-	124	133	124	115	109	109	107	110	**121**

Building	Source	QTY	Octave Band Frequency [Hz] (1)									Overall [dBA]
			31.5 Hz	63 Hz	125 Hz	250 Hz	500 Hz	1000 Hz	2000 Hz	4000 Hz	8000 Hz	
Paste Backfill Plant	Filter Feed Pump	1	83	84	86	88	91	91	90	85	77	**96**
	Filtrate Pump 1	1	81	81	84	86	88	89	87	82	75	**93**
	Vortex Mixer Feed Pump	1	83	84	86	88	91	91	90	85	77	**96**
	Vacuum Pump 1	1	99	99	102	104	106	107	106	101	93	**111**
	Filter Cake Conveyor (2)	1	79	78	79	77	75	76	75	71	64	**81**
	Paste Mixer	1	91	93	95	95	95	95	95	92	85	**101**
	Hydraulic Power Pack	4	98	99	100	100	100	100	100	99	97	**106**
	Vortex Mixer Screw Conveyor (2)	1	68	67	68	66	65	66	64	60	53	**70**
	Air Compressor	1	93	89	94	93	91	94	99	96	89	**102**
	Overhead Crane	1	98	98	87	91	86	86	87	80	76	**92**
	Paste Area Sump Pump	1	83	84	86	88	91	91	90	85	77	**96**
	Filter Area Sump Pump	1	83	84	86	88	91	91	90	85	77	**96**
	Filter Area Sump Pump	1	83	84	86	88	91	91	90	85	77	**96**
	High Pressure Cleaning Pump	1	76	76	78	80	83	83	82	77	70	**88**
	Filtrate and Spillage Return Pump	1	78	78	81	83	85	86	84	80	72	**90**
	Hose-Up Water Pump	1	78	78	81	83	85	86	84	80	72	**90**
	Water Services Pump	1	83	84	86	88	91	91	90	85	77	**96**
	Gland Water Pump	1	75	76	78	80	82	83	81	76	69	**87**

Notes:
1. Unweighted (linear) sound power levels.
2. Sound power levels for conveyors are presented as a function of unit length.

Table 4-5 Natural Gas Generators – Noise Source Summary

Building	Source	QTY	Octave Band Frequency [Hz] (1)									Overall [dBA]
			31.5 Hz	63 Hz	125 Hz	250 Hz	500 Hz	1000 Hz	2000 Hz	4000 Hz	8000 Hz	
Natural Gas Generators	Casing (2)	9	105	111	114	112	108	108	108	112	111	**117**
	Exhaust (2)	9	-	119	109	103	103	95	94	95	86	**104**

Notes:
1. Unweighted (linear) sound power levels in dB.
2. Natural gas generators with reciprocating engines. The sound power levels presented are of mitigated casing noise. The mitigated exhaust is assumed to be located on top of the engine casings.

Table 4-6: Auxiliary Mine Infrastructure – Noise Sources Summary

Area	Source	QTY	Octave Band Frequency [Hz] (1)									Overall [dBA]
			31.5 Hz	63 Hz	125 Hz	250 Hz	500 Hz	1000 Hz	2000 Hz	4000 Hz	8000 Hz	
Main Substation	Main Power Transformer 1	1	90	96	98	93	93	87	82	77	70	**93**
	Main Power Transformer 2	1	92	98	100	95	95	89	84	79	72	**95**

Area	Source	QTY	Octave Band Frequency [Hz] (1)									Overall [dBA]
			31.5 Hz	63 Hz	125 Hz	250 Hz	500 Hz	1000 Hz	2000 Hz	4000 Hz	8000 Hz	
	Distribution Transformer	2	54	60	62	57	57	51	46	41	34	**57**
Cemented Rockfill (CRF) Plant	Air Compressor	1	83	79	84	83	81	84	89	86	79	**93**
	Aggregate Feeder	1	100	100	94	91	91	89	87	83	78	**94**
	CRF Mixer	1	98	98	101	103	106	106	105	100	92	**111**
	Raw Water Pump	1	81	81	84	86	88	89	87	82	75	**93**
	High Pressure Cleaning Pump	1	83	84	86	88	91	91	90	85	77	**96**
	Sump Pump	1	79	79	82	84	86	87	85	80	73	**91**
	Aggregate Transfer Conveyor (2)	1	88	87	88	86	85	86	84	80	73	**90**
	Cement Screw Conveyor (2)	1	68	67	68	66	65	66	64	60	53	**70**
	CRF Plant Dust Collector	1	103	103	97	94	93	96	98	95	93	**103**
	Rock Crusher	1	-	118	127	118	109	103	103	101	104	**115**
Emulsions and Magazine Storage	Transformer	1	63	69	71	66	66	60	55	50	43	**66**
	Building HVAC (Inlet)	1	101	94	91	91	91	89	86	83	77	**94**
	Building HVAC (Outlet)	1	88	86	85	89	90	82	77	68	61	**89**

Notes:

1. Unweighted (linear) sound power levels in dB.
2. Sound power levels for conveyors are presented as a function of unit length.

Table 4-7: Haul Truck Traffic – Peak Production

Route	From	Destination	Truck Passbys per Hour (1)	Truck Type (US tons)
Main Production Routes (continuous operation)				
UOR1	LP Central	OVB1	6.4	785 150t truck
UOR2	LP Central	MRS (PAG)	45.6	785 150t truck
UOR3	LP Central	MRS (NPAG)	6.2	785 150t truck
UOR4	LP Central	Crusher	5.2	785 150t truck
UOR5	LP Central	LGO1	1.2	785 150t truck
UOR6	LP Central	LGO2	2.2	785 150t truck
UOR7	LGO1	Crusher	0.2	785 150t truck
UOR8	LGO2	Crusher	0.2	785 150t truck
UOR9	AEX Portal	Crusher	5.0	785 150t truck
UOR10	AEX Portal	MRS (PAG)	1.0	785 150t truck
UOR11	AEX Portal	MRS (NPAG)	0.4	785 150t truck
Construction Material Routes (daytime only)				
UOR12	North Dam	OVB5	0.2	40t articulated
UOR13	South Dam	OVB4	0.4	40t articulated
UOR14	South Dam - spillway	South Dam	2.6	40t articulated
UOR15	West Dam	OVB6	0.2	40t articulated
UOR16	TMF Facility	North Dam	0.8	777 100t truck
UOR17	BS3	North Dam	0.2	777 100t truck
UOR18	MRS (NPAG)	North Dam	2.4	777 100t truck

Route	From	Destination	Truck Passbys per Hour (1)	Truck Type (US tons)
UOR19	TMF Facility	South Dam	1.2	777 100t truck
UOR20	BS3	South Dam	0.4	777 100t truck
UOR21	MRS (NPAG)	South Dam	10.6	777 100t truck
UOR22	TMF Facility	West Dam	0.2	777 100t truck
UOR23	BS3	West Dam	0.2	777 100t truck
UOR24	MRS (NPAG)	West Dam	1.6	777 100t truck
UOR25	MRS (NPAG)	LP Central Pit	1.2	777 100t truck
UOR26	MRS (NPAG)	Road Base	1.4	777 100t truck
UOR27	TMF Facility	North Dam	1.8	40t articulated
UOR28	TMF Facility	South Dam	3.0	40t articulated
UOR29	TMF Facility	West Dam	0.4	40t articulated
UOR30	MRS (PAG)	OVB2	1.0	40t articulated

Notes:

1. The presented number of hourly trucks passbys are considering the number of round trips needed to move the material during the worst-case predictable hour to achieve the Project's maximum design capacity of 120,000 tpd of total material movement.

4.4 Operations Phase – Underground Production

After Year 8, mining and other activities are expected to stop in the LP Central pit above ground with the majority of the process plant feed coming from the underground mine and stockpiles. The modelled sources for this period are similar to those of the Peak-Production period, with changes expected to the amount of material moved by haul trucks as the years progress. Equipment such as drills and blasting loaders are still planned to be operational at the quarries. The stockpiles will be maintained by the track dozer, grader and compactor. Light plants have been modelled to be operational during the evening and nighttime in the most active areas of the Project site.

The majority of the material movement using the haulage trucks is expected to be between the AEX portal, crusher and the stockpiles. The truck movement considered for this period is summarized in Table 4-8. The traffic counts are based on the metric tonnes of mine rock and ore predicted for each year of mining operation provided by the Great Bear Resources engineering team with the total amount of material movement projected to be up to 120,000 tpd.

The ventilation raises considered for the Underground Production period were modelled at similar locations to the Peak-Production period with the addition of vent raises at the following locations: Discovery RAR, Discovery FAR, LP Hinge and Limb zones FAR 2 and the Hinge and Limb zones RAR. All ventilation systems identified in Table 4-1 were essentially modelled to account for the worst-case impact of these fans based on continuous simultaneous operation.

The key noise sources associated with this period, categorized based on different activities expected to be conducted, along with their sound characteristics are provided in Table A-3 (see Appendix A). During this period, the Project site is planned to operate 24 hours per day, 7 days per week.

Table 4-8 Haul Truck Traffic – Underground Production

Route	From	Destination	Truck Passbys per Hour (1)	Truck Type (US tons)
Main Production Routes (continuous operation)				
UGR1	LGO1	Crusher	4.4	785 150t truck
UGR2	LGO2	Crusher	4.2	785 150t truck
UGR3	AEX Portal	Crusher	22.0	785 150t truck
UGR4	Shaft	Crusher	0.4	785 150t truck
UGR5	AEX Portal	MRS (PAG)	0.2	785 150t truck
UGR6	AEX Portal	NMRS (NPAG)	1.6	785 150t truck

Route	From	Destination	Truck Passbys per Hour (1)	Truck Type (US tons)
Construction Material Routes (daytime only)				
UGR7	North Dam	OVB5	0.4	40t articulated
UGR8	South Dam	OVB3	2.0	40t articulated
UGR9	West Dam	OVB6	0.8	40t articulated
UGR10	TMF Facility	North Dam	1.6	777 100t truck
UGR11	BS3	North Dam	0.6	777 100t truck
UGR12	MRS (NPAG)	North Dam	9.6	777 100t truck
UGR13	TMF Facility	South Dam	3.0	777 100t truck
UGR14	BS3	South Dam	1.0	777 100t truck
UGR15	MRS (NPAG)	South Dam	47.2	777 100t truck
UGR16	TMF Facility	West Dam	2.2	777 100t truck
UGR17	BS3	West Dam	0.8	777 100t truck
UGR18	MRS (NPAG)	West Dam	7.2	777 100t truck
UGR19	MRS (NPAG)	Road Base	3.8	777 100t truck
UGR20	TMF Facility	North Dam	3.8	40t articulated
UGR21	TMF Facility	South Dam	7.2	40t articulated
UGR22	TMF Facility	West Dam	5.2	40t articulated
UGR23	OVB1	MRS (PAG)	41.8	777 100t truck

Notes:

1. The presented number of hourly trucks passbys are considering the number of round trips needed to move the material during the worst-case predictable hour to achieve the Project's maximum design capacity of 120,000 tpd of total material movement.

4.5 Closure Phase

The underground pits will be in operation until 2055 followed by a period of three years of active decommissioning and closure. This phase is expected to have a small number of equipment fleet working on the site completing reclamation activities. Major mine infrastructure is expected to be decommissioned during this phase. Only the Power Plant will be in operation utilizing three of the initial eight natural gas generators to facilitate the closure of the Project. The other noise sources in this phase consist of auxiliary diesel generators and HVAC units at the camp buildings. During the passive closure period, and the final year of infrastructure removal (final closure period) there will be minimal operations and noise generated.

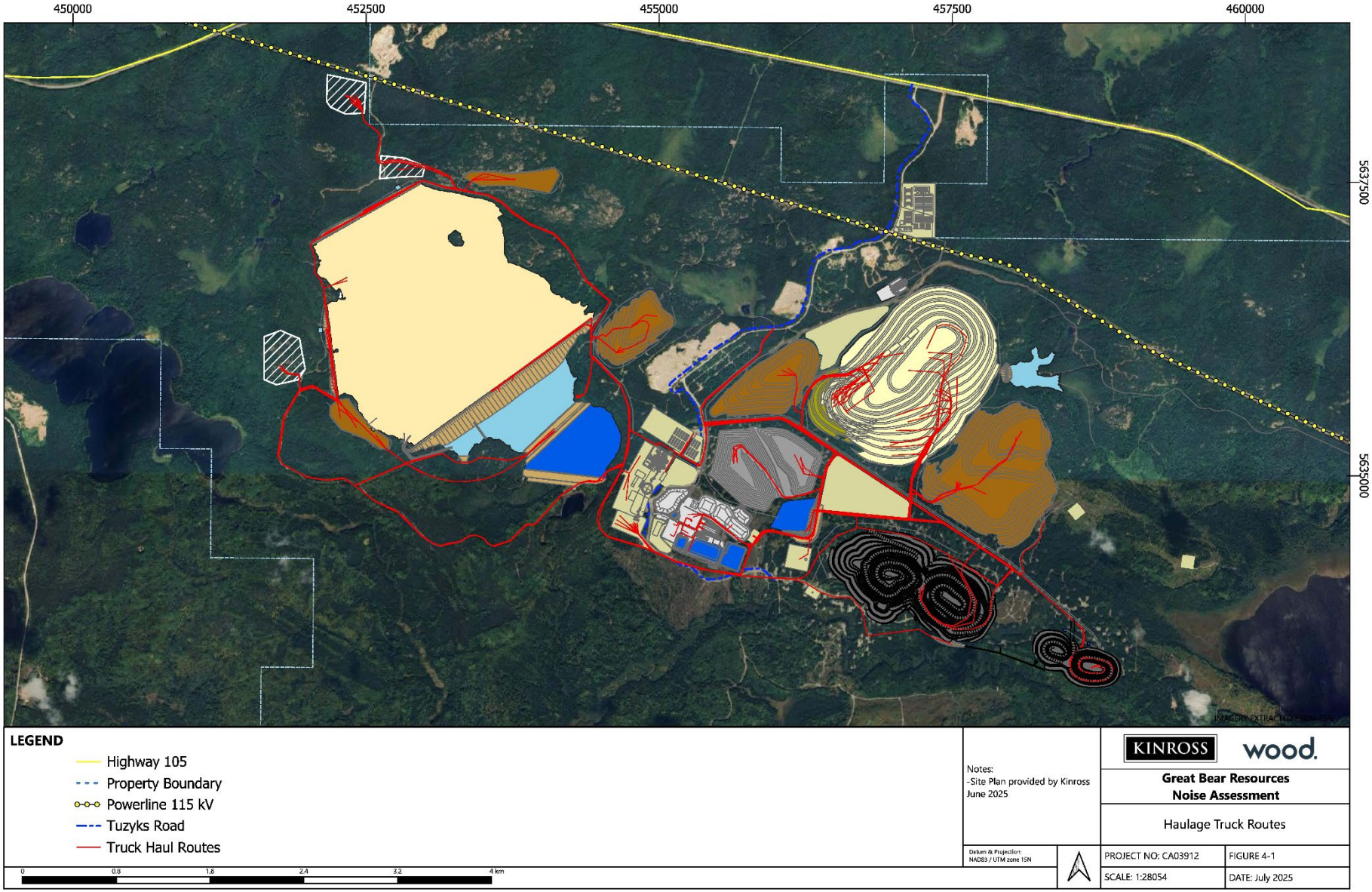

Figure 4-1: Haulage Truck Routes

5.0 Applicable Guidelines

5.1 Provincial Noise Guideline

The applicable provincial noise guideline used to assess the Project is the MECP Publication NPC-300, *Environmental Noise Guideline - Stationary and Transportation Sources - Approval and Planning* (MECP, 2013) [2]. The guideline establishes four classes of acoustical environments based on the ambient background sound environments and establishes class specific sound level limit criteria. The MECP classes as per NPC-300 are described below:

- Class 1 Area: an area with an acoustical environment typical of a major population center, where the background sound level is dominated by the urban hum.
- Class 2 Area: an area with an acoustical environment that has qualities representative of both Class 1 and Class 3 Areas. Class 2 areas are characterized by the absence of urban hum, they have a relatively low ambient sound level, during early evening (i.e., between 19:00 and 23:00 hours) which is typically present within Class 1 areas during the same time period.
- Class 3 Area: a rural area with an acoustical environment dominated by natural sounds having little or no road traffic. Examples are small communities with populations of less than 1,000, agricultural areas, rural recreational areas, such as a cottage or a resort area, and wilderness areas.
- Class 4 Area: an area that would otherwise be defined as Class 1 (urban) or Class 2 (suburban) which has relaxed sound level criteria compared to any other Class. This Class is intended to allow new noise-sensitive developments within or adjacent to industrial areas and to promote urban intensification. In contrast to the other classes this one must be implemented by the local land use planning authority to be recognized by the MECP (MECP 2013).

The area surrounding the Project is mainly characterized by forests, lakes, and rivers. The land use around the Project consists of recreational activities by locals and tourists (including fishing, camping, and hunting), with no active agricultural land use. Therefore, the area is best described as Class 3 in accordance with the area classifications defined within the guideline.

5.1.1 Steady Sound Criteria

NPC-300 states that non-impulsive (steady) one-hour sound levels (L_{eq-1hr}) from stationary sound sources in Class 3 Areas shall not exceed that of the background, where the background (typically caused by natural sound sources) is considered to be:

- The higher of the 45 dBA MECP exclusionary sound level limit or background sound at both outdoor and plane of window receptor locations during day-time hours (07:00 to 19:00 h).
- The higher of the 40 dBA MECP exclusionary sound level limit or background sound at both outdoor and plane of window receptor during the early evenings (19:00 to 23:00 h), and at the plane of window during night-time (23:00 to 07:00 h).

The guidelines also stipulate that the assessment considers the potential noise impact during a predictable worse case hour of operation, which is defined as a situation when the normally busy activity of the sources coincides with a low hourly background sound level.

Based on a review of the baseline sound levels presented in Section 3.0 and the above discussion, the MECP's exclusionary sound limits were selected for this assessment.

5.1.2 Impulsive Sound Criteria

For impulsive sound, other than Quasi-Steady Impulsive Sound, from a stationary source, the sound level limit at a POR expressed in terms of the Logarithmic Mean Impulse Sound Level (L_{LM}) is the higher of the applicable exclusion limit or the background sound level for that POR. Impulsive sources are categorized depending on the number of impulses in a period of one-hour, with the most-restrictive limit given to sources with more than 9 impulses per hour. NPC-300 stipulates that impulsive sound levels from stationary noise sources with 9 or more impulses per hour in a Class 3 area shall not exceed:

- The higher of the 45 dBAI MECP exclusionary sound level limit or the existing background sound level at *both outdoor and plane of window receptor locations* during daytime hours (0:700 to 19:00);
- The higher of the 40 dBAI MECP exclusionary sound level limit or the existing background sound level at both *outdoor and plane of window receptor locations* during early evening hours (19:00 to 23:00); and
- The higher of the 40 dBAI MECP exclusionary sound level limit or the existing background sound level at the *plane of window receptor locations* during night-time hours (23:00 to 07:00).

Since there are more than nine impulses expected in any 1-hour period, the above-mentioned limits are applicable for the impulse noise assessment presented in this report.

5.1.3 Emergency Equipment Testing Criteria

The NPC-300 guideline states that for noise produced by emergency equipment operating in non-emergency operations (e.g., routine testing of emergency generators), the sound level limits are 5 dB greater than the sound level limits presented in Section 5.1. Noise produced by emergency equipment operating in non-emergency operations shall be assessed independently of all other stationary noise sources. In the worst-case scenario, it can be assumed that all emergency equipment is being tested simultaneously.

5.2 Federal Noise Guideline

The Health Canada (HC) *Guidance for Evaluating Human Health Impacts in Environmental Assessment: Noise* (Health Canada, 2017) [1] provides guidance on predicting health risks related to levels and/or types of noise predicted in federal impact assessment of proposed major resource and infrastructure projects (such as mines, dams, pipelines and other projects). In the context of an Impact Assessment, the Health Canada Noise Guideline considers the noise impacts associated with hearing loss, sleep disturbance, interference with communication, noise complaints and a high level of annoyance. A brief description of the impacts associated with noise as discussed in comparison to this guideline is presented in Section 5.2.1 and the noise criteria used for the present assessment is summarized in Section 5.2.2.

5.2.1 Examples of Potential Impacts Associated with Noise

5.2.1.1 Noise-Induced Hearing Loss

The risk of hearing loss is generally considered to correspond to two factors: the sound level and duration of daily exposure. The time period before damage occurs shortens as the average sound level increases (World Health Organization; (WHO, 1999) [8]. Regardless of the exposure duration, there is no known risk of permanent hearing loss associated with sound levels below 70 dBA (Health Canada, 2017).

While hearing loss impacts are not typically considered in impact assessments as project-related sound levels rarely reach these high levels at potential receptors, when considering impulsive noise such as from blasting, pile driving and jack hammering, Health Canada suggests the WHO recommendation be followed to avoid hearing loss resulting from impulsive noise exposure and that peak sound pressures not exceed 140 Z-weighted decibels (dBZ) (Health Canada 2017; WHO 1999).

5.2.1.2 Noise-Induced Sleep Disturbance

Health Canada considers the guidelines and recommendations of the WHO regarding sleep disturbance for quiet rural areas (Health Canada 2017). Table 5-1 provides a summary of the guideline levels presented in Health Canada Noise Guideline.

Table 5-1: Guidelines for Noise-Induced Sleep Disturbance

Noise Metric	Receptor Location (1)	
	Indoor	Outdoor
L_{Aeq} (2)	30 dBA	45 dBA
L_{AMax} (3)	45 dBA	60 dBA
L_n (4)	N/A	40 dBA

Notes:

1. An outdoor-to-indoor transmission loss of 15 dB is assumed for buildings with windows at least partially open.
2. The guideline level is defined with respect to L_{Aeq} for continuous noise during the sleep period.
3. The guideline level is defined with respect to individual noise events and the specified L_{Amax} level should not be exceeded by more than 10-15 times per night.
4. The guideline level is defined with respect to L_n as an annual average.

5.2.1.3 Interference with Speech Comprehension

The recommended sound levels to maintain good speech comprehension are defined with respect to indoors and outdoors. Based on reviews of relevant studies, Health Canada recommends that the daytime noise due to project activities as measured indoors should be maintained below 40 dBA to sustain adequate speech comprehension, and below 55 dBA as measured outdoors for outdoor speech comprehension (Health Canada, 2017).

5.2.1.4 Indicator of Potential Human Health Effects

Health Canada considers certain community reactions to project-related noise represent potential indicator of adverse health (Health Canada 2017). Two of the most common community reactions include complaints and annoyance. When the outdoor day-night sound levels (L_{dn}) from project-related sound levels reaches 62 dBA, it is considered that widespread complaints can, or are likely to, occur. When project-related sound levels are greater than 75 dBA (L_{dn}), complaints can be expected to include strong appeals to authorities to stop noise.

The percentage of highly annoyed (%HA) is also an important factor to consider for both community complaints and long-term high annoyance. Health Canada uses the change in %HA as the indicator of noise-included human health effects from exposure to project operational noise and to long-term construction noise exposure. To assess the impacts of noise from projects using this indicator, the project-related change in the sound environment and the related increase in %HA are evaluated using the dose-response relationship between noise levels and annoyance as per ISO 1996-1:2003 (ISO, 2003) [9]. Noise control measures should be considered when a change in the calculated %HA at any given receptor location exceeds 6.5%.

5.2.2 Established Criteria

Based on the discussions presented in Section 4.2.1, the criteria established for the Project in the context of a federal impact assessment in accordance with the Health Canada Noise Guideline are summarized in Table 4-2. The noise criteria have been established based on the various indicators presented in the Health Canada Noise Guideline relevant to an industrial operation in a remote location.

For noise-induced sleep disturbance, the nighttime $L_{Aeq\text{-}1hr}$ metric was used over the L_{dn} metric. This is based on the consideration that the L_{dn} criterion is defined as an annual average while the noise modeling presented in this report was conducted for the predictable worst-case hour scenario. The L_{dn} metric was considered in the assessment of %HA and long-term community annoyance.

Table 5-2: Noise Impact Criteria Based on Health Canada Noise Guideline

Noise Metric [1]	Noise Criteria	
	Limit	Consideration
Daytime $L_{Aeq-1hr}$	55 dBA	Interference with Speech Comprehension
Nighttime $L_{Aeq-1hr}$	45 dBA	Noise-Induced Sleep Disturbance
%HA [2]	6.5%	Long-Term Community Annoyance

Notes:

1. The noise metrics are defined for outdoors. An outdoor-to-indoor transmission loss of 15 dB is assumed in the Health Canada Noise Guideline for buildings with windows at least partially open, and it is considered that by meeting the outdoor noise criteria, the indoor noise limits will be respected.
2. The %HA to be assessed based on the outdoor day-night sound level (L_{dn}). The daytime and nighttime periods for calculation of L_{dn} as per the local guidelines are defined as: daytime period from 07:00 to 23:00 and nighttime period from 23:00 to 07:00. As per HC guidelines, the calculation of L_{dn} considers a +10dB penalty for both daytime and nighttime because this project PORs are in a quite rural area.

6.0 Noise Assessment

6.1 Methodology

The noise assessment for the Project was completed using a sound prediction software package, Cadna/A, published by Datakustik GmbH, which was configured to implement the ISO 9613-2 (ISO 1913-2) [10] environmental sound propagation algorithms. The Cadna/A noise modelling software is widely accepted by the environmental acoustics professional community and the MECP. All steady noise sources were assumed to operate simultaneously to model the predictable worst-case scenarios for the modelled periods of the Project: Construction (C; 3 years), Peak-Production (P-P; 8 years), Underground Production (U-P 18 years) and Active Closure (CL; 3 years) operations.

In order to provide an accurate prediction of the sound levels at the receptors due to noise emissions from a specific source(s), the modelling considers the following factors:

- Source sound power level and directivity of sources;
- Distance attenuation;
- Source-receptor geometry, including heights and elevations;
- Barrier (shielding) effects of the building and surrounding topography;
- Sound reflections off buildings, and storage tanks; and
- Ground and air (atmospheric) attenuation.

Topographical data for the site and surrounding area was provided and used to create a terrain model for the calculation of sound levels. Ground attenuation was assumed to be spectral for all sources, with the ground factor (G) assumed to be 0 for waterbodies, 0.5 for stockpiles/pads and 0.75 elsewhere. The attenuation effects of foliage (trees) were not considered to produce a conservative, predictable worst-case scenario during winter time (no-leaf period).

Stationary equipment operation was modelled using point sources in the noise model. Certain mobile equipment operation was modelled as area sources with acoustic energy from the equipment spread out over the work area at the Project site, e.g., dozer and loaders in stockpiles. Noise emission from haulage trucks was considered by modelling the haulage routes as line sources accounting for the number of passbys per hour, which was calculated based on capacity of the trucks and a prorated material movement per route based on a maximum material movement of 120,000 tpd during the construction and operational phases.

To ensure conservative predictions, most of the equipment throughout the Project site was modelled without any noise reduction measures. A few exceptions include the following equipment:

- All RARs ventilation fans,
- Discovery FAR,
- All exhausts for the diesel generators with a minimum capacity of 50 kW, and
- All 5 MW Natural Gas Generator casings and exhausts.

Further, the 1300 kW natural gas generators were modelled with high-performing acoustic enclosures and silenced exhaust as identified in the manufacturer manual. The nine 5 MW natural gas generators with reciprocating engines were modelled with mitigated casing and exhausts. The exhausts were modelled above the casing noise to reflect operational configuration of the engine casing radiating acoustic energy with the combustion exhaust discharging a few meters above the engine.

Noise breakout/leakage from the mine infrastructure buildings considered the transmission losses associated with sound travelling through the walls and the sound reflective properties of the interior surfaces. Façade and roof composition was provided by Great Bear Resources and then used to predict the transmission losses values with a

commercially available software package INSUL 10. The buildings' interior surfaces and machine surfaces were assumed to be acoustically hard (reflective).

Building facade and roof transmission loss values for the Process Plant and all heated buildings conformed to rating of Sound Transmission Class (STC) 40. Transmission loss values associated with non-heated buildings such as the Primary Crusher Building and the Transfer Tower housing the pebble crusher conformed to a STC rating of 32. The transmission loss values estimated from INSUL for the two types of buildings are summarized in Table 6-1. Note that these values consider limitations in the higher frequency contents due to flanking loss.

Sound transmission from the equipment located inside the buildings was calculated using the cumulative sum of the sound power levels of all equipment indoors and represented in the model as vertical area sources for the walls and area source for the roof. Building dimensions were extracted from the detailed drawings for the Process Plant, Primary Crusher Building and Pebble Crusher Transfer Tower. Information provided by Great Bear Resources contained information on the planned Paste Backfill Plant and Power Plant. The sound power levels of the vertical and area sources incorporated the radiating surface area of the buildings and the percentage of open building area to account for ventilation requirements, which was predicted using the building dimensions and typical Air Changes per Hour (ACH). The number of ACH was assumed based on the expected industrial processes within the building.

Table 6-1: Transmission Loss Values – Mine Infrastructure Buildings

1/1 Octave Band Centre Frequency (Hz)	31.5	63	125	250	500	1000	2000	4000	8000
Heated Buildings Transmission Loss (dB) STC 40	11	11	15	31	37	47	46	49	49
Non-Heated Buildings Transmission Loss (dB) STC 32	13	13	11	18	31	46	46	49	49

6.2 Modelling Results

The results presented in this report may change once the equipment manufacturers and buildings design have been selected by Great Bear Resources. Noise modelling was completed for four periods for the Project: Construction (C), Peak Production (P-P), Underground Production (U-P) and Closure (CL). The following modelling results in this section are presented for all PORs. The combined steady sound levels ($L_{Aeq-1hr}$, dBA) and (L_{dn}, dBA) for the predictable worst-case scenarios were calculated at all the identified PORs using the sound emissions from the significant sources for each phase. A summary of the results can be found in Appendix A, Tables A-1 through A-6d.

For a conservative assessment most of the equipment was modelled as standard equipment, and without additional noise control treatments and were also assumed to operate simultaneously. Appendix A provides a summary of the equipment including the sources noise levels with planned noise control measures. To ensure the predicted noise levels meet both the provincial and federal limits and guidelines, the equipment shall comply with the maximum allowable sound power levels listed in Appendix A.

The periods were assessed for both daytime and evening/nighttime as per provincial and federal guidelines. Given that the site and associated activities are planned to operate 24 hours per day, it is expected that the Project noise emissions will be similar during evening and nighttime. For the sake of conciseness, only the noise contours at 1.5m from the ground for the predictable worst-case hour ($L_{Aeq-1hr}$, dBA), as per the provincial guideline, are shown in Figure C-1 through Figure C-8 provided in Appendix C:

- Figure C-1 and Figure C-2 represent the noise contours for the Construction phase during daytime and evening/nighttime, respectively;
- Figure C-3 and Figure C-4 represent the noise contours for Peak Production period (early Operations phase) during daytime and evening/nighttime, respectively;

- Figure C-5 and Figure C-6 represent the noise contours for the Underground Production period (late Operations phase) during daytime and evening/nighttime, respectively; and
- Figure C-7 and Figure C-8 represent the noise contours for the Closure phase during daytime and evening/nighttime, respectively.

6.2.1 Provincial Assessment Framework

The modelled operational sound levels were assessed against the MECP NPC-300 guideline outlined in Section 5.1. Under the predictable worst-case operational scenario, the modelled sound pressure levels are not expected to be above the MECP NPC-300 guideline during any of the Project phases at any of the twenty-nine (29) PORs during daytime and evening/nighttime periods. A summary of the noise modeling results assessed against the provincial assessment framework (i.e., MECP NPC-300) is presented in Table 6-2.

Individual contributions for main sources at the nearest PORs for each modelled phase are identified in Table A-1a through A-4d. Results for all identified PORs is also provided in summary tables for each phase in Appendix A-6a through A-6d. Key parameters included in the model and sample calculations are provided in Appendix F.

6.2.2 Health Canada Assessment Framework

The modelled operational sounds levels were also assessed against Health Canada Noise Guideline established in Section 5.2.2. Under the predictable worst-case hour scenario ($L_{Aeq-1hr}$), the sound levels are not expected to be above the guideline at any of the twenty-nine (29) PORs, during daytime and evening/nighttime periods, for all modelled scenarios. A summary of the noise modeling results with respect to the $L_{Aeq-1hr}$ metric is presented in Table 6-3 for all PORs.

The modelled sound levels for each period were also assessed with respect to the L_{dn} metric and against the change in %HA criterion as identified in Table 5-2. This metric requires the usage of baseline sound levels summarized in Section 3.0. A summary of the noise modeling results with respect to the L_{dn} and %HA metrics is presented in Table 6-4. Details of the %HA calculation for all four modelled periods are provided in Table A-5. The change in %HA is expected to meet the HC guideline of 6.5%.

6.2.3 Predicted Impacts

Based on the results presented herewith, the noise prediction modelling indicates that predicted noise levels at all twenty-nine (29) PORs meet the provincial and federal guidelines for all periods assessed. These results are contingent on the equipment meeting the maximum allowable sound power levels listed in Appendix A.

Table 6-2: Noise Modelling Results ($L_{Aeq-1hr}$) – Provincial Assessment Framework

POR	Period	Predicted Sound Levels ($L_{Aeq-1hr}$)				NPC-300 Criteria	Compliant [Y/N]			
		C	P-P	U-P	CI		C	P-P	U-P	CI
POR1	Day	43	41	43	31	45 dBA	Y	Y	Y	Y
	Evening/Night	38	39	40	31	40 dBA	Y	Y	Y	Y
	Impulsive	21	-	-	-	45 dBAI	Y	-	-	-
	Testing	18	36	36	28	50 dBA	Y	Y	Y	Y
POR2	Day	33	31	32	17	45 dBA	Y	Y	Y	Y
	Evening/Night	30	31	30	17	40 dBA	Y	Y	Y	Y
	Impulsive	7	-	-	-	45 dBAI	Y	-	-	-
	Testing	0	17	17	10	50 dBA	Y	Y	Y	Y
POR3	Day	33	32	33	17	45 dBA	Y	Y	Y	Y
	Evening/Night	31	31	30	17	40 dBA	Y	Y	Y	Y
	Impulsive	7	-	-	-	45 dBAI	Y	-	-	-
	Testing	1	17	17	11	50 dBA	Y	Y	Y	Y
POR4	Day	43	42	44	25	45 dBA	Y	Y	Y	Y
	Evening/Night	33	36	36	25	40 dBA	Y	Y	Y	Y
	Impulsive	44	-	-	-	45 dBAI	Y	-	-	-
	Testing	9	24	24	17	50 dBA	Y	Y	Y	Y
POR5	Day	39	38	40	23	45 dBA	Y	Y	Y	Y
	Evening/Night	34	37	36	23	40 dBA	Y	Y	Y	Y
	Impulsive	24	-	-	-	45 dBAI	Y	-	-	-
	Testing	9	18	18	12	50 dBA	Y	Y	Y	Y
POR6	Day	34	32	33	18	45 dBA	Y	Y	Y	Y
	Evening/Night	31	31	31	18	40 dBA	Y	Y	Y	Y
	Impulsive	8	-	-	-	45 dBAI	Y	-	-	-
	Testing	1	18	18	11	50 dBA	Y	Y	Y	Y
POR7	Day	30	29	29	14	45 dBA	Y	Y	Y	Y
	Evening/Night	28	28	27	14	40 dBA	Y	Y	Y	Y
	Impulsive	0	-	-	-	45 dBAI	Y	-	-	-
	Testing	-3	11	11	6	50 dBA	Y	Y	Y	Y
POR8	Day	36	35	36	18	45 dBA	Y	Y	Y	Y
	Evening/Night	26	31	30	18	40 dBA	Y	Y	Y	Y
	Impulsive	29	-	-	-	45 dBAI	Y	-	-	-
	Testing	3	15	15	9	50 dBA	Y	Y	Y	Y

POR	Period	Predicted Sound Levels ($L_{Aeq-1hr}$)				NPC-300 Criteria	Compliant [Y/N]			
		C	P-P	U-P	CI		C	P-P	U-P	CI
POR9	Day	41	40	42	23	45 dBA	Y	Y	Y	Y
	Evening/Night	31	35	35	23	40 dBA	Y	Y	Y	Y
	Impulsive	41	-	-	-	45 dBAI	Y	-	-	-
	Testing	8	22	22	15	50 dBA	Y	Y	Y	Y
POR10	Day	40	39	41	24	45 dBA	Y	Y	Y	Y
	Evening/Night	32	35	34	24	40 dBA	Y	Y	Y	Y
	Impulsive	39	-	-	-	45 dBAI	Y	-	-	-
	Testing	8	23	23	17	50 dBA	Y	Y	Y	Y
POR11	Day	40	38	40	27	45 dBA	Y	Y	Y	Y
	Evening/Night	36	37	37	27	40 dBA	Y	Y	Y	Y
	Impulsive	25	-	-	-	45 dBAI	Y	-	-	-
	Testing	13	32	32	23	50 dBA	Y	Y	Y	Y
POR12	Day	34	34	35	19	45 dBA	Y	Y	Y	Y
	Evening/Night	27	31	30	19	40 dBA	Y	Y	Y	Y
	Impulsive	28	-	-	-	45 dBAI	Y	-	-	-
	Testing	2	18	18	11	50 dBA	Y	Y	Y	Y
POR13	Day	32	31	33	16	45 dBA	Y	Y	Y	Y
	Evening/Night	24	28	27	16	40 dBA	Y	Y	Y	Y
	Impulsive	24	-	-	-	45 dBAI	Y	-	-	-
	Testing	0	13	13	7	50 dBA	Y	Y	Y	Y
POR14	Day	31	30	31	15	45 dBA	Y	Y	Y	Y
	Evening/Night	23	28	27	15	40 dBA	Y	Y	Y	Y
	Impulsive	21	-	-	-	45 dBAI	Y	-	-	-
	Testing	-1	11	11	6	50 dBA	Y	Y	Y	Y
POR15	Day	30	30	31	14	45 dBA	Y	Y	Y	Y
	Evening/Night	23	27	26	14	40 dBA	Y	Y	Y	Y
	Impulsive	19	-	-	-	45 dBAI	Y	-	-	-
	Testing	-2	11	11	5	50 dBA	Y	Y	Y	Y
POR16	Day	28	27	29	13	45 dBA	Y	Y	Y	Y
	Evening/Night	21	25	24	13	40 dBA	Y	Y	Y	Y
	Impulsive	15	-	-	-	45 dBAI	Y	-	-	-
	Testing	-4	10	10	4	50 dBA	Y	Y	Y	Y
POR17	Day	26	26	27	11	45 dBA	Y	Y	Y	Y

POR	Period	Predicted Sound Levels ($L_{Aeq-1hr}$)				NPC-300 Criteria	Compliant [Y/N]			
		C	P-P	U-P	CI		C	P-P	U-P	CI
	Evening/Night	19	24	22	11	40 dBA	Y	Y	Y	Y
	Impulsive	11	-	-	-	45 dBAI	Y	-	-	-
	Testing	-5	7	7	2	50 dBA	Y	Y	Y	Y
POR18	Day	33	31	32	17	45 dBA	Y	Y	Y	Y
	Evening/Night	30	30	30	17	40 dBA	Y	Y	Y	Y
	Impulsive	7	-	-	-	45 dBAI	Y	-	-	-
	Testing	1	18	18	11	50 dBA	Y	Y	Y	Y
POR19	Day	31	30	31	15	45 dBA	Y	Y	Y	Y
	Evening/Night	23	28	26	15	40 dBA	Y	Y	Y	Y
	Impulsive	21	-	-	-	45 dBAI	Y	-	-	-
	Testing	-1	12	12	6	50 dBA	Y	Y	Y	Y
POR20	Day	32	31	32	16	45 dBA	Y	Y	Y	Y
	Evening/Night	24	28	27	16	40 dBA	Y	Y	Y	Y
	Impulsive	23	-	-	-	45 dBAI	Y	-	-	-
	Testing	-1	13	13	7	50 dBA	Y	Y	Y	Y
POR21	Day	38	37	38	20	45 dBA	Y	Y	Y	Y
	Evening/Night	28	33	32	20	40 dBA	Y	Y	Y	Y
	Impulsive	30	-	-	-	45 dBAI	Y	-	-	-
	Testing	4	16	16	10	50 dBA	Y	Y	Y	Y
POR22	Day	26	26	26	11	45 dBA	Y	Y	Y	Y
	Evening/Night	23	25	23	11	40 dBA	Y	Y	Y	Y
	Impulsive	-8	-	-	-	45 dBAI	Y	-	-	-
	Testing	-6	7	7	2	50 dBA	Y	Y	Y	Y
POR23	Day	25	25	24	9	45 dBA	Y	Y	Y	Y
	Evening/Night	21	24	22	9	40 dBA	Y	Y	Y	Y
	Impulsive	-14	-	-	-	45 dBAI	Y	-	-	-
	Testing	-9	3	3	-1	50 dBA	Y	Y	Y	Y
POR24	Day	26	24	25	10	45 dBA	Y	Y	Y	Y
	Evening/Night	23	24	22	10	40 dBA	Y	Y	Y	Y
	Impulsive	-8	-	-	-	45 dBAI	Y	-	-	-
	Testing	-7	7	7	2	50 dBA	Y	Y	Y	Y
POR25	Day	20	20	20	5	45 dBA	Y	Y	Y	Y
	Evening/Night	16	19	17	5	40 dBA	Y	Y	Y	Y

POR	Period	Predicted Sound Levels ($L_{Aeq-1hr}$)				NPC-300 Criteria	Compliant [Y/N]			
		C	P-P	U-P	CI		C	P-P	U-P	CI
	Impulsive	-23	-	-	-	45 dBAI	Y	-	-	-
	Testing	-12	-3	-3	-5	50 dBA	Y	Y	Y	Y
POR26	Day	30	28	29	14	45 dBA	Y	Y	Y	Y
	Evening/Night	27	28	26	14	40 dBA	Y	Y	Y	Y
	Impulsive	-1	-	-	-	45 dBAI	Y	-	-	-
	Testing	-3	12	12	6	50 dBA	Y	Y	Y	Y
POR27	Day	25	25	24	9	45 dBA	Y	Y	Y	Y
	Evening/Night	21	24	22	9	40 dBA	Y	Y	Y	Y
	Impulsive	-14	-	-	-	45 dBAI	Y	-	-	-
	Testing	-9	3	3	-1	50 dBA	Y	Y	Y	Y
POR28	Day	34	32	33	18	45 dBA	Y	Y	Y	Y
	Evening/Night	31	32	31	18	40 dBA	Y	Y	Y	Y
	Impulsive	7	-	-	-	45 dBAI	Y	-	-	-
	Testing	1	17	17	11	50 dBA	Y	Y	Y	Y
POR29	Day	30	30	31	14	45 dBA	Y	Y	Y	Y
	Evening/Night	23	27	26	14	40 dBA	Y	Y	Y	Y
	Impulsive	19	-	-	-	45 dBAI	Y	-	-	-
	Testing	-2	11	11	6	50 dBA	Y	Y	Y	Y

Table 6-3: Noise Modelling Results ($L_{Aeq-1hr}$) – Federal Assessment Framework

POR	Period	Predicted Sound Levels ($L_{Aeq-1hr}$)				HC Criteria	Compliant [Y/N]			
		C	P-P	U-P	CI		C	P-P	U-P	CI
POR1	Day	43	41	43	31	55 dBA	Y	Y	Y	Y
	Evening/Night	38	39	40	31	45 dBA	Y	Y	Y	Y
POR2	Day	33	31	32	17	55 dBA	Y	Y	Y	Y
	Evening/Night	30	31	30	17	45 dBA	Y	Y	Y	Y
POR3	Day	33	32	33	17	55 dBA	Y	Y	Y	Y
	Evening/Night	31	31	30	17	45 dBA	Y	Y	Y	Y
POR4	Day	43	42	44	25	55 dBA	Y	Y	Y	Y
	Evening/Night	33	36	36	25	45 dBA	Y	Y	Y	Y
POR5	Day	39	38	40	23	55 dBA	Y	Y	Y	Y
	Evening/Night	34	37	36	23	45 dBA	Y	Y	Y	Y
POR6	Day	34	32	33	18	55 dBA	Y	Y	Y	Y
	Evening/Night	31	31	31	18	45 dBA	Y	Y	Y	Y
POR7	Day	30	29	29	14	55 dBA	Y	Y	Y	Y
	Evening/Night	28	28	27	14	45 dBA	Y	Y	Y	Y
POR8	Day	36	35	36	18	55 dBA	Y	Y	Y	Y
	Evening/Night	26	31	30	18	45 dBA	Y	Y	Y	Y
POR9	Day	41	40	42	23	55 dBA	Y	Y	Y	Y
	Evening/Night	31	35	35	23	45 dBA	Y	Y	Y	Y
POR10	Day	40	39	41	24	55 dBA	Y	Y	Y	Y
	Evening/Night	32	35	34	24	45 dBA	Y	Y	Y	Y
POR11	Day	40	38	40	27	55 dBA	Y	Y	Y	Y
	Evening/Night	36	37	37	27	45 dBA	Y	Y	Y	Y
POR12	Day	34	34	35	19	55 dBA	Y	Y	Y	Y
	Evening/Night	27	31	30	19	45 dBA	Y	Y	Y	Y
POR13	Day	32	31	33	16	55 dBA	Y	Y	Y	Y
	Evening/Night	24	28	27	16	45 dBA	Y	Y	Y	Y
POR14	Day	31	30	31	15	55 dBA	Y	Y	Y	Y
	Evening/Night	23	28	27	15	45 dBA	Y	Y	Y	Y
POR15	Day	30	30	31	14	55 dBA	Y	Y	Y	Y
	Evening/Night	23	27	26	14	45 dBA	Y	Y	Y	Y

POR	Period	Predicted Sound Levels ($L_{Aeq-1hr}$)				HC Criteria	Compliant [Y/N]			
		C	P-P	U-P	CI		C	P-P	U-P	CI
POR16	Day	28	27	29	13	55 dBA	Y	Y	Y	Y
	Evening/Night	21	25	24	13	45 dBA	Y	Y	Y	Y
POR17	Day	26	26	27	11	55 dBA	Y	Y	Y	Y
	Evening/Night	19	24	22	11	45 dBA	Y	Y	Y	Y
POR18	Day	33	31	32	17	55 dBA	Y	Y	Y	Y
	Evening/Night	30	30	30	17	45 dBA	Y	Y	Y	Y
POR19	Day	31	30	31	15	55 dBA	Y	Y	Y	Y
	Evening/Night	23	28	26	15	45 dBA	Y	Y	Y	Y
POR20	Day	32	31	32	16	55 dBA	Y	Y	Y	Y
	Evening/Night	24	28	27	16	45 dBA	Y	Y	Y	Y
POR21	Day	38	37	38	20	55 dBA	Y	Y	Y	Y
	Evening/Night	28	33	32	20	45 dBA	Y	Y	Y	Y
POR22	Day	26	26	26	11	55 dBA	Y	Y	Y	Y
	Evening/Night	23	25	23	11	45 dBA	Y	Y	Y	Y
POR23	Day	25	25	24	9	55 dBA	Y	Y	Y	Y
	Evening/Night	21	24	22	9	45 dBA	Y	Y	Y	Y
POR24	Day	26	24	25	10	55 dBA	Y	Y	Y	Y
	Evening/Night	23	24	22	10	45 dBA	Y	Y	Y	Y
POR25	Day	20	20	20	5	55 dBA	Y	Y	Y	Y
	Evening/Night	16	19	17	5	45 dBA	Y	Y	Y	Y
POR26	Day	30	28	29	14	55 dBA	Y	Y	Y	Y
	Evening/Night	27	28	26	14	45 dBA	Y	Y	Y	Y
POR27	Day	25	25	24	9	55 dBA	Y	Y	Y	Y
	Evening/Night	21	24	22	9	45 dBA	Y	Y	Y	Y
POR28	Day	34	32	33	18	55 dBA	Y	Y	Y	Y
	Evening/Night	31	32	31	18	45 dBA	Y	Y	Y	Y
POR29	Day	30	30	31	14	55 dBA	Y	Y	Y	Y
	Evening/Night	23	27	26	14	45 dBA	Y	Y	Y	Y

Table 6-4: Noise Modelling Results (L_{dn} and Change in %HA) – Federal Assessment Framework

POR	Baseline Level (L_{dn})	Predicted Sound Levels (L_{dn})				Change in %HA				HC Criteria	Compliant [Y/N]			
		C	P-P	U-P	CI	C	P-P	U-P	CI		C	P-P	U-P	CI
POR1	40	45	46	46	37	2.0	1.8	2.3	0.4	6.5	Y	Y	Y	Y
POR2	40	37	37	36	23	0.4	0.4	0.4	0.0	6.5	Y	Y	Y	Y
POR3	40	37	37	37	23	0.5	0.4	0.4	0.0	6.5	Y	Y	Y	Y
POR4	39	42	43	44	31	1.9	1.7	2.1	0.1	6.5	Y	Y	Y	Y
POR5	37	41	43	43	29	1.2	1.2	1.5	0.1	6.5	Y	Y	Y	Y
POR6	39	37	37	37	24	0.5	0.4	0.4	0.0	6.5	Y	Y	Y	Y
POR7	39	34	34	33	20	0.3	0.2	0.2	0.0	6.5	Y	Y	Y	Y
POR8	39	35	37	37	24	0.6	0.6	0.7	0.0	6.5	Y	Y	Y	Y
POR9	39	41	42	43	29	1.5	1.4	1.7	0.1	6.5	Y	Y	Y	Y
POR10	40	40	42	42	30	1.2	1.1	1.4	0.1	6.5	Y	Y	Y	Y
POR11	40	43	43	44	33	1.3	1.2	1.5	0.2	6.5	Y	Y	Y	Y
POR12	39	35	37	37	25	0.5	0.5	0.6	0.0	6.5	Y	Y	Y	Y
POR13	39	33	35	34	22	0.3	0.3	0.4	0.0	6.5	Y	Y	Y	Y
POR14	39	31	34	34	21	0.3	0.3	0.3	0.0	6.5	Y	Y	Y	Y
POR15	39	31	33	33	20	0.2	0.2	0.3	0.0	6.5	Y	Y	Y	Y
POR16	39	29	31	31	19	0.2	0.2	0.2	0.0	6.5	Y	Y	Y	Y
POR17	39	27	30	29	17	0.1	0.1	0.1	0.0	6.5	Y	Y	Y	Y
POR18	39	37	36	36	23	0.4	0.4	0.4	0.0	6.5	Y	Y	Y	Y
POR19	38	31	34	33	21	0.2	0.2	0.3	0.0	6.5	Y	Y	Y	Y
POR20	39	32	35	34	22	0.3	0.3	0.3	0.0	6.5	Y	Y	Y	Y
POR21	39	37	39	39	26	0.8	0.8	0.9	0.1	6.5	Y	Y	Y	Y
POR22	40	30	32	30	17	0.1	0.1	0.1	0.0	6.5	Y	Y	Y	Y
POR23	37	28	30	28	15	0.1	0.1	0.1	0.0	6.5	Y	Y	Y	Y
POR24	39	29	30	29	16	0.1	0.1	0.1	0.0	6.5	Y	Y	Y	Y
POR25	37	23	25	24	11	0.0	0.0	0.0	0.0	6.5	Y	Y	Y	Y
POR26	39	34	34	33	20	0.3	0.2	0.2	0.0	6.5	Y	Y	Y	Y
POR27	37	28	30	29	15	0.1	0.1	0.1	0.0	6.5	Y	Y	Y	Y
POR28	39	38	38	37	24	0.5	0.5	0.5	0.0	6.5	Y	Y	Y	Y
POR29	39	31	34	33	20	0.2	0.2	0.3	0.0	6.5	Y	Y	Y	Y

7.0 Conclusions

This Noise Modelling Report was prepared to assess the potential effects of the construction, operations, and closure phases of the Great Bear Project. A total of 29 PORs were identified in the vicinity of the Project area.

The noise impacts associated with the activities of the Great Bear Project were evaluated through predictive acoustic modelling in accordance with the criteria established by the MECP and Health Canada. The sound levels estimated at the PORs represent the worst-case impact assuming all noise sources are operating simultaneously.

The Project is in compliance with applicable regulatory requirements, at all 29 identified PORs, when the proposed noise control measures are implemented.

8.0 Closing

This Noise Modelling Report was prepared for Great Bear Resources by Wood. The quality of information and conclusions contained herein is consistent with the level of effort involved in Wood's services and based on: i) information available at the time of preparation; ii) data supplied by outside sources; and iii) the assumptions, conditions and qualifications set forth in this report.

Yours truly,
Wood Group Asset Integrity Solutions, Inc.
Vibration, Dynamics and Noise (VDN)

Prepared by:

Original signed by:

Liam Jason, M.Sc.
Acoustics & Vibration Analyst

Original signed by:

Carlos Yoong, Ph.D., P.Eng.
Senior Acoustics & Vibration Engineer

Original signed by:

Anmol Bhardwaj, P.Eng.
Acoustics & Vibration Analyst

Reviewed by:

Original signed by:

Henrik Olsen, M.Sc., INCE Bd. Cert.
Principal – Acoustics & Vibration

9.0 References

[1] Health Canada, *Guidance for Evaluating Human Health Impacts in Environmental Assessment: NOISE,* 2017.

[2] Ontario Ministry of the Environment and Climate Change (MOECC), "Publication NPC-300, Noise Assessment Criteria for Stationary Sources and for Land Use Planning," August 2013.

[3] Wood VDN, "2022 Sound and Vibration Baseline Report (Leaves-Off Program)," June 2022.

[4] Wood VDN, "2022 Sound and Vibration Baseline Report (Leaves-On Program)," Dec 2022.

[5] Wood VDN, "2023 Sound and Vibration Baseline Report (Leaves-Off Program)," December 2023.

[6] Wood VDN, "2023 Sound and Vibration Baseline Report (Leaves-On Program)," October 2023.

[7] Federal Highway Administration, *Construction Noise Handbook,* Washington, DC: U.S. Department of Transportation, 2006.

[8] World Health Organization (WHO), "Guidelines for Community Noise," 1999.

[9] International Organization for Standardization, "ISO 1996-1:2003 Acoustics – Description, measurement and assessment of environmental noise – Part 1: Basic quantities and assessment measurement and assessment of environmental noise," 2003.

[10] "International Organization for Standardization, ISO-9613-2. Acoustics – Attenuation of Sound during propagation outdoors. Part 2 – General method of calculation," 1996.".

[11] Kinross Gold Corporation, *(2024.07.10) Production Plan_Material Movementv8_PFS_IS,* Toronto: Unpublished/Internal Document, 2024.

[12] Kinross Gold Corporation, *GBP Various Internal Documents and Communications,* 2024.

[13] Kinross Gold Corporation, *GBP_IS_Equipment Fleet Sitewide 2024-06-14,* Unpublished/Internal Document.

[14] Kinross Gold Corporation, *GBR_GHG Estimate_Feb7_2024_for IS_v2,* Unpublished/Internal Document, 2024.

[15] Kinross Gold Corporation, *GBR_MASTER_IS_RFI Tracker (28Jun2024),* Unpublished/Internal Document, 2024.

[16] Kinross Gold Corporation, *GBR_WSP_IS_RFI_Ventilation Details_2024-05-02_v2,* Unpublished/Internal Document, 2024.

[17] Kinross Gold Corporation, *Great Bear_Const_Ops Schedule for WSP_IS_2024-05-25,* Unpublished/Internal Document, 2024.

Appendix A

Noise Source Summary Tables

Table A-0: Points of Reception (PORs) Summary

Project: Great Bear Project
Location: Red Lake, ON

Point of Reception ID	Point of Reception Description	UTM Coordinates		Height Above Ground
		X	Y	(m)
POR1	Residence/Cabin/Lodge/Camp	456965	5639223	1.5
POR2	Residence/Cabin/Lodge/Camp	465624	5635180	1.5
POR3	Residence/Cabin/Lodge/Camp	465611	5635303	4.5
POR4	Residence/Cabin/Lodge/Camp	451915	5639044	1.5
POR5	Residence/Cabin/Lodge/Camp	451671	5630891	1.5
POR6	Residence/Cabin/Lodge/Camp	465139	5634939	1.5
POR7	Residence/Cabin/Lodge/Camp	467085	5631026	4.5
POR8	Residence/Cabin/Lodge/Camp	447866	5639124	4.5
POR9	Residence/Cabin/Lodge/Camp	451051	5639187	4.5
POR10	Residence/Cabin/Lodge/Camp	452237	5640215	4.5
POR11	Residence/Cabin/Lodge/Camp	458555	5640149	4.5
POR12	Residence/Cabin/Lodge/Camp	450762	5642634	4.5
POR13	Residence/Cabin/Lodge/Camp	447708	5641952	4.5
POR14	Residence/Cabin/Lodge/Camp	446385	5641886	4.5
POR15	Residence/Cabin/Lodge/Camp	446675	5642960	4.5
POR16	Residence/Cabin/Lodge/Camp	447897	5645762	4.5
POR17	Commercial	446102	5646375	4.5
POR18	Residence/Cabin/Lodge/Camp	465476	5635383	1.5
POR19	Empty Lot, Non-mining Land Area	446876	5642540	4.5
POR20	Residence/Cabin/Lodge/Camp	447444	5642109	4.5
POR21	Commercial	447961	5637216	4.5
POR22	Residence/Cabin/Lodge/Camp	469646	5628897	4.5
POR23	Residence/Cabin/Lodge/Camp	469091	5623932	4.5
POR24	Residence/Cabin/Lodge/Camp	470572	5630691	4.5
POR25	Residence/Cabin/Lodge/Camp	463047	5614594	4.5
POR26	Residence/Cabin/Lodge/Camp	467430	5631399	4.5
POR27	Residence/Cabin/Lodge/Camp	468788	5623627	4.5
POR28	Residence/Cabin/Lodge/Camp	465478	5635052	4.5
POR29	Residence/Cabin/Lodge/Camp	447525	5643902	4.5

Table A-1: Construction Phase - Noise Source Summary

Project: Great Bear Project
Location: Red Lake, ON

Source ID [1]	Source Description	Source Location NAD 83 / UTM zone 15N		Sound Power Level [3]	Sound Power Level Adjustment [3]	Source Location [4]	Sound Characteristics [5]	Noise Control Measures [6]
		Latitude [2]	Longitude [2]					
		(m)	(m)	(dBA)	(+dB)	(I or O)	(S,Q,I,B,T,C)	(S,A,B,L,E,O,U)
AirCompressor_S185Q_02_p	Air Compressor--Sullair 185Q	455026	5635088	101	0	O	S	U
AirCompressor_S185Q_01_p	Air Compressor--Sullair 185Q	454915	5635153	101	0	O	S	U
BackHow_CAT330_mi	Backhoe--330	457192	5637348	104	0	O	S	U
BackhoeLoader_CAT430_pr	Backhoe Loader--Cat 430	455005	5635104	101	0	O	S	U
BatchPlant_pr	Batch Plant -- Ref FHA -- Single 500 Hz band noise	454984	5635082	115	0	O	S	U
BatchPlant_crf	Batch Plant -- Ref FHA -- Single 500 Hz band noise	455800	5634485	115	0	O	S	U
BlastLoaderCAT262_01_pp	Blasting Loader--CAT 262	458701	5633363	101	0	O	S	U
BlastLoaderCAT262	Blasting Loader--CAT 262	451838	5635984	101	0	O	S	U
BlastLoadeCAT262_02_pp	Blasting Loader--CAT 262	457380	5633961	101	0	O	S	U
BoomTruck_25t_02_pr	Boom Truck 25t--Terex 5092, 2-Stage Jib	454964	5635147	117	0	O	S	U
BoomTruck_25t_01_pr	Boom Truck 25t--Terex 5092, 2-Stage Jib	454972	5635161	117	0	O	S	U
ScreeningPlant_bp	Borrow Source - Screening Plant--	452653	5637695	116	0	O	S	U
ScreeningPlant_bp	Borrow Source - Screening Plant--	451655	5636002	116	0	O	S	U
JumpinJackCompactor_02_p	Compactor-- Jumping Jack	454873	5635090	106	0	O	S	U
JumpinJackCompactor_01_p	Compactor-- Jumping Jack	454881	5635096	106	0	O	S	U
Compresor_S375H_tf	Compressor--Sullair 375H	453337	5635514	83	0	O	S	U
Compresor_S375H_13_pr	Compressor--Sullair 375H	457068	5636678	83	0	O	S	U
Compresor_S375H_12_pr	Compressor--Sullair 375H	457076	5636662	83	0	O	S	U
Compresor_S375H_11_pr	Compressor--Sullair 375H	457090	5636644	83	0	O	S	U
Compresor_S375H_10_pr	Compressor--Sullair 375H	457099	5636630	83	0	O	S	U
Compresor_S375H_09_pr	Compressor--Sullair 375H	457050	5636664	83	0	O	S	U
Compresor_S375H_08_pr	Compressor--Sullair 375H	457024	5636579	83	0	O	S	U
Compresor_S375H_07_pr	Compressor--Sullair 375H	455796	5634492	83	0	O	S	U
Compresor_S375H_06_pr	Compressor--Sullair 375H	454836	5634681	83	0	O	S	U
Compresor_S375H_06_mi	Compressor--Sullair 375H	457064	5636647	83	0	O	S	U
Compresor_S375H_05_pr	Compressor--Sullair 375H	454893	5634926	83	0	O	S	U
Compresor_S375H_05_mi	Compressor--Sullair 375H	457020	5636625	83	0	O	S	U
Compresor_S375H_04_pr	Compressor--Sullair 375H	455001	5635094	83	0	O	S	U
Compresor_S375H_04_mi	Compressor--Sullair 375H	455188	5635305	83	0	O	S	U
Compresor_S375H_03_pr	Compressor--Sullair 375H	455037	5635133	83	0	O	S	U
Compresor_S375H_03_mi	Compressor--Sullair 375H	455028	5635460	83	0	O	S	U
Compresor_S375H_02_pr	Compressor--Sullair 375H	455002	5635191	83	0	O	S	U
Compresor_S375H_02_mi	Compressor--Sullair 375H	455215	5635352	83	0	O	S	U
Compresor_S375H_01_pr	Compressor--Sullair 375H	454942	5635133	83	0	O	S	U
Compresor_S375H_01_mi	Compressor--Sullair 375H	455266	5635344	83	0	O	S	U
ConcreteInternalVibrator_04	Concrete Internal Vibrator--	454994	5635197	76	0	O	S	U
ConcreteInternalVibrator_03	Concrete Internal Vibrator--	455053	5635090	76	0	O	S	U
ConcreteInternalVibrator_02	Concrete Internal Vibrator--	454922	5635074	76	0	O	S	U
ConcreteInternalVibrator_01	Concrete Internal Vibrator--	454922	5634906	76	0	O	S	U
ConcreteMixer_pr	Concrete mixer-- 250 L	454938	5635067	105	0	O	S	U
ConcreteTrowelPower_02_p	Concrete Trowel Power--	454873	5634917	110	0	O	S	U
ConcreteTrowelPower_01_p	Concrete Trowel Power--	454967	5635046	110	0	O	S	U
ConcreteVibratoryPowerScr	Concrete Vibratory Power Screeds--	455024	5635173	108	0	O	S	U
ConcreteVibratoryPowerScr	Concrete Vibratory Power Screeds--	454949	5635111	108	0	O	S	U

Table A-1: Construction Phase - Noise Source Summary

Project: Great Bear Project
Location: Red Lake, ON

Source ID [1]	Source Description	Source Location NAD 83 / UTM zone 15N		Sound Power Level [3]	Sound Power Level Adjustment [3]	Source Location [4]	Sound Characteristics [5]	Noise Control Measures [6]
		Latitude [2]	Longitude [2]					
		(m)	(m)	(dBA)	(+dB)	(I or O)	(S,Q,I,B,T,C)	(S,A,B,L,E,O,U)
Crane_80t_02_pr	Crane--80t	454995	5635122	105	0	O	S	U
Crane_80t_01_pr	Crane--80t	454742	5634584	105	0	O	S	U
CraneCrawler_50t_03_mi	Crane Crawler--50t	455083	5635404	98	0	O	S	U
CraneCrawler_50t_02_mi	Crane Crawler--50t	455065	5635336	98	0	O	S	U
CraneCrawler_50t_01_mi	Crane Crawler--50t	455009	5635375	98	0	O	S	U
CraneHydraulic_31t_mi	Crane Hydraulic--31t	455013	5635512	108	0	O	S	U
Crane_150t_pr	Crawler Conventional Crane 150T (used)--	455049	5635136	108	0	O	S	U
ProductionCrush_QJ341	Crusher--Sandvik QJ341	454792	5634626	122	0	O	S	U
CraneDEMAG_300t_pr	300T Crane - DEMAG-- DEMAG	455032	5635146	117	0	O	S	U
DewateringPump_10_tf	Dewatering Pump--DeWPump	452768	5637456	104	0	O	S	U
DewateringPump_10_pp	Dewatering Pump--DeWPump	458856	5633472	104	0	O	S	U
DewateringPump_10_mi	Dewatering Pump--DeWPump	455771	5634463	104	0	O	S	U
DewateringPump_09_tf	Dewatering Pump--DeWPump	453106	5635358	104	0	O	S	U
DewateringPump_09_pp	Dewatering Pump--DeWPump	458120	5633398	104	0	O	S	U
DewateringPump_09_mi	Dewatering Pump--DeWPump	455229	5635204	104	0	O	S	U
DewateringPump_08_tf	Dewatering Pump--DeWPump	454546	5635029	104	0	O	S	U
DewateringPump_08_pp	Dewatering Pump--DeWPump	457073	5634548	104	0	O	S	U
DewateringPump_08_mi	Dewatering Pump--DeWPump	457018	5636601	104	0	O	S	U
DewateringPump_07_tf	Dewatering Pump--DeWPump	452457	5637257	104	0	O	S	U
DewateringPump_07_pp	Dewatering Pump--DeWPump	457122	5633847	104	0	O	S	U
DewateringPump_07_mi	Dewatering Pump--DeWPump	457072	5637107	104	0	O	S	U
DewateringPump_06_tf	Dewatering Pump--DeWPump	452050	5637001	104	0	O	S	U
DewateringPump_06_pp	Dewatering Pump--DeWPump	458718	5633387	104	0	O	S	U
DewateringPump_06_mi	Dewatering Pump--DeWPump	457101	5637303	104	0	O	S	U
DewateringPump_05_tf	Dewatering Pump--DeWPump	452909	5635260	104	0	O	S	U
DewateringPump_05_pp	Dewatering Pump--DeWPump	457452	5633554	104	0	O	S	U
DewateringPump_05_mi	Dewatering Pump--DeWPump	455230	5635396	104	0	O	S	U
DewateringPump_04_tf	Dewatering Pump--DeWPump	456724	5634681	104	0	O	S	U
DewateringPump_04_pp	Dewatering Pump--DeWPump	458288	5634435	104	0	O	S	U
DewateringPump_04_mi	Dewatering Pump--DeWPump	454983	5635479	104	0	O	S	U
DewateringPump_03_tf	Dewatering Pump--DeWPump	453573	5635678	104	0	O	S	U
DewateringPump_03_pp	Dewatering Pump--DeWPump	456362	5634569	104	0	O	S	U
DewateringPump_03_mi	Dewatering Pump--DeWPump	454811	5634573	104	0	O	S	U
DewateringPump_02_tf	Dewatering Pump--DeWPump	453983	5635979	104	0	O	S	U
DewateringPump_02_q	Dewatering Pump--DeWPump	451714	5635848	104	0	O	S	U
DewateringPump_02_pp	Dewatering Pump--DeWPump	457531	5633531	104	0	O	S	U
DewateringPump_02_mi	Dewatering Pump--DeWPump	455141	5635242	104	0	O	S	U
DewateringPump_02_bp	Dewatering Pump--DeWPump	452237	5635504	104	0	O	S	U
DewateringPump_01_tf	Dewatering Pump--DeWPump	453824	5635199	104	0	O	S	U
DewateringPump_01_q	Dewatering Pump--DeWPump	451767	5636132	104	0	O	S	U
DewateringPump_01_pp	Dewatering Pump--DeWPump	456267	5634497	104	0	O	S	U
DewateringPump_01_mi	Dewatering Pump--DeWPump	454942	5635373	104	0	O	S	U
DewateringPump_01_bp	Dewatering Pump--DeWPump	452778	5637573	104	0	O	S	U
TMF_DamDieselGen_100kW	DieselGen_100kW_Case--Diesel GenSet Casing	453824	5635915	102	0	O	S	E

Table A-1: Construction Phase - Noise Source Summary

Project: Great Bear Project
Location: Red Lake, ON

Source ID [1]	Source Description	Source Location NAD 83 / UTM zone 15N		Sound Power Level [3]	Sound Power Level Adjustment [3]	Source Location [4]	Sound Characteristics [5]	Noise Control Measures [6]
		Latitude [2]	Longitude [2]					
		(m)	(m)	(dBA)	(+dB)	(I or O)	(S,Q,I,B,T,C)	(S,A,B,L,E,O,U)
SecurityShack_DieselGen_1	DieselGen_100kW_Case--Diesel GenSet Casing	457354	5638120	102	0	O	S	E
Mill_DieselPower_100kW_c	DieselGen_100kW_Case--Diesel GenSet Casing	455029	5635130	102	0	O	S	E
Mill_DieselPower_100kW_c	DieselGen_100kW_Case--Diesel GenSet Casing	455029	5635130	102	0	O	S	E
Mill_DieselPower_100kW_c	DieselGen_100kW_Case--Diesel GenSet Casing	455029	5635130	102	0	O	S	E
GenSet_DewateringPump_V	DieselGen_100kW_Case--Diesel GenSet Casing	458577	5634452	102	0	O	S	E
ExploStorage_DieselGen_10	DieselGen_100kW_Case--Diesel GenSet Casing	459209	5634334	102	0	O	S	E
ExploMagazine_DieselGen_	DieselGen_100kW_Case--Diesel GenSet Casing	458277	5634505	102	0	O	S	E
DixieWaterPumpDieselGen_	DieselGen_100kW_Case--Diesel GenSet Casing	455662	5633868	102	0	O	S	E
DieselGenSet_Construc_100	DieselGen_100kW_Case--Diesel GenSet Casing	457214	5637232	102	0	O	S	E
DieselGenSet_Construc_100	DieselGen_100kW_Case--Diesel GenSet Casing	457213	5637288	102	0	O	S	E
DieselGenSet_Construc_100	DieselGen_100kW_Case--Diesel GenSet Casing	457212	5637380	102	0	O	S	E
DeWaterinMiscDieselGen_1	DieselGen_100kW_Case--Diesel GenSet Casing	457452	5634413	102	0	O	S	E
Admin_misc_DieselGen_100	DieselGen_100kW_Case--Diesel GenSet Casing	455050	5635310	102	0	O	S	E
Admin_misc_DieselGen_100	DieselGen_100kW_Case--Diesel GenSet Casing	455085	5635290	102	0	O	S	E
Mill_DieselPower_100kW_c	DieselGen_100kW_Case--Diesel GenSet Casing	455029	5635130	102	0	O	S	E
Mill_DieselPower_100kW_c	DieselGen_100kW_Case--Diesel GenSet Casing	455029	5635130	102	0	O	S	E
Mill_misc_DieselGenSet_100	DieselGen_100kW_Ex--Diesel GenSet Exhaust	455029	5635130	94	0	O	S	S
ExploStorageDieselGenSet_	DieselGen_100kW_Ex--Diesel GenSet Exhaust	459212	5634334	94	0	O	S	S
ExploMagazineDieselGenSe	DieselGen_100kW_Ex--Diesel GenSet Exhaust	458276	5634502	94	0	O	S	S
DieselWaterPump_Dixie_10	DieselGen_100kW_Ex--Diesel GenSet Exhaust	455666	5633868	94	0	O	S	S
DieselGenSet100kW_exhau	DieselGen_100kW_Ex--Diesel GenSet Exhaust	455051	5635311	94	0	O	S	S
DieselGenSet100kW_exhau	DieselGen_100kW_Ex--Diesel GenSet Exhaust	455086	5635291	94	0	O	S	S
Mill_misc_DieselGenSet_100	DieselGen_100kW_Ex--Diesel GenSet Exhaust	455029	5635130	94	0	O	S	S
Mill_misc_DieselGenSet_100	DieselGen_100kW_Ex--Diesel GenSet Exhaust	455029	5635129	94	0	O	S	S
DieselGenSet_DewateringP	DieselGen_100kW_Ex--Diesel GenSet Exhaust	458575	5634450	94	0	O	S	S
DieselGenset_100 kW_exha	DieselGen_100kW_Ex--Diesel GenSet Exhaust	453822	5635913	94	0	O	S	S
DieselGenset 100 kW exhau	DieselGen_100kW_Ex--Diesel GenSet Exhaust	457218	5637379	94	0	O	S	S
DieselGenset 100 kW exhau	DieselGen_100kW_Ex--Diesel GenSet Exhaust	457216	5637288	94	0	O	S	S
DieselGenset 100 kW exhau	DieselGen_100kW_Ex--Diesel GenSet Exhaust	457217	5637232	94	0	O	S	S
DieselGenset 100 kW exhau	DieselGen_100kW_Ex--Diesel GenSet Exhaust	457354	5638119	94	0	O	S	S
DieselDewatering_misc_100	DieselGen_100kW_Ex--Diesel GenSet Exhaust	457453	5634413	94	0	O	S	S
Mill_misc_DieselGenSet_100	DieselGen_100kW_Ex--Diesel GenSet Exhaust	455028	5635129	94	0	O	S	S
Mill_misc_DieselGenSet_100	DieselGen_100kW_Ex--Diesel GenSet Exhaust	455028	5635129	94	0	O	S	S
DieselGenSet_200 kW casin	DieselGen_200kW_Case--Diesel GenSet Casing	464942	5633802	100	0	O	S	E
DieselGenSet_200 kW exha	DieselGen_200kW_Ex--Diesel GenSet Exhaust	464929	5633802	94	0	O	S	S
QuarryDieselGenSet_500kW	DieselGen_500kW_Case--	452142	5636658	97	0	O	S	E
DieselGenSet_500kW_case	DieselGen_500kW_Case--	455165	5634667	97	0	O	S	E
DieselGenSet_500kW_case	DieselGen_500kW_Case--	455161	5634661	97	0	O	S	E
DieselGenSet_500kW_case	DieselGen_500kW_Case--	455155	5634654	97	0	O	S	E
DieselGenSet_500kW_case	DieselGen_500kW_Case--	455151	5634647	97	0	O	S	E
DieselGenSet_500kW_case	DieselGen_500kW_Case--	455310	5634680	97	0	O	S	E
DieselGenSet_500kW_exhau	DieselGen_500kW_Ex--	455160	5634660	97	0	O	S	S
DieselGenSet_500kW_exhau	DieselGen_500kW_Ex--	455155	5634653	97	0	O	S	S
DieselGenSet_500kW_exhau	DieselGen_500kW_Ex--	455151	5634647	97	0	O	S	S

Table A-1: Construction Phase - Noise Source Summary

Project: Great Bear Project
Location: Red Lake, ON

Source ID [1]	Source Description	Source Location NAD 83 / UTM zone 15N		Sound Power Level [3]	Sound Power Level Adjustment [3]	Source Location [4]	Sound Characteristics [5]	Noise Control Measures [6]
		Latitude [2]	Longitude [2]					
		(m)	(m)	(dBA)	(+dB)	(I or O)	(S,Q,I,B,T,C)	(S,A,B,L,E,O,U)
DieselGenSet_500kW_exhau	DieselGen_500kW_Ex--	455165	5634666	97	0	O	S	S
DieselGenSet_500kW_ex	DieselGen_500kW_Ex--	455309	5634677	97	0	O	S	S
DieselGenset 500 kW exhau	DieselGen_500kW_Ex--	452142	5636655	97	0	O	S	S
DieselGenSet_50 kW casing	DieselGen_50kW_Case--Diesel GenSet Casing	463813	5633822	100	0	O	S	E
DieselGenSet_50kW exhaus	DieselGen_50kW_Ex--Diesel GenSet Exhaust	463804	5633822	91	0	O	S	S
DieselPump_05_pp	Diesel Pump--HL250M	458701	5633348	87	0	O	S	U
DieselPump_04_pp	Diesel Pump--HL250M	457737	5633805	87	0	O	S	U
DieselPump_03_pp	Diesel Pump--HL250M	458798	5633424	87	0	O	S	U
DieselPump_02_pp	Diesel Pump--HL250M	456884	5633926	87	0	O	S	U
DieselPump_01_pp	Diesel Pump--HL250M	457342	5633952	87	0	O	S	U
ManDruRol	Manual Drum Roller	455015	5635047	107	0	O	S	U
Exca_120t_02_pr	Excavator--120t	454971	5635129	99	0	O	S	U
Exca_120t_01_pr	Excavator--120t	454760	5634546	99	0	O	S	U
Exca_35t_02_pr	Excavator--35t	455001	5635159	105	0	O	S	U
Exca_35t_01_pr	Excavator--35t	454748	5634604	105	0	O	S	U
Exca_CAT336_06_tf	Excavator--CAT 336	452305	5637165	105	0	O	S	U
Exca_CAT336_05_tf	Excavator--CAT 336	452723	5637385	105	0	O	S	U
Exca_CAT336_04_tf	Excavator--CAT 336	453223	5635436	105	0	O	S	U
Exca_CAT336_03_tf	Excavator--CAT 336	456664	5634868	105	0	O	S	U
Exca_CAT336_02_tf	Excavator--CAT 336	453718	5635781	105	0	O	S	U
Exca_CAT336_01_tf	Excavator--CAT 336	454039	5636024	105	0	O	S	U
Excavator_CAT374_03_pp	Excavator--CAT 374	458756	5633360	107	0	O	S	U
Excavator_CAT374_02_pp	Excavator--CAT 374	457511	5633583	107	0	O	S	U
Excavator_CAT374_01_pp	Excavator--CAT 374	456762	5634590	107	0	O	S	U
FlatBedTruck_10t_mi	Truck Flatbed--10t	457158	5637285	104	0	O	S	U
Fork_CATDP4055_03_pp	Forklift--Cat DP40-55(C)N3, 5.5t	455010	5635192	99	0	O	S	U
Fork_CATDP4055_02_pp	Forklift--Cat DP40-55(C)N3, 5.5t	455065	5635441	99	0	O	S	U
Fork_CATDP4055_01_pp	Forklift--Cat DP40-55(C)N3, 5.5t	455143	5635305	99	0	O	S	U
FrontLoaderSmallerCAT966	Front End Loader (smaller)--CAT 966	458687	5633386	109	0	O	S	U
FrontLoaderSmallerCAT966	Front End Loader (smaller)--CAT 966	458749	5633380	109	0	O	S	U
FrontLoaderSmallerCAT966	Front End Loader (smaller)--CAT 966	457325	5633756	109	0	O	S	U
FrontLoaderSmallerCAT966	Front End Loader (smaller)--CAT 966	457046	5633949	109	0	O	S	U
FrontLoaderCAT993_02_pp	Front End Loader--CAT993	457460	5634082	116	0	O	S	U
FrontLoaderCAT993_01_pp	Front End Loader--CAT993	458752	5633339	116	0	O	S	U
FusionMachine_04_pr	Fusion Machine--Ritmo Delta 250	454904	5635148	105	0	O	S	U
FusionMachine_03_pr	Fusion Machine--Ritmo Delta 250	454898	5635135	105	0	O	S	U
FusionMachine_03_pp	Fusion Machine--Ritmo Delta 250	455085	5635371	105	0	O	S	U
FusionMachine_03_mi	Fusion Machine--Ritmo Delta 250	457285	5637350	105	0	O	S	U
FusionMachine_02_pr	Fusion Machine--Ritmo Delta 250	454935	5634946	105	0	O	S	U
FusionMachine_02_pp	Fusion Machine--Ritmo Delta 250	455048	5635189	105	0	O	S	U
FusionMachine_02_mi	Fusion Machine--Ritmo Delta 250	455194	5635416	105	0	O	S	U
FusionMachine_01_pr	Fusion Machine--Ritmo Delta 250	455002	5635118	105	0	O	S	U
FusionMachine_01_pp	Fusion Machine--Ritmo Delta 250	455039	5635192	105	0	O	S	U
FusionMachine_01_mi	Fusion Machine--Ritmo Delta 250	455108	5635437	105	0	O	S	U

Table A-1: Construction Phase - Noise Source Summary

Project: Great Bear Project
Location: Red Lake, ON

Source ID [1]	Source Description	Source Location NAD 83 / UTM zone 15N		Sound Power Level [3]	Sound Power Level Adjustment [3]	Source Location [4]	Sound Characteristics [5]	Noise Control Measures [6]
		Latitude [2]	Longitude [2]					
		(m)	(m)	(dBA)	(+dB)	(I or O)	(S,Q,I,B,T,C)	(S,A,B,L,E,O,U)
ForkliftGenie_4t_06_pr	FORKLIFT--Genie 4 ton Ext boom	454897	5635084	103	0	O	S	U
ForkliftGenie_4t_05_pr	FORKLIFT--Genie 4 ton Ext boom	454999	5635055	103	0	O	S	U
ForkliftGenie_4t_04_pr	FORKLIFT--Genie 4 ton Ext boom	454925	5635170	103	0	O	S	U
ForkliftGenie_4t_03_pr	FORKLIFT--Genie 4 ton Ext boom	455069	5635134	103	0	O	S	U
ForkliftGenie_4t_02_pr	FORKLIFT--Genie 4 ton Ext boom	454926	5635110	103	0	O	S	U
ForkliftGenie_4t_01_pr	FORKLIFT--Genie 4 ton Ext boom	454968	5635215	103	0	O	S	U
BorrowForklift_4t_06_mi	FORKLIFT--Genie 4 ton Ext boom	455183	5635238	103	0	O	S	U
BorrowForklift_4t_05_mi	FORKLIFT--Genie 4 ton Ext boom	455017	5635417	103	0	O	S	U
BorrowForklift_4t_04_mi	FORKLIFT--Genie 4 ton Ext boom	455149	5635446	103	0	O	S	U
BorrowForklift_4t_03_mi	FORKLIFT--Genie 4 ton Ext boom	457178	5637240	103	0	O	S	U
BorrowForklift_4t_02_mi	FORKLIFT--Genie 4 ton Ext boom	457177	5637292	103	0	O	S	U
BorrowForklift_4t_01_mi	FORKLIFT--Genie 4 ton Ext boom	457214	5637350	103	0	O	S	U
GenSet_13kVA_06_pr	Genset-- 13kVA	454837	5634667	92	0	O	S	U
GenSet_13kVA_05_pr	Genset-- 13kVA	455787	5634478	92	0	O	S	U
GenSet_13kVA_04_pr	Genset-- 13kVA	455807	5634501	92	0	O	S	U
GenSet_13kVA_03_pr	Genset-- 13kVA	454871	5634896	92	0	O	S	U
GenSet_13kVA_02_pr	Genset-- 13kVA	454960	5635099	92	0	O	S	U
GenSet_13kVA_01_pr	Genset-- 13kVA	454761	5634660	92	0	O	S	U
Genset_75k_02_pr	Genset--75kVA	455035	5635169	99	0	O	S	U
Genset_75k_01_pr	Genset--75kVA	454978	5635097	99	0	O	S	U
GroutPlant_CG630_tf	Grout Plant--CG630E	453796	5635840	75	0	O	S	U
Heater_350kBTU_pr	Heater--Indirect Fire 350000 BTU	454898	5635123	102	0	O	S	U
HVAC_Truck_S_in	HVAC_inlet--	455264	5634595	94	0	O	S	U
HVAC_TreatPlant_in	HVAC_inlet--	455258	5634527	94	0	O	S	U
HVAC_Storage_in	HVAC_inlet--	455193	5634629	94	0	O	S	U
HVAC_Kitchen_in	HVAC_inlet--	455122	5634526	94	0	O	S	U
HVAC_CAMP_C_in	HVAC_inlet--	455093	5634514	94	0	O	S	U
HVAC_CAMP_B_in	HVAC_inlet--	455077	5634521	94	0	O	S	U
HVAC_CAMP_A_in	HVAC_inlet--	455060	5634530	94	0	O	S	U
HVAC_Admin_in	HVAC_inlet--	455116	5634568	94	0	O	S	U
HVAC_TREATPlant_out	HVAC_outlet--	455261	5634525	89	0	O	S	U
HVAC_Storage_out	HVAC_outlet--	455196	5634628	89	0	O	S	U
HVAC_Kitchen_out	HVAC_outlet--	455125	5634524	89	0	O	S	U
HVAC_CAMP_C_out	HVAC_outlet--	455092	5634512	89	0	O	S	U
HVAC_CAMP_B_out	HVAC_outlet--	455076	5634519	89	0	O	S	U
HVAC_CAMP_A_out	HVAC_outlet--	455059	5634527	89	0	O	S	U
HVAC_Admin_out	HVAC_outlet--	455119	5634566	89	0	O	S	U
JLG_125ft_02_mi	JLG--125feet	455245	5635310	109	0	O	S	U
JLG_125ft_01_mi	JLG--125feet	457159	5637224	109	0	O	S	U
LiftTruck_2t_pr	Lift Truck 2.5t--MH25-4, 4x4, 60HP	455059	5635115	104	0	O	S	U
LightingPlant_44	Light Tower Diesel	455011	5635026	93	0	O	S	U
LightingPlant_43	Light Tower Diesel	455082	5635157	93	0	O	S	U
LightingPlant_42	Light Tower Diesel	454948	5635215	93	0	O	S	U
LightingPlant_41	Light Tower Diesel	454902	5635109	93	0	O	S	U

Table A-1: Construction Phase - Noise Source Summary

Project: Great Bear Project
Location: Red Lake, ON

Source ID [1]	Source Description	Source Location NAD 83 / UTM zone 15N		Sound Power Level [3]	Sound Power Level Adjustment [3]	Source Location [4]	Sound Characteristics [5]	Noise Control Measures [6]
		Latitude [2]	Longitude [2]					
		(m)	(m)	(dBA)	(+dB)	(I or O)	(S,Q,I,B,T,C)	(S,A,B,L,E,O,U)
Light_tower_40	Light Tower Diesel	456240	5634264	93	0	O	S	U
Light_tower_39	Light Tower Diesel	456265	5633601	93	0	O	S	U
Light_tower_38	Light Tower Diesel	456232	5633619	93	0	O	S	U
Light_tower_37	Light Tower Diesel	458307	5633294	93	0	O	S	U
Light_tower_36	Light Tower Diesel	458282	5633328	93	0	O	S	U
Light_tower_35	Light Tower Diesel	458294	5633448	93	0	O	S	U
Light_tower_34	Light Tower Diesel	458269	5633469	93	0	O	S	U
Light_tower_33	Light Tower Diesel	457929	5633551	93	0	O	S	U
Light_tower_32	Light Tower Diesel	457897	5633551	93	0	O	S	U
Light_tower_31	Light Tower Diesel	457161	5637243	93	0	O	S	U
Light_tower_30	Light Tower Diesel	457162	5637336	93	0	O	S	U
Light_tower_29	Light Tower Diesel	457119	5637107	93	0	O	S	U
Light_tower_28	Light Tower Diesel	454928	5635087	93	0	O	S	U
Light_tower_27	Light Tower Diesel	457092	5636602	93	0	O	S	U
Light_tower_26	Light Tower Diesel	459979	5635703	93	0	O	S	U
Light_tower_25	Light Tower Diesel	458078	5635108	93	0	O	S	U
Light_tower_24	Light Tower Diesel	456474	5635401	93	0	O	S	U
Light_tower_23	Light Tower Diesel	456993	5635783	93	0	O	S	U
Light_tower_22	Light Tower Diesel	458276	5634421	93	0	O	S	U
Light_tower_21	Light Tower Diesel	458523	5634689	93	0	O	S	U
Light_tower_20	Light Tower Diesel	458193	5633835	93	0	O	S	U
Light_tower_19	Light Tower Diesel	456358	5634004	93	0	O	S	U
Light_tower_18	Light Tower Diesel	456720	5634625	93	0	O	S	U
Light_tower_17	Light Tower Diesel	456242	5634494	93	0	O	S	U
Light_tower_16	Light Tower Diesel	455808	5634491	93	0	O	S	U
Light_tower_15	Light Tower Diesel	458537	5634727	93	0	O	S	U
Light_tower_14	Light Tower Diesel	454864	5634589	93	0	O	S	U
Light_tower_13	Light Tower Diesel	455407	5634487	93	0	O	S	U
Light_tower_12	Light Tower Diesel	454392	5635621	93	0	O	S	U
Light_tower_11	Light Tower Diesel	454339	5635662	93	0	O	S	U
Light_tower_10	Light Tower Diesel	453351	5635075	93	0	O	S	U
Light_tower_09	Light Tower Diesel	453336	5635075	93	0	O	S	U
Light_tower_08	Light Tower Diesel	456654	5634684	93	0	O	S	U
Light_tower_07	Light Tower Diesel	456652	5634684	93	0	O	S	U
Light_tower_06	Light Tower Diesel	452785	5637476	93	0	O	S	U
Light_tower_05	Light Tower Diesel	452774	5637475	93	0	O	S	U
Light_tower_04	Light Tower Diesel	453769	5637392	93	0	O	S	U
Light_tower_03	Light Tower Diesel	454792	5634657	93	0	O	S	U
Light_tower_02	Light Tower Diesel	456207	5635992	93	0	O	S	U
Light_tower_01	Light Tower Diesel	455135	5635357	93	0	O	S	U
Loader_CAT950_tf	Loader--CAT950	453864	5635887	109	0	O	S	U
ManLiftArticulated_60ft_06	Manlift Articulating--60feet	455113	5635369	104	0	O	S	U
ManLiftArticulated_60ft_05	Manlift Articulating--60feet	454911	5635392	104	0	O	S	U
ManLiftArticulated_60ft_04	Manlift Articulating--60feet	455236	5635258	104	0	O	S	U

Table A-1: Construction Phase - Noise Source Summary

Project: Great Bear Project
Location: Red Lake, ON

Source ID [1]	Source Description	Source Location NAD 83 / UTM zone 15N		Sound Power Level [3]	Sound Power Level Adjustment [3]	Source Location [4]	Sound Characteristics [5]	Noise Control Measures [6]
		Latitude [2]	Longitude [2]					
		(m)	(m)	(dBA)	(+dB)	(I or O)	(S,Q,I,B,T,C)	(S,A,B,L,E,O,U)
ManLiftArticulated_60ft_03_	Manlift Articulating--60feet	457255	5637224	104	0	O	S	U
ManLiftArticulated_60ft_02_	Manlift Articulating--60feet	457253	5637278	104	0	O	S	U
ManLiftArticulated_60ft_01_	Manlift Articulating--60feet	457255	5637334	104	0	O	S	U
ServiceManLift_18m_03_pr	Manlift 18m-- 600 AJ JLG Diesel, RT	454918	5635168	104	0	O	S	U
ServiceManLift_18m_02_pr	Manlift 18m-- 600 AJ JLG Diesel, RT	455030	5635104	104	0	O	S	U
ServiceManLift_18m_01_pr	Manlift 18m-- 600 AJ JLG Diesel, RT	455021	5635133	104	0	O	S	U
MiniExcavator_CAT305_pr	Mini Excavator--Cat 305D CR	455007	5635086	99	0	O	S	U
MobileCrane150t_pp	150t Mobile Crane--MobCrane150t	455063	5635157	108	0	O	S	U
MobileCrane50t_02_pp	50t Mobile Crane--Tadano GR-500XL	455052	5635163	112	0	O	S	U
MobileCrane50t_01_pp	50t Mobile Crane--Tadano GR-500XL	454983	5635192	112	0	O	S	U
NaturalGasGen_1300kW	NG_1300kW_all--Natural Gas Generator; for both case and exhaust	455162	5634654	110	0	O	S	E, S
NaturalGasGen_1300kW	NG_1300kW_all--Natural Gas Generator; for both case and exhaust	455157	5634645	110	0	O	S	E, S
NaturalGasGen_1300kW	NG_1300kW_all--Natural Gas Generator; for both case and exhaust	455168	5634661	110	0	O	S	E, S
NaturalGasGen_1300kW	NG_1300kW_all--Natural Gas Generator; for both case and exhaust	455165	5634658	110	0	O	S	E, S
NaturalGasGen_1300kW	NG_1300kW_all--Natural Gas Generator; for both case and exhaust	455160	5634650	110	0	O	S	E, S
NaturalGasGen_1300kW	NG_1300kW_all--Natural Gas Generator; for both case and exhaust	455155	5634641	110	0	O	S	E, S
OreControlDrill_03_pp	Ore Control Drill--Explorac E100	457496	5633760	118	0	O	S	U
OreControlDrill_02_pp	Ore Control Drill--Explorac E100	458661	5633377	118	0	O	S	U
OreControlDrill_01_pp	Ore Control Drill--Explorac E100	457235	5634161	118	0	O	S	U
PortableGenset_04_pr	Portable Genset Diesel--3k	455056	5635144	95	0	O	S	U
PortableGenset_03_pr	Portable Genset Diesel--3k	454986	5635233	95	0	O	S	U
PortableGenset_02_pr	Portable Genset Diesel--3k	454929	5635143	95	0	O	S	U
PortableGenset_01_pr	Portable Genset Diesel--3k	454995	5635072	95	0	O	S	U
PrimaryDrill_D65_03_pp	Primary Drill--140mm SmartRoc D65	458641	5633360	125	0	O	S	U
PrimaryDrill_D65_02_q	Primary Drill--140mm SmartRoc D65	451725	5635925	125	0	O	S	U
PrimaryDrill_D65_02_pr	Primary Drill--140mm SmartRoc D65	455036	5635182	125	0	O	S	U
PrimaryDrill_D65_02_pp	Primary Drill--140mm SmartRoc D65	457488	5633877	125	0	O	S	U
PrimaryDrill_D65_01_q	Primary Drill--140mm SmartRoc D65	451837	5636060	125	0	O	S	U
PrimaryDrill_D65_01_pr	Primary Drill--140mm SmartRoc D65	454967	5635107	125	0	O	S	U
PrimaryDrill_D65_01_pp	Primary Drill--140mm SmartRoc D65	457200	5634068	125	0	O	S	U
ProductionDrill_PV235_03_p	Production Drill--Epiroc Pit Viper PV235	458632	5633398	118	0	O	S	U
ProductionDrill_PV235_02_p	Production Drill--Epiroc Pit Viper PV235	457405	5633908	118	0	O	S	U
ProductionDrill_PV235_01_p	Production Drill--Epiroc Pit Viper PV235	457105	5634108	118	0	O	S	U
CraneRemoteTerrain_80t_02	RT Crane 80T--	454797	5634673	105	0	O	S	U
CraneRemoteTerrain_80t_02	RT Crane 80T--	455308	5635288	105	0	O	S	U
CraneRemoteTerrain_80t_01	RT Crane 80T--	455817	5634501	105	0	O	S	U
CraneRemoteTerrain_80t_01	RT Crane 80T--	457058	5636623	105	0	O	S	U
RockCrusher_UD211_pr	Rock Crusher--Sandvik UD211	455261	5634760	121	0	O	S	U
RockCrusher_UD211_crf	Rock Crusher--Sandvik UD211	455793	5634475	121	0	O	S	U
RockCrusher_UD211_02_q	Rock Crusher--Sandvik UD211	452310	5636473	121	0	O	S	U
RockCrusher_UD211_01_q	Rock Crusher--Sandvik UD211	451654	5635987	121	0	O	S	U
ScissorLift_13m_02_pr	Scissor lift--13.1 m capacity, 4X4	455019	5635102	109	0	O	S	U
ScissorLift_13m_01_pr	Scissor lift--13.1 m capacity, 4X4	454951	5635153	109	0	O	S	U
ServicePlatformTruck_20ft_	20' Service Platform Truck--	455044	5635124	107	0	O	S	U

Table A-1: Construction Phase - Noise Source Summary

Project: Great Bear Project
Location: Red Lake, ON

Source ID [1]	Source Description	Source Location NAD 83 / UTM zone 15N		Sound Power Level [3]	Sound Power Level Adjustment [3]	Source Location [4]	Sound Characteristics [5]	Noise Control Measures [6]
		Latitude [2]	Longitude [2]					
		(m)	(m)	(dBA)	(+dB)	(I or O)	(S,Q,I,B,T,C)	(S,A,B,L,E,O,U)
Shovel_10m3_pp	Shovel 10.0 m3--CAT 6015	458633	5633380	114	0	O	S	U
Shovel_16m3_pp	Shovel 16.5 m3--CAT 6030	457031	5634167	117	0	O	S	U
Skidder_JD640_02_tf	Skidder--JD 640L	453930	5635932	114	0	O	S	U
Skidder_JD640_01_tf	Skidder--JD 640L	453453	5635592	114	0	O	S	U
SkidSteer_CAT650_02_pp	Skid Steer--Bobcat S650	455030	5635197	101	0	O	S	U
SkidSteer_CAT650_01_pp	Skid Steer--Bobcat S650	454959	5635414	101	0	O	S	U
SkidSteerProcessPlant_02_p	Skidsteer--	454982	5635174	104	0	O	S	U
SkidSteerProcessPlant_01_p	Skidsteer--	454937	5635099	104	0	O	S	U
SkidSteerLoader_CAT252_p	Skid Steer Loader--Cat 252B - Bucket & Fork	454991	5635114	105	0	O	S	U
Telehandler_CAT1055_mi	Telehandler--	455120	5635343	106	0	O	S	U
Telehandler_CAT1055_02_p	Telehandler--Cat TL1055	455053	5635074	106	0	O	S	U
Telehandler_CAT1055_01_p	Telehandler--Cat TL1055	455037	5635081	106	0	O	S	U
CraneTerex_RT670_02_pr	Crane 70t--Terex RT670	455014	5635159	105	0	O	S	U
CraneTerex_RT670_01_pr	Crane 70t--Terex RT670	454994	5635168	105	0	O	S	U
CraneTerex_RT555_pr	Crane 55t--Terex RT555, 2-Stage Jib	454972	5635178	108	0	O	S	U
TireManipulator_WA500_pp	Tire Manipulator--WA-500-7	455046	5635507	109	0	O	S	U
TLB_CAT422_02_pp	TLB--Cat 422F2	454918	5634890	99	0	O	S	U
TLB_CAT422_01_pp	TLB--Cat 422F2	454779	5634601	99	0	O	S	U
VentilationFan_AEX	VentFan_aex--UG AEX Portal Ventilation Fan	455504	5634507	129	0	O	S	U
VentilationFan_LP_HL_FAR1	VF_LP_HL_FAR1--LP Fresh Air Raise	456757	5633595	129	0	O	S	U
VentilationFan_LP_HL_FAR1	VF_LP_HL_FAR1--LP Fresh Air Raise	456757	5633595	129	0	O	S	U
VentilationFan_LP_RAR2	VF_LP_RAR2--LP Return Air Raise	457914	5633559	114	0	O	S	O
VentilationFan_LP_RAR2	VF_LP_RAR2--LP Return Air Raise	457914	5633559	114	0	O	S	O
VibratingPlateCompactor_0	Vibrating Plate Compactor--600mm x 600mm	455008	5635016	108	0	O	S	U
VibratingPlateCompactor_0	Vibrating Plate Compactor--600mm x 600mm	455043	5635093	108	0	O	S	U
VibratingPlateCompactor_0	Vibrating Plate Compactor--600mm x 600mm	454913	5635079	108	0	O	S	U
WeldMachine_Vantage400_	Welding Machine--Vantage 400	454808	5634692	99	0	O	S	U
WeldMachine_Vantage400_	Welding Machine--Vantage 400	454917	5635132	99	0	O	S	U
WeldMachine_Vantage400_	Welding Machine--Vantage 400	454934	5635117	99	0	O	S	U
WeldMachine_Vantage400_	Welding Machine--Vantage 400	455007	5635068	99	0	O	S	U
WeldMachine_Vantage400_	Welding Machine--Vantage 400	455057	5635175	99	0	O	S	U
WeldMachine_Vantage400_	Welding Machine--Vantage 400	457252	5637347	99	0	O	S	U
WeldMachine_Vantage400_	Welding Machine--Vantage 400	455005	5635183	99	0	O	S	U
WeldMachine_Vantage400_	Welding Machine--Vantage 400	455080	5635465	99	0	O	S	U
WeldMachine_Vantage400_	Welding Machine--Vantage 400	454930	5635125	99	0	O	S	U
WeldMachine_Vantage400_	Welding Machine--Vantage 400	455048	5635413	99	0	O	S	U
WheelLoader_CAT844_02_p	Wheel Loader--CAT 844 RTD	458732	5633347	109	0	O	S	U
WheelLoader_CAT844_01_p	Wheel Loader--CAT 844 RTD	457234	5634087	109	0	O	S	U
WheelLoader_CAT950_pr	Wheel Loader with Quick Coupler--Cat 950H	455053	5635143	109	0	O	S	U
WheelLoader_CAT950_02_r	Wheel Loader--	455035	5635347	109	0	O	S	U
WheelLoader_CAT950_01_r	Wheel Loader--	457132	5637298	109	0	O	S	U
ZoomBoomTruck_04_mi	Zoom Boom--	457154	5637366	106	0	O	S	U
ZoomBoomTruck_03_mi	Zoom Boom--	454896	5634878	106	0	O	S	U
ZoomBoomTruck_02_mi	Zoom Boom--	455139	5635395	106	0	O	S	U

Table A-1: Construction Phase - Noise Source Summary

Project: Great Bear Project
Location: Red Lake, ON

Source ID [1]	Source Description	Source Location NAD 83 / UTM zone 15N		Sound Power Level [3]	Sound Power Level Adjustment [3]	Source Location [4]	Sound Characteristics [5]	Noise Control Measures [6]
		Latitude [2]	Longitude [2]					
		(m)	(m)	(dBA)	(+dB)	(I or O)	(S,Q,I,B,T,C)	(S,A,B,L,E,O,U)
ZoomBoomTruck_01_mi	Zoom Boom--	455040	5635393	106	0	O	S	U
R9 SouthDam to Overburde	Articulating Truck--40t	454234	5636070	102	0	O	S	U
R8 AEXPortal to AEX -PAG	Articulating Truck--40t	456511	5634838	101	0	O	S	U
R7 AEXPortal to AEX-NPAG	Articulating Truck--40t	456605	5634981	95	0	O	S	U
R39 PAG Stockpile to Overb	Articulating Truck--40t	456771	5635384	101	0	O	S	U
R28 TailingPipeline to Over	Articulating Truck--40t	453813	5636963	101	0	O	S	U
R16 CWP#1 Dam to Overbu	Articulating Truck--40t	457620	5634839	92	0	O	S	U
R15 BorrowSource#3BS3B t	Articulating Truck--40t	453534	5637478	87	0	O	S	U
R14 BorrowSource#3 to Ov	Articulating Truck--40t	453012	5637752	89	0	O	S	U
R13 Quarry2 to Overburden	Articulating Truck--40t	453428	5635969	96	0	O	S	U
R12 Quarry1 to Overburden	Articulating Truck--40t	452108	5635673	87	0	O	S	U
R11 TMF PondDam to Over	Articulating Truck--40t	453700	5634967	98	0	O	S	U
BusPersonnel_02_pp	Blasters Truck--F350	457313	5634143	89	0	O	S	U
BlastTruck_F350_q	Blasters Truck--F350	453238	5635078	99	0	O	S	U
BlastTruck_F350_01_pp	Blasters Truck--F350	457746	5634135	90	0	O	S	U
BlasterTruck_02_pp	Blasters Truck--F350	436262	5673265	89	0	O	S	U
Loader_CAT966_bp	Borrow Source - Loader (FEL)--CAT 966	453394	5637492	96	0	O	S	U
PersonnelBus_01_pp	Bus (60 seats)--BusPersonnel	456950	5635564	98	0	O	S	U
BusPersonnel_Two_UG	Bus (60 seats)--BusPersonnel	455843	5635868	95	0	O	S	U
BusPersonnel_04_pp	Bus (60 seats)--BusPersonnel	457575	5634979	86	0	O	S	U
BusPersonnel_03_pp	Bus (60 seats)--BusPersonnel	457302	5635516	87	0	O	S	U
ConcretePumpTruck_pr	Concrete Pump Truck--	455139	5634709	105	0	O	S	U
ConcreteTruck_8m3_pr	Concrete Truck --8m3 capacity, 6x4, 310 HP	455861	5635000	106	0	O	S	U
ContainerTrailerTruck_pp	Container Trailer Truck--ContTT	455823	5636168	95	0	O	S	U
DumperTruck_02_pr	Dumper Truck	454560	5636139	98	0	O	S	U
DumperTruck_01_pr	Dumper Truck	454555	5636158	98	0	O	S	U
DumpTruck_CAT740B_04_n	Dump Truck 40T --CAT 740B	457831	5634607	111	0	O	S	U
DumpTruck_CAT740B_03_n	Dump Truck 40T --CAT 740B	457465	5634851	113	0	O	S	U
DumpTruck_CAT740B_02_n	Dump Truck 40T --CAT 740B	456847	5634603	114	0	O	S	U
DumpTruck_CAT735B_01_n	Dump Truck --CAT 735B	456753	5635788	114	0	O	S	U
DumpTruck_CAT735_03_tf	Dump Truck --CAT 735B	452917	5637355	109	0	O	S	U
DumpTruck_CAT735_02_tf	Dump Truck --CAT 735B	451864	5635901	103	0	O	S	U
DumperTruck_CAT735B_01	Dump Truck --CAT 735B	453149	5635199	110	0	O	S	U
ArticulatedTruckCAT740_02	EJ Articulated Trucks--CAT 740	454135	5636546	109	0	O	S	U
ArticulatedTruckCAT740_01	EJ Articulated Trucks--CAT 740	452917	5637352	110	0	O	S	U
ArticulatedTruck_CAT740_0	EJ Articulated Trucks--CAT 740	452579	5637092	108	0	O	S	U
FlatBedBoomTruck_tf	Flat Bed or Boom Truck --	454183	5635851	98	0	O	S	U
FlatBedBoomTruck_HX620_	Flat Bed or Boom Truck --	455888	5635003	105	0	O	S	U
FlatDeckTruck_pp	Flat Deck Truck--FlatDT	455817	5636154	103	0	O	S	U
FuelTruck_CAT740_02_pp	Fuel Tanker Truck (30,000 L)--CAT 740	457326	5634137	90	0	O	S	U
FuelTankerTruck_CAT740_0	Fuel Tanker Truck (30,000 L)--CAT 740	456935	5635552	96	0	O	S	U
R36 BorrowSource#1 to Ha	Haul Truck--CAT 777F	454618	5635193	112	0	O	S	U
R35 HaulRoads to Overburd	Haul Truck--CAT 777F	455821	5635696	116	0	O	S	U
R34 NPAG Stockpile to Hau	Haul Truck--CAT 777F	456441	5635538	127	0	O	S	U

Table A-1: Construction Phase - Noise Source Summary

Project: Great Bear Project
Location: Red Lake, ON

Source ID [1]	Source Description	Source Location NAD 83 / UTM zone 15N		Sound Power Level [3]	Sound Power Level Adjustment [3]	Source Location [4]	Sound Characteristics [5]	Noise Control Measures [6]
		Latitude [2]	Longitude [2]					
		(m)	(m)	(dBA)	(+dB)	(I or O)	(S,Q,I,B,T,C)	(S,A,B,L,E,O,U)
R33 Overburden#2 to Dixie	Haul Truck--CAT 777F	456595	5634293	112	0	O	S	U
R32 NPAG Stockpile to Prin	Haul Truck--CAT 777F	455896	5634661	113	0	O	S	U
R31 BorrowSource#1 to Pri	Haul Truck--CAT 777F	455109	5634510	113	0	O	S	U
R30 NPAG Stockpile to Tail	Haul Truck--CAT 777F	456377	5635289	111	0	O	S	U
R29 BorrowSource#1 to Tai	Haul Truck--CAT 777F	453985	5636429	114	0	O	S	U
R27 NPAG Stockpile to Dive	Haul Truck--CAT 777F	457690	5634841	113	0	O	S	U
R26 Overburden#1 to Diver	Haul Truck--CAT 777F	457793	5634590	109	0	O	S	U
R25 DiversionChan#2 to PA	Haul Truck--CAT 777F	457718	5634664	105	0	O	S	U
R24 NPAG to CWP#1 Dam	Haul Truck--CAT 777F	456944	5634937	113	0	O	S	U
R23 Overburden#1 to CWP	Haul Truck--CAT 777F	457780	5634851	106	0	O	S	U
R22 Quarry1 to TMF PondD	Haul Truck--CAT 777F	452729	5635340	119	0	O	S	U
R21 BorrowSource#3 to TM	Haul Truck--CAT 777F	453768	5635927	117	0	O	S	U
R20 Quarry1 to SouthDam	Haul Truck--CAT 777F	452878	5635396	124	0	O	S	U
R2 ViggoPit to NPAG Stock	Haul Truck--CAT 777F	457453	5635362	128	0	O	S	U
R19 BorrowSource#3 to So	Haul Truck--CAT 777F	453659	5636792	112	0	O	S	U
R18 Quarry2 - Q1 to North	Haul Truck--CAT 777F	452253	5636909	109	0	O	S	U
R17 BorrowSource#3 to No	Haul Truck--CAT 777F	452637	5637627	107	0	O	S	U
R1 ViggoPit to PAG Stockpi	Haul Truck--CAT 777F	457786	5634397	131	0	O	S	U
R6 AEXPortal to ROM Stock	Haul Truck--CAT 785	455311	5634411	108	0	O	S	U
R5 ViggoPit to ROM Stockp	Haul Truck--CAT 785	457985	5633978	112	0	O	S	U
R41 AEX_NPAG to NPAG	Haul Truck--CAT 785	456681	5635402	108	0	O	S	U
R40 AEX_PAG to PAG	Haul Truck--CAT 785	456881	5635478	115	0	O	S	U
R4 ViggoPit to LGO Stockpi	Haul Truck--CAT 785	457288	5634421	114	0	O	S	U
R38 BorrowSource#1 to Inf	Haul Truck--CAT 785	455077	5635093	102	0	O	S	U
R37 NPAG Stockpile to ROI	Haul Truck--CAT 785	456167	5634805	107	0	O	S	U
R3 ViggoPit to LGO Stockpi	Haul Truck--CAT 785	457475	5634410	115	0	O	S	U
R2B LP Central to Overburd	Haul Truck--CAT 785	457582	5634006	130	0	O	S	U
HighCubeTruck_pp	High Cube Truck--Ford F-650 SD DIESEL	455818	5636176	95	0	O	S	U
WheelLoader_CAT966_03_n	Loader (FEL)--CAT 966	457498	5635094	103	0	O	S	U
WheelLoader_CAT966_01_n	Loader (FEL)--CAT 966	456701	5635562	108	0	O	S	U
Loader_CAT966_02_mi	Loader (FEL)--CAT 966	452429	5636680	104	0	O	S	U
LowboyTracktor_75t_pp	Lowboy and Tractor--75ton - 100ton	455790	5636157	96	0	O	S	U
MechanicsTruck_q	Mechanics Truck--Mtruck	453188	5635161	93	0	O	S	U
MechanicsTruck_04_pp	Mechanics Truck--Mtruck	457572	5634979	87	0	O	S	U
MechanicsTruck_03_pp	Mechanics Truck--Mtruck	457308	5635515	88	0	O	S	U
MechanicsTruck_02_pp	Mechanics Truck--Mtruck	457323	5634139	89	0	O	S	U
MechanicsTruck_01_pp	Mechanics Truck--Mtruck	456885	5634639	97	0	O	S	U
PickUpTruck_F150_02_pr	Pick-up--F150	455185	5635182	97	0	O	S	U
PickUpTruck_F150_01_pr	Pick-up--F150	456105	5636525	103	0	O	S	U
PickUp_F150_tf	Pick-up--F150	454203	5636478	95	0	O	S	U
PickUp_F150_q	Pick-up--F150	454434	5634923	99	0	O	S	U
PickUp_F150_q	Pick-up--F150	454046	5635787	98	0	O	S	U
PickUp_F150_03_pp	Pick-up--F150	457323	5634139	99	0	O	S	U
PickUp_F150_02_pp	Pick-up--F150	458579	5634331	98	0	O	S	U

Table A-1: Construction Phase - Noise Source Summary

Project: Great Bear Project
Location: Red Lake, ON

Source ID [1]	Source Description	Source Location NAD 83 / UTM zone 15N		Sound Power Level [3]	Sound Power Level Adjustment [3]	Source Location [4]	Sound Characteristics [5]	Noise Control Measures [6]
		Latitude [2]	Longitude [2]					
		(m)	(m)	(dBA)	(+dB)	(I or O)	(S,Q,I,B,T,C)	(S,A,B,L,E,O,U)
PickUp_F150_01_pp	Pick-up--F150	456944	5635566	105	0	O	S	U
PortableWaterTruck_pp	Portable Water Truck--PoWT	455910	5635932	96	0	O	S	U
RigidTruck_150t_mi	Rigid Truck--150t	456795	5635302	125	0	O	S	U
RigidTruck_150t_mi	Rigid Truck--150t	453289	5636295	118	0	O	S	U
RoadGrader16blade_01_pp	Road Grader--CAT 16	452670	5636780	108	0	O	S	U
RoadGrader_CAT16_pr	Road Grader--CAT 16	454164	5636709	103	0	O	S	U
RoadGrader_CAT16_02_pr	Road Grader--CAT 16	453251	5635112	105	0	O	S	U
RoadGrader_CAT16_02_pp	Road Grader--CAT 16	458267	5635325	100	0	O	S	U
RoadGrader_CAT16_01_mi	Road Grader--CAT 16	456251	5635420	106	0	O	S	U
SewageCollectionTruck_pp	Sewage Collection Truck--SewColTruck	454943	5634883	94	0	O	S	U
SnowWaterTruck_02_pp	Snow Plow/Water Truck--T880	457154	5634513	100	0	O	S	U
SnowWaterTruck_01_pp	Snow Plow/Water Truck--T880	456686	5635108	103	0	O	S	U
TandemWaterTruck_2500_p	Tadem Water Trucks-- 2500 gls	454690	5635064	93	0	O	S	U
WaterTruck_CAT740_01_pp	Water Truck (30,000 L)--CAT 740	457397	5634129	94	0	O	S	U
WaterTruck_02_pp	Water Truck (30,000 L)--CAT 740	454895	5634900	92	0	O	S	U
WaterTruck_CAT745_mi	Truck (Water) --	455915	5635940	113	0	O	S	U
BackHoe_330_bp	Backhoe--330	452336	5638238	104	0	O	S	U
Compactor_CAT64B_01_tf	Compactor--CAT CS64B	452492	5637234	108	0	O	S	U
Compactor_CAT64B_02_tf	Compactor--CAT CS64B	456704	5634851	108	0	O	S	U
Compactor_CAT64B_03_tf	Compactor--CAT CS64B	454102	5635405	108	0	O	S	U
Compactor_CAT433_01_mi	Compactor Vib--CAT 433	457016	5636594	112	0	O	S	U
Compactor_CAT433_02_mi	Compactor Vib--CAT 433	455104	5635420	112	0	O	S	U
Compactor_CAT433_03_mi	Compactor Vib--CAT 433	455077	5635316	109	0	O	S	U
Compactor_CAT434_04_mi	Compactor Vib--CAT CB434	454933	5635407	105	0	O	S	U
DozerBladeWinch_01_mi	Dozer W/ Blade and Winch--	455264	5635287	117	0	O	S	U
DozerBladeWinch_02_mi	Dozer W/ Blade and Winch--	455185	5635241	117	0	O	S	U
DozerBladeWinch_03_mi	Dozer W/ Blade and Winch--	454988	5635495	117	0	O	S	U
DozerBladeWinch_04_mi	Dozer W/ Blade and Winch--	456071	5635902	117	0	O	S	U
DozerBladeWinch_05_mi	Dozer W/ Blade and Winch--	457016	5636595	117	0	O	S	U
Dozer_CAT_D10_02_pp	Dozer - D10--CAT D10	455693	5635086	116	0	O	S	U
Dozer_CAT_D10_pp	Dozer - D10--CAT D10	456166	5635148	116	0	O	S	U
Dozer_CAT_D10_pp	Dozer - D10--CAT D10	457052	5635731	116	0	O	S	U
Dozer_CAT_D6_01_pp	Dozer - D6--CAT D6	457895	5635060	116	0	O	S	U
Dozer_CAT_D6_bp	Dozer - D6--CAT D6	452794	5637619	113	0	O	S	U
Dozer_CAT_D8_01_pr	Dozer--CAT D8	454987	5635136	120	0	O	S	U
Dozer_CAT_D8_02_pr	Dozer--CAT D8	454782	5634596	117	0	O	S	U
Dozer_CAT_D8_q	Dozer--CAT D8	451781	5636006	117	0	O	S	U
Dozer_CAT_D8_tf	Dozer--CAT D8	453585	5635721	123	0	O	S	U
Dozer_LGP_D4_mi	Dozer LGP--D4	455171	5635020	109	0	O	S	U
DozerWinch_CATD8_mi	Dozer Winch --CAT D8	456560	5636218	120	0	O	S	U
DozerWinch_CATD8_mi	Dozer Winch --CAT D8	457277	5634060	120	0	O	S	U
DrumRoller_66in_pr	Drum Roller--66"	454987	5635136	112	0	O	S	U
DrumRoll_01_pr	Manual Drum Roller	454898	5634906	110	0	O	S	U
Excavator_CAT330_01_mi	Excavator Hydraulic--CAT330	458258	5634510	110	0	O	S	U

Table A-1: Construction Phase - Noise Source Summary

Project: Great Bear Project
Location: Red Lake, ON

Source ID [1]	Source Description	Source Location NAD 83 / UTM zone 15N		Sound Power Level [3]	Sound Power Level Adjustment [3]	Source Location [4]	Sound Characteristics [5]	Noise Control Measures [6]
		Latitude [2]	Longitude [2]					
		(m)	(m)	(dBA)	(+dB)	(I or O)	(S,Q,I,B,T,C)	(S,A,B,L,E,O,U)
Excavator_CAT330_02_mi	Excavator Hydraulic--CAT330	456348	5634540	108	0	O	S	U
Excavator_CAT330_03_mi	Excavator Hydraulic--CAT330	457470	5633575	108	0	O	S	U
Excavator_CAT_D6_01_tf	EX Dozer--CAT D6	454278	5637123	113	0	O	S	U
Excavator_CAT_D6_02_tf	EX Dozer--CAT D6	453714	5637521	113	0	O	S	U
Excavator_CAT_D6_03_tf	EX Dozer--CAT D6	452377	5635465	113	0	O	S	U
Excavator_CAT_D6_04_tf	EX Dozer--CAT D6	454881	5636339	113	0	O	S	U
IntregatedToolCarrier_pp	Integrated Tool Carrier--WA200-7	454919	5634983	104	0	O	S	U
Loader_L1350_q	Quarry Source - Production Loader--L-1350 (23m3)	452363	5636561	120	0	O	S	U
BackHoe_PC1250_q	Quarry Source - Production Backhoe--PC1250 (6.7m3)	452247	5636838	110	0	O	S	U
RoadGrader_CAT16_01_pr	Road Grader--CAT 16	454988	5635136	111	0	O	S	U
RoadGrader_CAT16_02_pr	Road Grader--CAT 16	454782	5634596	111	0	O	S	U
Shovel_12m3_pp	Shovel 12.0 m3--CAT 6020	457243	5634080	116	0	O	S	U

Notes on Table:

1. Wherever possible, the Source ID matches the identifiers used in the ESDM report.
2. Source centre of gravity coordinates used for Line and Area sources. Vertical area source coordinates not provided since corresponding area source coordinates are provided.
3. Sound Power Level of Source, in dBA, including sound characteristic adjustments per NPC-104.
4. Source Location: O = Outside of building, including the roof, I = Inside of building
5. Sound Characteristic, per NPC-104
   S = Steady
   I = Impulsive
   T = Tonal
   Q = Quasi-Steady Impulsive
   B = Buzzing
   C = Cyclic
6. Noise Control Measures Included
   S = Silencer/Muffler
   L = Lagging
   O = Other
   A = Acoustic lining, plenum
   E = acoustic enclosure
   U = uncontrolled
   B = Barrier

Table A-1a: Construction Phase - Noise Source Summary

Daytime - LAeq,1hr

Project: Great Bear Project
Location: Red Lake, ON

Source ID	Source Description	Residence/Cabin/Lodge/Camp POR1 PR1 PR1 Point of Reception ID: POR1			Residence/Cabin/Lodge/Camp POR4 PR4 PR4 Point of Reception ID: POR4			Residence/Cabin/Lodge/Camp POR5 PR5 PR5 Point of Reception ID: POR5			Residence/Cabin/Lodge/Camp POR6 PR6 PR6 Point of Reception ID: POR6		
		Point of Reception 1			Point of Reception 4			Point of Reception 5			Point of Reception 6		
		Distance [3] (m)	Sound Level at PoR	Units [1] (dBA)	Distance [3] (m)	Sound Level at PoR	Units [1] (dBA)	Distance [3] (m)	Sound Level at PoR	Units [1] (dBA)	Distance [3] (m)	Sound Level at PoR	Units [1] (dBA)
DieselGenSet100kW_exhaust_Service_Adminstration_Area	DieselGen_100kW_Ex--Diesel GenSet Exhaust	4355	-6	dBA	4875	-8	dBA	5565	-10	dBA	10095	-20	dBA
DieselGenSet100kW_exhaust_Service_Adminstration_Area	DieselGen_100kW_Ex--Diesel GenSet Exhaust	4358	-6	dBA	4914	-8	dBA	5570	-10	dBA	10059	-20	dBA
DieselGenset 100 kW exhaust - Permanent Camp Area	DieselGen_100kW_Ex--Diesel GenSet Exhaust	1862	7	dBA	5558	-10	dBA	8536	-17	dBA	8289	-17	dBA
DieselGenset 100 kW exhaust - Permanent Camp Area	DieselGen_100kW_Ex--Diesel GenSet Exhaust	1951	6	dBA	5584	-10	dBA	8466	-17	dBA	8264	-16	dBA
DieselGenset 100 kW exhaust - Permanent Camp Area	DieselGen_100kW_Ex--Diesel GenSet Exhaust	2007	6	dBA	5604	-10	dBA	8425	-17	dBA	8247	-16	dBA
Mill_misc_DieselGenSet_100kW_ex_2	DieselGen_100kW_Ex--Diesel GenSet Exhaust	4528	-8	dBA	5002	-9	dBA	5408	-9	dBA	10112	-20	dBA
Mill_misc_DieselGenSet_100kW_ex_3	DieselGen_100kW_Ex--Diesel GenSet Exhaust	4528	-8	dBA	5002	-9	dBA	5408	-9	dBA	10112	-20	dBA
Mill_misc_DieselGenSet_100kW_ex_4	DieselGen_100kW_Ex--Diesel GenSet Exhaust	4529	-8	dBA	5002	-9	dBA	5408	-9	dBA	10113	-20	dBA
Mill_misc_DieselGenSet_100kW_ex_5	DieselGen_100kW_Ex--Diesel GenSet Exhaust	4529	-8	dBA	5002	-9	dBA	5408	-9	dBA	10113	-20	dBA
DieselGenSet_500kW_exhaust - AEX Portal	DieselGen_500kW_Ex--	4907	-4	dBA	5454	-8	dBA	5137	-4	dBA	9983	-18	dBA
DieselGenSet_500kW_exhaust - AEX Portal	DieselGen_500kW_Ex--	4915	-4	dBA	5456	-7	dBA	5128	-4	dBA	9989	-18	dBA
DieselGenSet_500kW_exhaust - AEX Portal	DieselGen_500kW_Ex--	4922	-4	dBA	5459	-7	dBA	5122	-4	dBA	9992	-18	dBA
DieselGenSet_500kW_exhaust - AEX Portal	DieselGen_500kW_Ex--	4900	-4	dBA	5452	-8	dBA	5144	-4	dBA	9978	-18	dBA
DieselGenset 500 kW exhaust - Quarry Source	DieselGen_500kW_Ex--	5464	-5	dBA	2401	7	dBA	5783	-7	dBA	13110	-24	dBA
DieselGenset 100 kW exhaust - Hwy 105 and Main Access R	DieselGen_100kW_Ex--Diesel GenSet Exhaust	1170	13	dBA	5517	-10	dBA	9196	-19	dBA	8410	-17	dBA
DieselGenset_100 kW_exhaust - TMF Dam	DieselGen_100kW_Ex--Diesel GenSet Exhaust	4564	-7	dBA	3666	-3	dBA	5464	-10	dBA	11359	-21	dBA
DieselGenSet_50 kW casing - Chakuni River	DieselGen_50kW_Case--Diesel GenSet Casing	8721	-8	dBA	12993	-13	dBA	12491	-13	dBA	1734	13	dBA
DieselGenSet_50kW exhaust - Chakuni River	DieselGen_50kW_Ex--Diesel GenSet Exhaust	8714	-20	dBA	12985	-26	dBA	12483	-26	dBA	1740	5	dBA
DieselGenSet_200 kW casing - Chakuni River	DieselGen_200kW_Case--Diesel GenSet Casing	9644	-7	dBA	14042	-13	dBA	13587	-12	dBA	1154	19	dBA
DieselGenSet_200 kW exhaust - Chakuni River	DieselGen_200kW_Ex--Diesel GenSet Exhaust	9634	-17	dBA	14030	-23	dBA	13575	-22	dBA	1156	14	dBA
R1 ViggoPit to PAG Stockpile	Haul Truck--CAT 777F	MS	35	dBA	MS	29	dBA	MS	29	dBA	MS	28	dBA
R34 NPAG Stockpile to HaulRoads	Haul Truck--CAT 777F	MS	33	dBA	MS	28	dBA	MS	27	dBA	MS	22	dBA
R2B LP Central to Overburden#1	Haul Truck--CAT 785	MS	32	dBA	MS	26	dBA	MS	27	dBA	MS	25	dBA
BlastLoaderCAT262_01_pp	Blasting Loader--CAT 262	6112	-17	dBA	8850	-4	dBA	7453	-2	dBA	6629	-17	dBA
BlastLoadeCAT262_02_pp	Blasting Loader--CAT 262	5280	-17	dBA	7465	-15	dBA	6485	-19	dBA	7822	-21	dBA
BlastTruck_F350_01_pp	Blasters Truck--F350	MS	-19	dBA	MS	-26	dBA	MS	-25	dBA	MS	-26	dBA
BlasterTruck_02_pp	Blasters Truck--F350	MS	-24	dBA	MS	-29	dBA	MS	-27	dBA	MS	-27	dBA
PersonnelBus_01_pp	Bus (60 seats)--BusPersonnel	MS	-7	dBA	MS	-16	dBA	MS	-19	dBA	MS	-23	dBA
BusPersonnel_02_pp	Blasters Truck--F350	MS	-23	dBA	MS	-29	dBA	MS	-28	dBA	MS	-33	dBA
BusPersonnel_03_pp	Bus (60 seats)--BusPersonnel	MS	-20	dBA	MS	-28	dBA	MS	-29	dBA	MS	-32	dBA
BusPersonnel_04_pp	Bus (60 seats)--BusPersonnel	MS	-22	dBA	MS	-31	dBA	MS	-31	dBA	MS	-32	dBA
ContainerTrailerTruck_pp	Container Trailer Truck--ContTT	MS	-6	dBA	MS	-16	dBA	MS	-21	dBA	MS	-27	dBA
ProductionCrush_QJ341	Crusher--Sandvik QJ341	5085	24	dBA	5273	24	dBA	4868	25	dBA	10351	15	dBA
Dozer_CAT_D10_02_pp	Dozer - D10--CAT D10	4328	20	dBA	5472	17	dBA	5813	16	dBA	9448	10	dBA
Dozer_CAT_D10_pp	Dozer - D10--CAT D10	4152	21	dBA	5766	16	dBA	6192	16	dBA	8976	10	dBA
Dozer_CAT_D10_pp	Dozer - D10--CAT D10	3494	23	dBA	6113	16	dBA	7239	13	dBA	8126	12	dBA
Dozer_CAT_D6_01_pp	Dozer - D6--CAT D6	4265	20	dBA	7186	13	dBA	7492	13	dBA	7245	13	dBA
DewateringPump_01_pp	Dewatering Pump--DeWPump	4777	-1	dBA	6294	-6	dBA	5843	-5	dBA	8883	-14	dBA
DewateringPump_02_pp	Dewatering Pump--DeWPump	5720	-9	dBA	7869	-13	dBA	6427	-7	dBA	7738	-11	dBA
DewateringPump_03_pp	Dewatering Pump--DeWPump	4693	-1	dBA	6309	-6	dBA	5961	-5	dBA	8785	-14	dBA
DewateringPump_04_pp	Dewatering Pump--DeWPump	4967	-2	dBA	7865	-11	dBA	7507	-10	dBA	6869	-8	dBA
DewateringPump_05_pp	Dewatering Pump--DeWPump	5690	-11	dBA	7798	-14	dBA	6365	-6	dBA	7811	-11	dBA
DewateringPump_06_pp	Dewatering Pump--DeWPump	6094	-24	dBA	8848	-14	dBA	7477	-10	dBA	6607	-26	dBA
DewateringPump_07_pp	Dewatering Pump--DeWPump	5378	-3	dBA	7356	-10	dBA	6201	-6	dBA	8092	-19	dBA
DewateringPump_08_pp	Dewatering Pump--DeWPump	4676	-1	dBA	6843	-8	dBA	6524	-7	dBA	8075	-12	dBA
DewateringPump_09_pp	Dewatering Pump--DeWPump	5938	-9	dBA	8389	-12	dBA	6920	-8	dBA	7186	-9	dBA
DewateringPump_10_pp	Dewatering Pump--DeWPump	6054	-6	dBA	8901	-14	dBA	7635	-10	dBA	6452	-9	dBA
DieselPump_01_pp	Diesel Pump--HL250M	5287	-40	dBA	7443	-44	dBA	6446	-43	dBA	7861	-47	dBA
DieselPump_02_pp	Diesel Pump--HL250M	5297	-21	dBA	7133	-27	dBA	6033	-27	dBA	8317	-30	dBA
DieselPump_03_pp	Diesel Pump--HL250M	6082	-40	dBA	8886	-32	dBA	7565	-28	dBA	6519	-43	dBA
DieselPump_04_pp	Diesel Pump--HL250M	5472	-22	dBA	7832	-29	dBA	6730	-26	dBA	7489	-28	dBA
DieselPump_05_pp	Diesel Pump--HL250M	6127	-42	dBA	8860	-32	dBA	7448	-28	dBA	6633	-44	dBA
Excavator_CAT374_01_pp	Excavator--CAT 374	4637	5	dBA	6583	0	dBA	6294	1	dBA	8384	-3	dBA
Excavator_CAT374_02_pp	Excavator--CAT 374	5666	2	dBA	7819	-3	dBA	6431	1	dBA	7748	-2	dBA
Excavator_CAT374_03_pp	Excavator--CAT 374	6131	-16	dBA	8895	-4	dBA	7504	-1	dBA	6576	-15	dBA
FrontLoaderSmallerCAT966_01_pp	Front End Loader (smaller)--CAT 966	5275	12	dBA	7231	9	dBA	6185	3	dBA	8153	7	dBA
FrontLoaderSmallerCAT966_02_pp	Front End Loader (smaller)--CAT 966	5478	12	dBA	7565	8	dBA	6339	-3	dBA	7904	7	dBA

	Residence/Cabin/Lodge/Camp POR1 PR1 PR1	Residence/Cabin/Lodge/Camp POR4 PR4 PR4	Residence/Cabin/Lodge/Camp POR5 PR5 PR5	Residence/Cabin/Lodge/Camp POR6 PR6 PR6
Point of Reception ID	**POR1**	**POR4**	**POR5**	**POR6**
Point of Reception Description				
Residence/Cabin/Lodge/Camp				
Point of reception coordinates				
X	456965	451915	451671	465139
Y	5639223	5639044	5630891	5634939
Z [2]	372	357	354	350

Notes on Table:
1. dBA = 1-hour energy equivalent sound (Leq (1-hr))
2. Height above local grade 3. MS = Mobile Source

Table A-1a: Construction Phase - Noise Source Summary

Daytime - LAeq,1hr

Project: Great Bear Project
Location: Red Lake, ON

Source ID	Source Description	Residence/Cabin/Lodge/Camp POR1 POR1 POR1 Point of Reception ID: POR1			Residence/Cabin/Lodge/Camp POR4 POR4 POR4 Point of Reception ID: POR4			Residence/Cabin/Lodge/Camp POR5 POR5 POR5 Point of Reception ID: POR5			Residence/Cabin/Lodge/Camp POR6 POR6 POR6 Point of Reception ID: POR6		
		Point of Reception Description: Residence/Cabin/Lodge/Camp			Point of Reception Description: Residence/Cabin/Lodge/Camp			Point of Reception Description: Residence/Cabin/Lodge/Camp			Point of Reception Description: Residence/Cabin/Lodge/Camp		
		Point of reception coordinates			Point of reception coordinates			Point of reception coordinates			Point of reception coordinates		
		X	Y	Z [2]	X	Y	Z [2]	X	Y	Z [2]	X	Y	Z [2]
		456965	5639223	372	451915	5639044	357	451671	5630891	354	465139	5634939	350
		Point of Reception 1			Point of Reception 4			Point of Reception 5			Point of Reception 6		
		Distance [3] (m)	Sound Level at PoR	Units [1] (dBA)	Distance [3] (m)	Sound Level at PoR	Units [1] (dBA)	Distance [3] (m)	Sound Level at PoR	Units [1] (dBA)	Distance [3] (m)	Sound Level at PoR	Units [1] (dBA)
FrontLoaderSmallerCAT966_03_pp	Front End Loader (smaller)--CAT 966	6110	-9	dBA	8876	6	dBA	7504	8	dBA	6579	-9	dBA
FrontLoaderSmallerCAT966_04_pp	Front End Loader (smaller)--CAT 966	6087	-2	dBA	8825	6	dBA	7448	9	dBA	6637	-6	dBA
FlatDeckTruck_pp	Flat Deck Truck--FlatDT	MS	2	dBA	MS	-8	dBA	MS	-12	dBA	MS	-19	dBA
FrontLoaderCAT993_01_pp	Front End Loader--CAT993	6150	-3	dBA	8905	9	dBA	7494	11	dBA	6585	-5	dBA
FrontLoaderCAT993_02_pp	Front End Loader--CAT993	5165	11	dBA	7441	11	dBA	6610	13	dBA	7727	11	dBA
Fork_CATDP4055_01_pp	Forklift--Cat DP40-55(C)N3, 5.5t	4321	1	dBA	4939	-1	dBA	5617	-2	dBA	10003	-9	dBA
Fork_CATDP4055_02_pp	Forklift--Cat DP40-55(C)N3, 5.5t	4232	1	dBA	4786	-1	dBA	5677	-2	dBA	10087	-9	dBA
Fork_CATDP4055_03_pp	Forklift--Cat DP40-55(C)N3, 5.5t	4479	0	dBA	4941	-1	dBA	5446	-2	dBA	10132	-10	dBA
FuelTankerTruck_CAT740_01_pp	Fuel Tanker Truck (30,000 L)--CAT 740	MS	-5	dBA	MS	-13	dBA	MS	-15	dBA	MS	-18	dBA
FuelTruck_CAT740_02_pp	Fuel Tanker Truck (30,000 L)--CAT 740	MS	-17	dBA	MS	-22	dBA	MS	-21	dBA	MS	-25	dBA
FusionMachine_01_pp	Fusion Machine--Ritmo Delta 250	4468	-18	dBA	4960	-21	dBA	5463	-18	dBA	10104	-37	dBA
FusionMachine_02_pp	Fusion Machine--Ritmo Delta 250	4466	-20	dBA	4967	-18	dBA	5467	-16	dBA	10094	-39	dBA
FusionMachine_03_pp	Fusion Machine--Ritmo Delta 250	4286	-10	dBA	4852	-17	dBA	5633	-17	dBA	10063	-31	dBA
GenSet_DewateringPump_Viggo_100kW_case	DieselGen_100kW_Case--Diesel GenSet Casing	5036	1	dBA	8091	-5	dBA	7771	-5	dBA	6580	-3	dBA
DieselGenSet_DewateringPump_Viggo_100kW_ex	DieselGen_100kW_Ex--Diesel GenSet Exhaust	5036	-9	dBA	8090	-17	dBA	7768	-16	dBA	6582	-13	dBA
HighCubeTruck_pp	High Cube Truck--Ford F-650 SD DIESEL	MS	-6	dBA	MS	-16	dBA	MS	-20	dBA	MS	-27	dBA
IntregatedToolCarrier_pp	Integrated Tool Carrier--WA200-7	4708	5	dBA	5051	4	dBA	5225	4	dBA	10220	-5	dBA
LowboyTracktor_75t_pp	Lowboy and Tractor--75ton - 100ton	MS	-5	dBA	MS	-15	dBA	MS	-19	dBA	MS	-26	dBA
MechanicsTruck_01_pp	Mechanics Truck--Mtruck	MS	-11	dBA	MS	-16	dBA	MS	-17	dBA	MS	-21	dBA
MechanicsTruck_02_pp	Mechanics Truck--Mtruck	MS	-20	dBA	MS	-25	dBA	MS	-24	dBA	MS	-29	dBA
MechanicsTruck_03_pp	Mechanics Truck--Mtruck	MS	-17	dBA	MS	-25	dBA	MS	-26	dBA	MS	-29	dBA
MechanicsTruck_04_pp	Mechanics Truck--Mtruck	MS	-19	dBA	MS	-27	dBA	MS	-28	dBA	MS	-28	dBA
MobileCrane150t_pp	150t Mobile Crane--MobCrane150t	4489	2	dBA	5002	0	dBA	5451	0	dBA	10079	-15	dBA
MobileCrane50t_01_pp	50t Mobile Crane--Tadano GR-500XL	4492	10	dBA	4925	10	dBA	5429	8	dBA	10160	0	dBA
MobileCrane50t_02_pp	50t Mobile Crane--Tadano GR-500XL	4488	7	dBA	4990	7	dBA	5449	8	dBA	10090	-6	dBA
OreControlDrill_01_pp	Ore Control Drill--Explorac E100	5070	-3	dBA	7222	12	dBA	6455	12	dBA	7942	-8	dBA
OreControlDrill_02_pp	Ore Control Drill--Explorac E100	6088	-5	dBA	8811	9	dBA	7420	11	dBA	6664	-4	dBA
OreControlDrill_03_pp	Ore Control Drill--Explorac E100	5489	7	dBA	7686	11	dBA	6495	1	dBA	7734	-6	dBA
PrimaryDrill_D65_01_pp	Primary Drill--140mm SmartRoc D65	5162	6	dBA	7260	9	dBA	6378	7	dBA	7987	-3	dBA
PrimaryDrill_D65_02_pp	Primary Drill--140mm SmartRoc D65	5374	2	dBA	7601	14	dBA	6541	11	dBA	7725	-2	dBA
PrimaryDrill_D65_03_pp	Primary Drill--140mm SmartRoc D65	6099	7	dBA	8807	16	dBA	7396	18	dBA	6687	2	dBA
ProductionDrill_PV235_01_pp	Production Drill--Epiroc Pit Viper PV235	5119	-4	dBA	7164	-6	dBA	6317	-5	dBA	8078	-8	dBA
ProductionDrill_PV235_02_pp	Production Drill--Epiroc Pit Viper PV235	5335	-4	dBA	7519	0	dBA	6482	12	dBA	7804	-9	dBA
ProductionDrill_PV235_03_pp	Production Drill--Epiroc Pit Viper PV235	6059	-6	dBA	8775	8	dBA	7400	11	dBA	6688	-4	dBA
PortableWaterTruck_pp	Portable Water Truck--PoWT	MS	-3	dBA	MS	-11	dBA	MS	-14	dBA	MS	-21	dBA
PickUp_F150_01_pp	Pick-up--F150	MS	0	dBA	MS	-9	dBA	MS	-12	dBA	MS	-15	dBA
PickUp_F150_02_pp	Pick-up--F150	MS	-14	dBA	MS	-22	dBA	MS	-21	dBA	MS	-18	dBA
PickUp_F150_03_pp	Pick-up--F150	MS	-13	dBA	MS	-18	dBA	MS	-17	dBA	MS	-22	dBA
RoadGrader16blade_01_pp	Road Grader--CAT 16	MS	7	dBA	MS	2	dBA	MS	1	dBA	MS	-1	dBA
RoadGrader_CAT16_02_pp	Road Grader--CAT 16	MS	0	dBA	MS	-9	dBA	MS	-10	dBA	MS	-8	dBA
SewageCollectionTruck_pp	Sewage Collection Truck--SewColTruck	MS	-3	dBA	MS	-16	dBA	MS	-20	dBA	MS	-25	dBA
Shovel_12m3_pp	Shovel 12.0 m3--CAT 6020	5151	0	dBA	7282	8	dBA	6421	8	dBA	7943	-5	dBA
Shovel_10m3_pp	Shovel 10.0 m3--CAT 6015	6077	-6	dBA	8788	8	dBA	7395	10	dBA	6691	-5	dBA
Shovel_16m3_pp	Shovel 16.5 m3--CAT 6030	5058	-1	dBA	7069	-5	dBA	6283	16	dBA	8145	-1	dBA
SkidSteer_CAT650_01_pp	Skid Steer--Bobcat S650	4305	3	dBA	4737	2	dBA	5593	0	dBA	10191	-8	dBA
SkidSteer_CAT650_02_pp	Skid Steer--Bobcat S650	4467	1	dBA	4950	0	dBA	5462	0	dBA	10113	-8	dBA
SnowWaterTruck_01_pp	Snow Plow/Water Truck--T880	MS	-2	dBA	MS	-10	dBA	MS	-11	dBA	MS	-18	dBA
SnowWaterTruck_02_pp	Snow Plow/Water Truck--T880	MS	-10	dBA	MS	-15	dBA	MS	-15	dBA	MS	-19	dBA
TireManipulator_WA500_pp	Tire Manipulator--WA-500-7	4182	10	dBA	4724	10	dBA	5719	8	dBA	10109	0	dBA
TLB_CAT422_01_pp	TLB--Cat 422F2	5113	-1	dBA	5286	-1	dBA	4841	0	dBA	10365	-10	dBA
TLB_CAT422_02_pp	TLB--Cat 422F2	4792	0	dBA	5126	-1	dBA	5152	-1	dBA	10221	-10	dBA
WaterTruck_CAT740_01_pp	Water Truck (30,000 L)--CAT 740	MS	-13	dBA	MS	-17	dBA	MS	-15	dBA	MS	-20	dBA
WaterTruck_02_pp	Water Truck (30,000 L)--CAT 740	MS	-14	dBA	MS	-15	dBA	MS	-15	dBA	MS	-26	dBA
WheelLoader_CAT844_01_pp	Wheel Loader--CAT 844 RTD	5143	-3	dBA	7271	2	dBA	6417	3	dBA	7951	-12	dBA
WheelLoader_CAT844_02_pp	Wheel Loader--CAT 844 RTD	6137	-7	dBA	8884	6	dBA	7477	8	dBA	6603	-8	dBA
ArticulatedTruckCAT740_01_tf	EJ Articulated Trucks--CAT 740	MS	6	dBA	MS	19	dBA	MS	2	dBA	MS	-9	dBA
ArticulatedTruckCAT740_02_tf	EJ Articulated Trucks--CAT 740	MS	7	dBA	MS	13	dBA	MS	1	dBA	MS	-9	dBA
ArticulatedTruck_CAT740_03_tf	EJ Articulated Trucks--CAT 740	MS	3	dBA	MS	17	dBA	MS	1	dBA	MS	-11	dBA
Compactor_CAT64B_02_tf	Compactor--CAT CS64B	4380	11	dBA	6365	7	dBA	6405	7	dBA	8436	2	dBA

Notes on Table:
1. dBA = 1-hour energy equivalent sound (Leq (1-hr))
2. Height above local grade 3. MS = Mobile Source

Table A-1a: Construction Phase - Noise Source Summary

Daytime - LAeq,1hr

Project: Great Bear Project
Location: Red Lake, ON

Source ID	Source Description	Residence/Cabin/Lodge/Camp POR1 POR1 POR1 Point of Reception ID: POR1			Residence/Cabin/Lodge/Camp POR4 POR4 POR4 Point of Reception ID: POR4			Residence/Cabin/Lodge/Camp POR5 POR5 POR5 Point of Reception ID: POR5			Residence/Cabin/Lodge/Camp POR6 POR6 POR6 Point of Reception ID: POR6		
		Point of Reception 1			Point of Reception 4			Point of Reception 5			Point of Reception 6		
		Distance [3] (m)	Sound Level at PoR	Units [1] (dBA)	Distance [3] (m)	Sound Level at PoR	Units [1] (dBA)	Distance [3] (m)	Sound Level at PoR	Units [1] (dBA)	Distance [3] (m)	Sound Level at PoR	Units [1] (dBA)
Compactor_CAT64B_03_tf	Compactor--CAT CS64B	4772	9	dBA	4246	12	dBA	5128	8	dBA	11047	-3	dBA
Compactor_CAT64B_01_tf	Compactor--CAT CS64B	4896	9	dBA	1901	21	dBA	6397	7	dBA	12854	-4	dBA
Compresor_S375H_tf	Compressor--Sullair 375H	5189	-30	dBA	3805	-25	dBA	4915	-29	dBA	11817	-44	dBA
Excavator_CAT_D6_01_tf	EX Dozer--CAT D6	3411	11	dBA	3046	19	dBA	6756	10	dBA	11079	2	dBA
Excavator_CAT_D6_02_tf	EX Dozer--CAT D6	3670	17	dBA	2359	23	dBA	6939	9	dBA	11714	2	dBA
Excavator_CAT_D6_03_tf	EX Dozer--CAT D6	5931	12	dBA	3609	18	dBA	4629	15	dBA	12773	1	dBA
Excavator_CAT_D6_04_tf	EX Dozer--CAT D6	3558	18	dBA	4015	17	dBA	6324	11	dBA	10353	4	dBA
Dozer_CAT_D8_tf	Dozer--CAT D8	4867	26	dBA	3719	30	dBA	5196	26	dBA	11581	14	dBA
DewateringPump_01_tf	Dewatering Pump--DeWPump	5104	-1	dBA	4293	2	dBA	4817	-1	dBA	11318	-18	dBA
DewateringPump_02_tf	Dewatering Pump--DeWPump	4407	1	dBA	3698	-1	dBA	5589	-2	dBA	11205	-17	dBA
DewateringPump_03_tf	Dewatering Pump--DeWPump	4906	0	dBA	3752	-2	dBA	5152	-1	dBA	11590	-17	dBA
DewateringPump_04_tf	Dewatering Pump--DeWPump	4548	0	dBA	6493	-6	dBA	6317	-6	dBA	8419	-11	dBA
DewateringPump_05_tf	Dewatering Pump--DeWPump	5671	-4	dBA	3913	3	dBA	4542	0	dBA	12234	-21	dBA
DewateringPump_06_tf	Dewatering Pump--DeWPump	5395	-3	dBA	2048	13	dBA	6122	-6	dBA	13251	-22	dBA
DewateringPump_07_tf	Dewatering Pump--DeWPump	4919	-2	dBA	1868	15	dBA	6415	-7	dBA	12893	-22	dBA
DewateringPump_08_tf	Dewatering Pump--DeWPump	4841	-2	dBA	4800	-1	dBA	5040	-2	dBA	10593	-18	dBA
DewateringPump_09_tf	Dewatering Pump--DeWPump	5462	-2	dBA	3874	4	dBA	4692	1	dBA	12041	-18	dBA
DewateringPump_10_tf	Dewatering Pump--DeWPump	4554	-5	dBA	1804	15	dBA	6657	-8	dBA	12624	-22	dBA
DumperTruck_CAT735B_01_tf	Dump Truck --CAT 735B	MS	5	dBA	MS	10	dBA	MS	8	dBA	MS	-8	dBA
DumpTruck_CAT735_02_tf	Dump Truck --CAT 735B	MS	-3	dBA	MS	6	dBA	MS	0	dBA	MS	-16	dBA
DumpTruck_CAT735_03_tf	Dump Truck --CAT 735B	MS	5	dBA	MS	17	dBA	MS	1	dBA	MS	-9	dBA
Exca_CAT336_01_tf	Excavator--CAT 336	4335	10	dBA	3693	13	dBA	5653	8	dBA	11153	-2	dBA
Exca_CAT336_02_tf	Excavator--CAT 336	4732	10	dBA	3728	13	dBA	5302	9	dBA	11452	-3	dBA
Exca_CAT336_03_tf	Excavator--CAT 336	4365	10	dBA	6324	6	dBA	6384	6	dBA	8475	2	dBA
Exca_CAT336_04_tf	Excavator--CAT 336	5324	8	dBA	3838	13	dBA	4803	10	dBA	11926	-3	dBA
Exca_CAT336_05_tf	Excavator--CAT 336	4624	8	dBA	1846	20	dBA	6579	6	dBA	12655	-4	dBA
Exca_CAT336_06_tf	Excavator--CAT 336	5095	7	dBA	1920	19	dBA	6306	6	dBA	13026	-5	dBA
FlatBedBoomTruck_tf	Flat Bed or Boom Truck --	MS	-7	dBA	MS	-5	dBA	MS	-11	dBA	MS	-23	dBA
GroutPlant_CG630_tf	Grout Plant--CG630E	4636	-32	dBA	3715	-33	dBA	5387	-35	dBA	11379	-50	dBA
Loader_CAT950_tf	Loader--CAT950	4554	11	dBA	3710	14	dBA	5457	9	dBA	11315	-3	dBA
PickUp_F150_tf	Pick-up--F150	MS	-8	dBA	MS	0	dBA	MS	-14	dBA	MS	-24	dBA
Skidder_JD640_01_tf	Skidder--JD 640L	5052	14	dBA	3779	14	dBA	5028	14	dBA	11704	4	dBA
Skidder_JD640_02_tf	Skidder--JD 640L	4477	15	dBA	3707	16	dBA	5524	13	dBA	11254	4	dBA
TMF_DamDieselGen_100kW_case	DieselGen_100kW_Case--Diesel GenSet Casing	4562	2	dBA	3666	5	dBA	5467	0	dBA	11357	-9	dBA
Admin_misc_DieselGen_100kW_case	DieselGen_100kW_Case--Diesel GenSet Casing	4356	3	dBA	4875	2	dBA	5564	0	dBA	10096	-7	dBA
Admin_misc_DieselGen_100kW_case	DieselGen_100kW_Case--Diesel GenSet Casing	4359	3	dBA	4914	2	dBA	5569	0	dBA	10060	-9	dBA
BackHow_CAT330_mi	Backhoe--330	1888	17	dBA	5543	5	dBA	8497	-1	dBA	8304	0	dBA
BorrowForklift_4t_01_mi	FORKLIFT--Genie 4 ton Ext boom	1890	19	dBA	5563	7	dBA	8512	2	dBA	8284	2	dBA
BorrowForklift_4t_02_mi	FORKLIFT--Genie 4 ton Ext boom	1942	18	dBA	5546	7	dBA	8444	2	dBA	8303	2	dBA
BorrowForklift_4t_03_mi	FORKLIFT--Genie 4 ton Ext boom	1995	18	dBA	5564	7	dBA	8405	2	dBA	8287	2	dBA
BorrowForklift_4t_04_mi	FORKLIFT--Genie 4 ton Ext boom	4191	9	dBA	4837	7	dBA	5732	6	dBA	10003	-1	dBA
BorrowForklift_4t_05_mi	FORKLIFT--Genie 4 ton Ext boom	4275	10	dBA	4773	8	dBA	5629	7	dBA	10134	-1	dBA
BorrowForklift_4t_06_mi	FORKLIFT--Genie 4 ton Ext boom	4365	9	dBA	5017	8	dBA	5589	7	dBA	9961	-1	dBA
Compactor_CAT433_01_mi	Compactor Vib--CAT 433	2629	22	dBA	5659	14	dBA	7817	10	dBA	8290	9	dBA
Compactor_CAT433_02_mi	Compactor Vib--CAT 433	4234	17	dBA	4828	16	dBA	5684	14	dBA	10047	7	dBA
Compactor_CAT433_03_mi	Compactor Vib--CAT 433	4339	14	dBA	4889	13	dBA	5585	11	dBA	10069	4	dBA
Compactor_CAT434_04_mi	Compactor Vib--CAT CB434	4323	10	dBA	4726	9	dBA	5572	7	dBA	10217	-1	dBA
Compresor_S375H_01_mi	Compressor--Sullair 375H	4235	-24	dBA	4992	-27	dBA	5724	-29	dBA	9881	-38	dBA
Compresor_S375H_02_mi	Compressor--Sullair 375H	4248	-24	dBA	4952	-27	dBA	5698	-29	dBA	9932	-39	dBA
Compresor_S375H_03_mi	Compressor--Sullair 375H	4232	-24	dBA	4747	-26	dBA	5670	-29	dBA	10125	-39	dBA
Compresor_S375H_04_mi	Compressor--Sullair 375H	4302	-24	dBA	4969	-27	dBA	5645	-29	dBA	9958	-39	dBA
Compresor_S375H_05_mi	Compressor--Sullair 375H	2598	-16	dBA	5649	-29	dBA	7842	-34	dBA	8292	-35	dBA
Compresor_S375H_06_mi	Compressor--Sullair 375H	2578	-16	dBA	5680	-29	dBA	7889	-34	dBA	8253	-35	dBA
CraneCrawler_50t_01_mi	Crane Crawler--50t	4317	0	dBA	4799	-1	dBA	5590	-3	dBA	10140	-11	dBA
CraneCrawler_50t_02_mi	Crane Crawler--50t	4326	0	dBA	4865	-1	dBA	5593	-3	dBA	10082	-11	dBA
CraneCrawler_50t_03_mi	Crane Crawler--50t	4258	1	dBA	4826	-3	dBA	5658	-3	dBA	10067	-11	dBA
CraneHydraulic_31t_mi	Crane Hydraulic--31t	4193	12	dBA	4698	12	dBA	5704	10	dBA	10143	3	dBA
CraneRemoteTerrain_80t_01_mi	RT Crane 80T--	2602	13	dBA	5684	1	dBA	7866	-5	dBA	8255	-6	dBA
CraneRemoteTerrain_80t_02_mi	RT Crane 80T--	4270	5	dBA	5062	-2	dBA	5707	1	dBA	9837	-9	dBA

	Residence/Cabin/Lodge/Camp	Residence/Cabin/Lodge/Camp	Residence/Cabin/Lodge/Camp	Residence/Cabin/Lodge/Camp
	POR1 POR1 POR1	POR4 POR4 POR4	POR5 POR5 POR5	POR6 POR6 POR6
Point of Reception ID	**POR1**	**POR4**	**POR5**	**POR6**
Point of Reception Description				
Residence/Cabin/Lodge/Camp				
Point of reception coordinates				
X	456965	451915	451671	465139
Y	5639223	5639044	5630891	5634939
Z [2]	372	357	354	350

Notes on Table:
1. dBA = 1-hour energy equivalent sound (Leq (1-hr))
2. Height above local grade 3. MS = Mobile Source

Table A-1a: Construction Phase - Noise Source Summary

Daytime - LAeq,1hr

Project: Great Bear Project
Location: Red Lake, ON

Source ID	Source Description	Residence/Cabin/Lodge/Camp POR1 POR1 POR1 Point of Reception ID: POR1			Residence/Cabin/Lodge/Camp POR4 POR4 POR4 Point of Reception ID: POR4			Residence/Cabin/Lodge/Camp POR5 POR5 POR5 Point of Reception ID: POR5			Residence/Cabin/Lodge/Camp POR6 POR6 POR6 Point of Reception ID: POR6		
		Point of Reception Description: Residence/Cabin/Lodge/Camp			Point of Reception Description: Residence/Cabin/Lodge/Camp			Point of Reception Description: Residence/Cabin/Lodge/Camp			Point of Reception Description: Residence/Cabin/Lodge/Camp		
		Point of reception coordinates			Point of reception coordinates			Point of reception coordinates			Point of reception coordinates		
		X	Y	Z [2]	X	Y	Z [2]	X	Y	Z [2]	X	Y	Z [2]
		456965	5639223	372	451915	5639044	357	451671	5630891	354	465139	5634939	350
		Point of Reception 1			Point of Reception 4			Point of Reception 5			Point of Reception 6		
		Distance [3] (m)	Sound Level at PoR	Units [1] (dBA)	Distance [3] (m)	Sound Level at PoR	Units [1] (dBA)	Distance [3] (m)	Sound Level at PoR	Units [1] (dBA)	Distance [3] (m)	Sound Level at PoR	Units [1] (dBA)
DewateringPump_01_mi	Dewatering Pump--DeWPump	4348	2	dBA	4758	0	dBA	5550	-3	dBA	10206	-15	dBA
DewateringPump_02_mi	Dewatering Pump--DeWPump	4379	2	dBA	4986	-1	dBA	5566	-3	dBA	10003	-15	dBA
DewateringPump_03_mi	Dewatering Pump--DeWPump	5124	-1	dBA	5327	-2	dBA	4840	0	dBA	10334	-16	dBA
DewateringPump_04_mi	Dewatering Pump--DeWPump	4236	2	dBA	4704	0	dBA	5659	-3	dBA	10171	-15	dBA
DewateringPump_05_mi	Dewatering Pump--DeWPump	4201	2	dBA	4929	-1	dBA	5742	-3	dBA	9920	-15	dBA
DewateringPump_06_mi	Dewatering Pump--DeWPump	1925	15	dBA	5471	-3	dBA	8403	-11	dBA	8379	-10	dBA
DewateringPump_07_mi	Dewatering Pump--DeWPump	2118	13	dBA	5508	-3	dBA	8235	-10	dBA	8354	-10	dBA
DewateringPump_08_mi	Dewatering Pump--DeWPump	2622	10	dBA	5658	-3	dBA	7824	-10	dBA	8289	-11	dBA
DewateringPump_09_mi	Dewatering Pump--DeWPump	4378	2	dBA	5072	-2	dBA	5592	-3	dBA	9914	-15	dBA
DewateringPump_10_mi	Dewatering Pump--DeWPump	4907	-2	dBA	5988	-9	dBA	5439	-3	dBA	9380	-15	dBA
DieselGenSet_500kW_case	DieselGen_500kW_Case--	4835	-10	dBA	5529	-3	dBA	5254	-2	dBA	9832	-14	dBA
DieselGenSet_500kW_ex	DieselGen_500kW_Ex--	4838	-15	dBA	5531	-6	dBA	5251	-5	dBA	9834	-18	dBA
DozerWinch_CATD8_mi	Dozer Winch --CAT D8	3032	27	dBA	5437	20	dBA	7231	16	dBA	8674	14	dBA
DozerWinch_CATD8_mi	Dozer Winch --CAT D8	5173	2	dBA	7321	12	dBA	6441	14	dBA	7912	-4	dBA
Dozer_LGP_D4_mi	Dozer LGP--D4	4570	11	dBA	5176	9	dBA	5414	9	dBA	9969	0	dBA
DozerBladeWinch_01_mi	Dozer W/ Blade and Winch--	4288	20	dBA	5033	18	dBA	5678	17	dBA	9881	8	dBA
DozerBladeWinch_02_mi	Dozer W/ Blade and Winch--	4362	20	dBA	5016	18	dBA	5593	17	dBA	9959	9	dBA
DozerBladeWinch_03_mi	Dozer W/ Blade and Winch--	4220	20	dBA	4695	19	dBA	5675	17	dBA	10166	8	dBA
DozerBladeWinch_04_mi	Dozer W/ Blade and Winch--	3439	21	dBA	5210	15	dBA	6669	12	dBA	9119	8	dBA
DozerBladeWinch_05_mi	Dozer W/ Blade and Winch--	2628	26	dBA	5659	17	dBA	7818	12	dBA	8290	11	dBA
DumpTruck_CAT735B_01_mi	Dump Truck --CAT 735B	MS	17	dBA	MS	9	dBA	MS	6	dBA	MS	2	dBA
DumpTruck_CAT740B_02_mi	Dump Truck 40T --CAT 740B	MS	15	dBA	MS	11	dBA	MS	11	dBA	MS	7	dBA
DumpTruck_CAT740B_03_mi	Dump Truck 40T --CAT 740B	MS	13	dBA	MS	7	dBA	MS	8	dBA	MS	7	dBA
DumpTruck_CAT740B_04_mi	Dump Truck 40T --CAT 740B	MS	11	dBA	MS	6	dBA	MS	6	dBA	MS	5	dBA
Excavator_CAT330_01_mi	Excavator Hydraulic--CAT330	4887	12	dBA	7797	7	dBA	7516	7	dBA	6894	8	dBA
Excavator_CAT330_02_mi	Excavator Hydraulic--CAT330	4723	11	dBA	6320	7	dBA	5933	8	dBA	8800	3	dBA
Excavator_CAT330_03_mi	Excavator Hydraulic--CAT330	5670	8	dBA	7795	4	dBA	6391	7	dBA	7789	5	dBA
ExploMagazine_DieselGen_100kW_case	DieselGen_100kW_Case--Diesel GenSet Casing	4897	1	dBA	7815	-5	dBA	7530	-4	dBA	6876	-3	dBA
ExploMagazineDieselGenSet_100kW_ex	DieselGen_100kW_Ex--Diesel GenSet Exhaust	4899	-8	dBA	7816	-16	dBA	7528	-15	dBA	6877	-14	dBA
ExploStorage_DieselGen_100kW_case	DieselGen_100kW_Case--Diesel GenSet Casing	5379	0	dBA	8682	-6	dBA	8288	-5	dBA	5961	-2	dBA
ExploStorageDieselGenSet_100kW_ex	DieselGen_100kW_Ex--Diesel GenSet Exhaust	5380	-10	dBA	8685	-18	dBA	8290	-17	dBA	5958	-12	dBA
FlatBedTruck_10t_mi	Truck Flatbed--10t	1948	12	dBA	5530	-5	dBA	8426	-12	dBA	8319	-12	dBA
FusionMachine_01_mi	Fusion Machine--Ritmo Delta 250	4217	-10	dBA	4818	-18	dBA	5700	-17	dBA	10043	-31	dBA
FusionMachine_02_mi	Fusion Machine--Ritmo Delta 250	4199	-10	dBA	4890	-14	dBA	5735	-17	dBA	9957	-31	dBA
FusionMachine_03_mi	Fusion Machine--Ritmo Delta 250	1900	6	dBA	5631	-16	dBA	8558	-25	dBA	8216	-24	dBA
DieselGenSet_Construc_100kW_case	DieselGen_100kW_Case--Diesel GenSet Casing	2007	13	dBA	5600	0	dBA	8423	-5	dBA	8250	-5	dBA
DieselGenSet_Construc_100kW_case	DieselGen_100kW_Case--Diesel GenSet Casing	1951	13	dBA	5582	0	dBA	8464	-5	dBA	8267	-5	dBA
DieselGenSet_Construc_100kW_case	DieselGen_100kW_Case--Diesel GenSet Casing	1860	14	dBA	5552	0	dBA	8533	-5	dBA	8295	-5	dBA
JLG_125ft_01_mi	JLG--125feet	2009	24	dBA	5551	13	dBA	8380	8	dBA	8301	8	dBA
JLG_125ft_02_mi	JLG--125feet	4274	16	dBA	5003	14	dBA	5684	12	dBA	9901	6	dBA
Light_tower_02	Light Tower Diesel	3318	0	dBA	5266	0	dBA	6827	0	dBA	8994	0	dBA
Light_tower_03	Light Tower Diesel	5056	0	dBA	5246	0	dBA	4892	0	dBA	10351	0	dBA
Light_tower_04	Light Tower Diesel	3684	0	dBA	2485	0	dBA	6832	0	dBA	11632	0	dBA
Light_tower_05	Light Tower Diesel	4541	0	dBA	1790	0	dBA	6676	0	dBA	12623	0	dBA
Light_tower_06	Light Tower Diesel	4530	0	dBA	1794	0	dBA	6679	0	dBA	12612	0	dBA
Light_tower_07	Light Tower Diesel	4549	0	dBA	6438	0	dBA	6261	0	dBA	8491	0	dBA
Light_tower_08	Light Tower Diesel	4549	0	dBA	6439	0	dBA	6263	0	dBA	8489	0	dBA
Light_tower_09	Light Tower Diesel	5512	0	dBA	4216	0	dBA	4504	0	dBA	11804	0	dBA
Light_tower_10	Light Tower Diesel	5501	0	dBA	4221	0	dBA	4510	0	dBA	11789	0	dBA
Light_tower_11	Light Tower Diesel	4425	0	dBA	4161	0	dBA	5467	0	dBA	10824	0	dBA
Light_tower_12	Light Tower Diesel	4426	0	dBA	4225	0	dBA	5458	0	dBA	10768	0	dBA
Light_tower_13	Light Tower Diesel	4985	0	dBA	5741	0	dBA	5186	0	dBA	9742	0	dBA
Light_tower_14	Light Tower Diesel	5088	0	dBA	5343	0	dBA	4886	0	dBA	10281	0	dBA
Light_tower_15	Light Tower Diesel	4763	0	dBA	7905	0	dBA	7866	0	dBA	6605	0	dBA
Light_tower_16	Light Tower Diesel	4871	0	dBA	5991	0	dBA	5485	0	dBA	9341	0	dBA
Light_tower_17	Light Tower Diesel	4784	0	dBA	6279	0	dBA	5821	0	dBA	8908	0	dBA
Light_tower_18	Light Tower Diesel	4605	0	dBA	6528	0	dBA	6280	0	dBA	8425	0	dBA
Light_tower_19	Light Tower Diesel	5254	0	dBA	6719	0	dBA	5627	0	dBA	8831	0	dBA
Light_tower_20	Light Tower Diesel	5526	0	dBA	8158	0	dBA	7156	0	dBA	7033	0	dBA

Notes on Table:
1. dBA = 1-hour energy equivalent sound (Leq (1-hr))
2. Height above local grade 3. MS = Mobile Source

Table A-1a: Construction Phase - Noise Source Summary

Daytime - LAeq,1hr

Project: Great Bear Project
Location: Red Lake, ON

Source ID	Source Description	Residence/Cabin/Lodge/Camp POR1 POR1 POR1 Point of Reception ID: POR1			Residence/Cabin/Lodge/Camp POR4 POR4 POR4 Point of Reception ID: POR4			Residence/Cabin/Lodge/Camp POR5 POR5 POR5 Point of Reception ID: POR5			Residence/Cabin/Lodge/Camp POR6 POR6 POR6 Point of Reception ID: POR6		
		Point of Reception Description: Residence/Cabin/Lodge/Camp			Point of Reception Description: Residence/Cabin/Lodge/Camp			Point of Reception Description: Residence/Cabin/Lodge/Camp			Point of Reception Description: Residence/Cabin/Lodge/Camp		
		Point of reception coordinates			Point of reception coordinates			Point of reception coordinates			Point of reception coordinates		
		X	Y	Z [2]	X	Y	Z [2]	X	Y	Z [2]	X	Y	Z [2]
		456965	5639223	372	451915	5639044	357	451671	5630891	354	465139	5634939	350
		Point of Reception 1			Point of Reception 4			Point of Reception 5			Point of Reception 6		
		Distance [3] (m)	Sound Level at PoR	Units [1] (dBA)	Distance [3] (m)	Sound Level at PoR	Units [1] (dBA)	Distance [3] (m)	Sound Level at PoR	Units [1] (dBA)	Distance [3] (m)	Sound Level at PoR	Units [1] (dBA)
Light_tower_21	Light Tower Diesel	4794	0	dBA	7914	0	dBA	7835	0	dBA	6621	0	dBA
Light_tower_23	Light Tower Diesel	3440	0	dBA	6035	0	dBA	7230	0	dBA	8190	0	dBA
Light_tower_24	Light Tower Diesel	3853	0	dBA	5836	0	dBA	6590	0	dBA	8677	0	dBA
Light_tower_25	Light Tower Diesel	4262	0	dBA	7313	0	dBA	7671	0	dBA	7063	0	dBA
Light_tower_26	Light Tower Diesel	4633	0	dBA	8728	0	dBA	9601	0	dBA	5217	0	dBA
Light_tower_27	Light Tower Diesel	2624	0	dBA	5724	0	dBA	7875	0	dBA	8217	0	dBA
Light_tower_28	Light Tower Diesel	4610	0	dBA	4973	0	dBA	5313	0	dBA	10212	0	dBA
Light_tower_29	Light Tower Diesel	2121	0	dBA	5553	0	dBA	8266	0	dBA	8309	0	dBA
Light_tower_30	Light Tower Diesel	1898	0	dBA	5518	0	dBA	8468	0	dBA	8329	0	dBA
Light_tower_31	Light Tower Diesel	1990	0	dBA	5547	0	dBA	8397	0	dBA	8304	0	dBA
Light_tower_32	Light Tower Diesel	5747	0	dBA	8121	0	dBA	6771	0	dBA	7374	0	dBA
Light_tower_33	Light Tower Diesel	5753	0	dBA	8145	0	dBA	6800	0	dBA	7343	0	dBA
Light_tower_34	Light Tower Diesel	5899	0	dBA	8453	0	dBA	7084	0	dBA	7026	0	dBA
Light_tower_35	Light Tower Diesel	5925	0	dBA	8486	0	dBA	7100	0	dBA	7005	0	dBA
Light_tower_36	Light Tower Diesel	6040	0	dBA	8556	0	dBA	7046	0	dBA	7044	0	dBA
Light_tower_37	Light Tower Diesel	6079	0	dBA	8598	0	dBA	7058	0	dBA	7027	0	dBA
Light_tower_38	Light Tower Diesel	5651	0	dBA	6933	0	dBA	5316	0	dBA	9004	0	dBA
Light_tower_39	Light Tower Diesel	5665	0	dBA	6968	0	dBA	5334	0	dBA	8974	0	dBA
Light_tower_40	Light Tower Diesel	5011	0	dBA	6446	0	dBA	5679	0	dBA	8925	0	dBA
LightingPlant_41	Light Tower Diesel	4602	0	dBA	4940	0	dBA	5314	0	dBA	10239	0	dBA
LightingPlant_42	Light Tower Diesel	4487	0	dBA	4885	0	dBA	5426	0	dBA	10195	0	dBA
LightingPlant_43	Light Tower Diesel	4481	0	dBA	5014	0	dBA	5463	0	dBA	10060	0	dBA
LightingPlant_44	Light Tower Diesel	4630	0	dBA	5073	0	dBA	5316	0	dBA	10129	0	dBA
Light_tower_01	Light Tower Diesel	4277	0	dBA	4896	0	dBA	5652	0	dBA	10013	0	dBA
Light_tower_22	Light Tower Diesel	4977	0	dBA	7863	0	dBA	7490	0	dBA	6882	0	dBA
ManLiftArticulated_60ft_01_mi	Manlift Articulating--60feet	1911	19	dBA	5607	8	dBA	8527	3	dBA	8240	3	dBA
ManLiftArticulated_60ft_02_mi	Manlift Articulating--60feet	1967	19	dBA	5623	8	dBA	8483	3	dBA	8225	3	dBA
ManLiftArticulated_60ft_03_mi	Manlift Articulating--60feet	2020	19	dBA	5642	8	dBA	8444	3	dBA	8209	3	dBA
ManLiftArticulated_60ft_04_mi	Manlift Articulating--60feet	4325	11	dBA	5036	9	dBA	5638	8	dBA	9908	1	dBA
ManLiftArticulated_60ft_05_mi	Manlift Articulating--60feet	4347	10	dBA	4724	10	dBA	5546	7	dBA	10239	0	dBA
ManLiftArticulated_60ft_06_mi	Manlift Articulating--60feet	4276	11	dBA	4872	9	dBA	5649	8	dBA	10035	0	dBA
Mill_DieselPower_100kW_case_1	DieselGen_100kW_Case--Diesel GenSet Casing	4528	2	dBA	5002	1	dBA	5408	0	dBA	10112	-7	dBA
Mill_DieselPower_100kW_case_2	DieselGen_100kW_Case--Diesel GenSet Casing	4528	2	dBA	5002	1	dBA	5408	0	dBA	10112	-7	dBA
Mill_DieselPower_100kW_case_3	DieselGen_100kW_Case--Diesel GenSet Casing	4528	2	dBA	5002	1	dBA	5409	0	dBA	10112	-7	dBA
Mill_DieselPower_100kW_case_5	DieselGen_100kW_Case--Diesel GenSet Casing	4527	2	dBA	5002	1	dBA	5409	0	dBA	10112	-7	dBA
Mill_DieselPower_100kW_case_4	DieselGen_100kW_Case--Diesel GenSet Casing	4528	2	dBA	5002	1	dBA	5409	0	dBA	10112	-7	dBA
Mill_misc_DieselGenSet_100kW_ex_1	DieselGen_100kW_Ex--Diesel GenSet Exhaust	4528	-8	dBA	5002	-9	dBA	5408	-9	dBA	10112	-20	dBA
NaturalGasGen_1300kW	NG_1300kW_all--Natural Gas Generator; for both case and exhaust	4911	9	dBA	5460	7	dBA	5134	9	dBA	9981	0	dBA
NaturalGasGen_1300kW	NG_1300kW_all--Natural Gas Generator; for both case and exhaust	4922	9	dBA	5465	7	dBA	5124	9	dBA	9986	0	dBA
NaturalGasGen_1300kW	NG_1300kW_all--Natural Gas Generator; for both case and exhaust	4903	10	dBA	5458	7	dBA	5143	9	dBA	9975	0	dBA
NaturalGasGen_1300kW	NG_1300kW_all--Natural Gas Generator; for both case and exhaust	4907	10	dBA	5459	7	dBA	5138	9	dBA	9978	0	dBA
NaturalGasGen_1300kW	NG_1300kW_all--Natural Gas Generator; for both case and exhaust	4917	9	dBA	5463	7	dBA	5129	9	dBA	9983	0	dBA
NaturalGasGen_1300kW	NG_1300kW_all--Natural Gas Generator; for both case and exhaust	4927	9	dBA	5467	7	dBA	5119	9	dBA	9989	0	dBA
DieselGenSet_500kW_case	DieselGen_500kW_Case--	4898	-1	dBA	5452	-4	dBA	5146	-3	dBA	9977	-11	dBA
DieselGenSet_500kW_case	DieselGen_500kW_Case--	4906	-2	dBA	5454	-4	dBA	5138	-2	dBA	9982	-12	dBA
DieselGenSet_500kW_case	DieselGen_500kW_Case--	4914	-2	dBA	5456	-4	dBA	5129	-2	dBA	9988	-12	dBA
DieselGenSet_500kW_case	DieselGen_500kW_Case--	4923	-2	dBA	5460	-4	dBA	5120	-2	dBA	9993	-12	dBA
RoadGrader_CAT16_01_mi	Road Grader--CAT 16	MS	13	dBA	MS	1	dBA	MS	-1	dBA	MS	-8	dBA
RigidTruck_150t_mi	Rigid Truck--150t	MS	33	dBA	MS	23	dBA	MS	22	dBA	MS	17	dBA
RigidTruck_150t_mi	Rigid Truck--150t	MS	19	dBA	MS	16	dBA	MS	15	dBA	MS	9	dBA
SecurityShack_DieselGen_100kW_Case	DieselGen_100kW_Case--Diesel GenSet Casing	1169	18	dBA	5517	-1	dBA	9196	-7	dBA	8410	-6	dBA
Telehandler_CAT1055_mi	Telehandler--	4296	11	dBA	4896	9	dBA	5632	8	dBA	10027	1	dBA
DixieWaterPumpDieselGen_100kW_case	DieselGen_100kW_Case--Diesel GenSet Casing	5511	-2	dBA	6390	-3	dBA	4980	1	dBA	9537	-7	dBA
DieselWaterPump_Dixie_100kW_ex	DieselGen_100kW_Ex--Diesel GenSet Exhaust	5510	-13	dBA	6392	-14	dBA	4983	-8	dBA	9534	-19	dBA
WaterTruck_CAT745_mi	Truck (Water) --	MS	19	dBA	MS	11	dBA	MS	9	dBA	MS	2	dBA
WeldMachine_Vantage400_01_mi	Welding Machine--Vantage 400	4265	1	dBA	4796	-1	dBA	5645	-3	dBA	10102	-11	dBA
WeldMachine_Vantage400_02_mi	Welding Machine--Vantage 400	4204	1	dBA	4778	-1	dBA	5706	-3	dBA	10073	-11	dBA
WeldMachine_Vantage400_03_mi	Welding Machine--Vantage 400	1898	11	dBA	5600	-2	dBA	8535	-8	dBA	8247	-7	dBA
WheelLoader_CAT950_01_mi	Wheel Loader--	1933	21	dBA	5502	8	dBA	8419	2	dBA	8348	2	dBA

Notes on Table:
1. dBA = 1-hour energy equivalent sound (Leq (1-hr))
2. Height above local grade 3. MS = Mobile Source

Table A-1a: Construction Phase - Noise Source Summary

Daytime - LAeq,1hr

Project: Great Bear Project
Location: Red Lake, ON

Source ID	Source Description	Residence/Cabin/Lodge/Camp POR1 POR1 POR1 Point of Reception ID: POR1			Residence/Cabin/Lodge/Camp POR4 POR4 POR4 Point of Reception ID: POR4			Residence/Cabin/Lodge/Camp POR5 POR5 POR5 Point of Reception ID: POR5			Residence/Cabin/Lodge/Camp POR6 POR6 POR6 Point of Reception ID: POR6		
		Point of Reception Description: Residence/Cabin/Lodge/Camp			Point of Reception Description: Residence/Cabin/Lodge/Camp			Point of Reception Description: Residence/Cabin/Lodge/Camp			Point of Reception Description: Residence/Cabin/Lodge/Camp		
		Point of reception coordinates			Point of reception coordinates			Point of reception coordinates			Point of reception coordinates		
		X	Y	Z [2]	X	Y	Z [2]	X	Y	Z [2]	X	Y	Z [2]
		456965	5639223	372	451915	5639044	357	451671	5630891	354	465139	5634939	350
		Point of Reception 1			Point of Reception 4			Point of Reception 5			Point of Reception 6		
		Distance [3] (m)	Sound Level at PoR	Units [1] (dBA)	Distance [3] (m)	Sound Level at PoR	Units [1] (dBA)	Distance [3] (m)	Sound Level at PoR	Units [1] (dBA)	Distance [3] (m)	Sound Level at PoR	Units [1] (dBA)
WheelLoader_CAT950_02_mi	Wheel Loader--	4330	11	dBA	4837	9	dBA	5584	7	dBA	10113	-1	dBA
WheelLoader_CAT966_01_mi	Loader (FEL)--CAT 966	MS	4	dBA	MS	-3	dBA	MS	-5	dBA	MS	-10	dBA
Loader_CAT966_02_mi	Loader (FEL)--CAT 966	MS	-3	dBA	MS	-7	dBA	MS	-8	dBA	MS	-14	dBA
WheelLoader_CAT966_03_mi	Loader (FEL)--CAT 966	MS	-3	dBA	MS	-11	dBA	MS	-12	dBA	MS	-13	dBA
DeWaterinMiscDieselGen_100kW_case	DieselGen_100kW_Case--Diesel GenSet Casing	4834	1	dBA	7218	-4	dBA	6770	-3	dBA	7705	-5	dBA
DieselDewatering_misc_100kW_ex	DieselGen_100kW_Ex--Diesel GenSet Exhaust	4834	-8	dBA	7219	-15	dBA	6771	-14	dBA	7704	-16	dBA
ZoomBoomTruck_01_mi	Zoom Boom--	4287	13	dBA	4806	11	dBA	5623	10	dBA	10109	2	dBA
ZoomBoomTruck_02_mi	Zoom Boom--	4241	13	dBA	4869	11	dBA	5685	9	dBA	10011	2	dBA
ZoomBoomTruck_03_mi	Zoom Boom--	4812	11	dBA	5122	11	dBA	5129	11	dBA	10244	2	dBA
ZoomBoomTruck_04_mi	Zoom Boom--	1867	22	dBA	5502	10	dBA	8485	5	dBA	8346	5	dBA
AirCompressor_S185Q_01_pr	Air Compressor--Sullair 185Q	4557	-13	dBA	4914	-16	dBA	5357	-15	dBA	10226	-26	dBA
AirCompressor_S185Q_02_pr	Air Compressor--Sullair 185Q	4567	-13	dBA	5033	-15	dBA	5374	-15	dBA	10114	-26	dBA
BatchPlant_crf	Batch Plant -- Ref FHA -- Single 500 Hz band noise	4879	15	dBA	5990	12	dBA	5475	14	dBA	9350	2	dBA
BatchPlant_pr	Batch Plant -- Ref FHA -- Single 500 Hz band noise	4591	17	dBA	5012	15	dBA	5343	14	dBA	10157	-1	dBA
BackhoeLoader_CAT430_pr	Backhoe Loader--Cat 430	4562	0	dBA	5008	-1	dBA	5373	-2	dBA	10135	-11	dBA
BoomTruck_25t_01_pr	Boom Truck 25t--Terex 5092, 2-Stage Jib	4525	10	dBA	4942	10	dBA	5398	8	dBA	10169	-3	dBA
BoomTruck_25t_02_pr	Boom Truck 25t--Terex 5092, 2-Stage Jib	4541	11	dBA	4948	8	dBA	5382	8	dBA	10177	-3	dBA
ConcreteMixer_pr	Concrete mixer-- 250 L	4624	-13	dBA	4996	-15	dBA	5303	-15	dBA	10202	-27	dBA
Compresor_S375H_01_pr	Compressor--Sullair 375H	4563	-27	dBA	4946	-29	dBA	5357	-29	dBA	10199	-40	dBA
Compresor_S375H_02_pr	Compressor--Sullair 375H	4484	-26	dBA	4937	-28	dBA	5440	-29	dBA	10140	-40	dBA
Compresor_S375H_03_pr	Compressor--Sullair 375H	4522	-27	dBA	5005	-29	dBA	5416	-29	dBA	10104	-40	dBA
Compresor_S375H_04_pr	Compressor--Sullair 375H	4572	-27	dBA	5013	-28	dBA	5363	-29	dBA	10139	-40	dBA
Compresor_S375H_05_pr	Compressor--Sullair 375H	4770	-27	dBA	5082	-28	dBA	5164	-28	dBA	10246	-40	dBA
Compresor_S375H_06_pr	Compressor--Sullair 375H	5016	-28	dBA	5251	-29	dBA	4938	-28	dBA	10306	-41	dBA
Compresor_S375H_07_pr	Compressor--Sullair 375H	4873	-29	dBA	5982	-32	dBA	5477	-30	dBA	9354	-40	dBA
Compresor_S375H_08_pr	Compressor--Sullair 375H	2644	-17	dBA	5672	-30	dBA	7812	-36	dBA	8279	-37	dBA
Compresor_S375H_09_pr	Compressor--Sullair 375H	2560	-17	dBA	5659	-30	dBA	7891	-36	dBA	8271	-37	dBA
Compresor_S375H_10_pr	Compressor--Sullair 375H	2596	-17	dBA	5719	-30	dBA	7900	-36	dBA	8216	-37	dBA
Compresor_S375H_11_pr	Compressor--Sullair 375H	2582	-17	dBA	5705	-30	dBA	7904	-36	dBA	8227	-37	dBA
Compresor_S375H_12_pr	Compressor--Sullair 375H	2563	-17	dBA	5684	-30	dBA	7907	-36	dBA	8245	-37	dBA
Compresor_S375H_13_pr	Compressor--Sullair 375H	2546	-17	dBA	5670	-31	dBA	7914	-36	dBA	8257	-38	dBA
ConcreteInternalVibrator_01_pr	Concrete Internal Vibrator--	4776	-43	dBA	5116	-44	dBA	5167	-44	dBA	10217	-56	dBA
ConcreteInternalVibrator_02_pr	Concrete Internal Vibrator--	4625	-42	dBA	4980	-44	dBA	5298	-44	dBA	10218	-56	dBA
ConcreteInternalVibrator_03_pr	Concrete Internal Vibrator--	4554	-43	dBA	5048	-44	dBA	5392	-45	dBA	10087	-55	dBA
ConcreteInternalVibrator_04_pr	Concrete Internal Vibrator--	4482	-44	dBA	4928	-46	dBA	5440	-45	dBA	10148	-56	dBA
ConcretePumpTruck_pr	Concrete Pump Truck--	MS	-7	dBA	MS	-8	dBA	MS	-8	dBA	MS	-18	dBA
ConcreteTruck_8m3_pr	Concrete Truck --8m3 capacity, 6x4, 310 HP	MS	-3	dBA	MS	-7	dBA	MS	-7	dBA	MS	-14	dBA
ConcreteVibratoryPowerScreen_01_pr	Concrete Vibratory Power Screeds--	4580	-10	dBA	4967	-12	dBA	5344	-13	dBA	10192	-24	dBA
ConcreteVibratoryPowerScreen_02_pr	Concrete Vibratory Power Screeds--	4491	-10	dBA	4965	-13	dBA	5439	-13	dBA	10118	-24	dBA
ConcreteTrowelPower_01_pr	Concrete Trowel Power--	4630	-8	dBA	5030	-10	dBA	5304	-10	dBA	10173	-22	dBA
ConcreteTrowelPower_02_pr	Concrete Trowel Power--	4787	-9	dBA	5077	-10	dBA	5145	-10	dBA	10266	-22	dBA
Crane_150t_pr	Crawler Conventional Crane 150T (used)--	4514	1	dBA	5010	-1	dBA	5426	-1	dBA	10092	-12	dBA
CraneDEMAG_300t_pr	300T Crane - DEMAG-- DEMAG	4511	8	dBA	4991	7	dBA	5424	6	dBA	10109	-5	dBA
Crane_80t_01_pr	Crane--80t	5144	1	dBA	5281	0	dBA	4804	2	dBA	10403	-11	dBA
Crane_80t_02_pr	Crane--80t	4550	2	dBA	4988	0	dBA	5381	0	dBA	10146	-11	dBA
CraneRemoteTerrain_80t_01_pr	RT Crane 80T--	4860	2	dBA	5989	-1	dBA	5498	1	dBA	9333	-9	dBA
CraneRemoteTerrain_80t_02_pr	RT Crane 80T--	5040	3	dBA	5236	2	dBA	4907	3	dBA	10346	-9	dBA
CraneTerex_RT555_pr	Crane 55t--Terex RT555, 2-Stage Jib	4509	2	dBA	4928	2	dBA	5412	1	dBA	10170	-10	dBA
CraneTerex_RT670_01_pr	Crane 70t--Terex RT670	4508	-1	dBA	4950	-1	dBA	5417	-2	dBA	10148	-13	dBA
CraneTerex_RT670_02_pr	Crane 70t--Terex RT670	4508	1	dBA	4970	-2	dBA	5422	-2	dBA	10127	-13	dBA
Dozer_CAT_D8_01_pr	Dozer--CAT D8	4540	22	dBA	4971	21	dBA	5387	20	dBA	10154	11	dBA
Dozer_CAT_D8_02_pr	Dozer--CAT D8	5116	18	dBA	5292	18	dBA	4839	19	dBA	10363	8	dBA
DrumRoll_01_pr	Manual Drum Roller	4786	-6	dBA	5101	-7	dBA	5152	-7	dBA	10241	-19	dBA
DrumRoller_66in_pr	Drum Roller--66"	4540	15	dBA	4971	14	dBA	5387	13	dBA	10154	4	dBA
DumperTruck_01_pr	Dumper Truck	MS	-10	dBA	MS	-7	dBA	MS	-15	dBA	MS	-26	dBA
DumperTruck_02_pr	Dumper Truck	MS	-13	dBA	MS	-10	dBA	MS	-18	dBA	MS	-29	dBA
Exca_120t_01_pr	Excavator--120t	5171	-1	dBA	5323	-1	dBA	4786	0	dBA	10386	-10	dBA
Exca_120t_02_pr	Excavator--120t	4553	1	dBA	4966	-1	dBA	5372	-1	dBA	10170	-10	dBA
Exca_35t_01_pr	Excavator--35t	5123	6	dBA	5267	5	dBA	4823	6	dBA	10397	-4	dBA

Notes on Table:
1. dBA = 1-hour energy equivalent sound (Leq (1-hr))
2. Height above local grade 3. MS = Mobile Source

Table A-1a: Construction Phase - Noise Source Summary

Daytime - LAeq,1hr

Project: Great Bear Project
Location: Red Lake, ON

		Residence/Cabin/Lodge/Camp POR1 POR1 POR1	Residence/Cabin/Lodge/Camp POR4 POR4 POR4	Residence/Cabin/Lodge/Camp POR5 POR5 POR5	Residence/Cabin/Lodge/Camp POR6 POR6 POR6
		Point of Reception ID	**Point of Reception ID**	**Point of Reception ID**	**Point of Reception ID**
		POR1	**POR4**	**POR5**	**POR6**
		Point of Reception Description	**Point of Reception Description**	**Point of Reception Description**	**Point of Reception Description**
		Residence/Cabin/Lodge/Camp	**Residence/Cabin/Lodge/Camp**	**Residence/Cabin/Lodge/Camp**	**Residence/Cabin/Lodge/Camp**
		Point of reception coordinates	**Point of reception coordinates**	**Point of reception coordinates**	**Point of reception coordinates**
		X **Y** **Z [2]**	**X** **Y** **Z [2]**	**X** **Y** **Z [2]**	**X** **Y** **Z [2]**
		456965 5639223 372	451915 5639044 357	451671 5630891 354	465139 5634939 350

Source ID	Source Description	Point of Reception 1			Point of Reception 4			Point of Reception 5			Point of Reception 6		
		Distance [3] (m)	Sound Level at PoR	Units [1] (dBA)	Distance [3] (m)	Sound Level at PoR	Units [1] (dBA)	Distance [3] (m)	Sound Level at PoR	Units [1] (dBA)	Distance [3] (m)	Sound Level at PoR	Units [1] (dBA)
Exca_35t_02_pr	Excavator--35t	4514	6	dBA	4962	6	dBA	5414	5	dBA	10141	-4	dBA
FlatBedBoomTruck_HX620_pr	Flat Bed or Boom Truck --	MS	0	dBA	MS	-5	dBA	MS	-6	dBA	MS	-14	dBA
ForkliftGenie_4t_01_pr	FORKLIFT--Genie 4 ton Ext boom	4478	8	dBA	4898	8	dBA	5438	7	dBA	10175	-1	dBA
ForkliftGenie_4t_02_pr	FORKLIFT--Genie 4 ton Ext boom	4591	9	dBA	4955	8	dBA	5329	7	dBA	10214	-1	dBA
ForkliftGenie_4t_03_pr	FORKLIFT--Genie 4 ton Ext boom	4507	8	dBA	5023	8	dBA	5437	7	dBA	10072	-1	dBA
ForkliftGenie_4t_04_pr	FORKLIFT--Genie 4 ton Ext boom	4537	9	dBA	4906	8	dBA	5377	7	dBA	10217	-1	dBA
ForkliftGenie_4t_05_pr	FORKLIFT--Genie 4 ton Ext boom	4609	9	dBA	5043	8	dBA	5331	7	dBA	10141	-1	dBA
ForkliftGenie_4t_06_pr	FORKLIFT--Genie 4 ton Ext boom	4627	9	dBA	4958	8	dBA	5291	7	dBA	10243	-1	dBA
FusionMachine_01_pr	Fusion Machine--Ritmo Delta 250	4551	-14	dBA	4995	-15	dBA	5382	-15	dBA	10139	-31	dBA
FusionMachine_02_pr	Fusion Machine--Ritmo Delta 250	4734	-13	dBA	5090	-15	dBA	5206	-15	dBA	10205	-31	dBA
FusionMachine_03_pr	Fusion Machine--Ritmo Delta 250	4581	-13	dBA	4918	-16	dBA	5332	-15	dBA	10243	-31	dBA
FusionMachine_04_pr	Fusion Machine--Ritmo Delta 250	4567	-14	dBA	4910	-17	dBA	5346	-15	dBA	10238	-31	dBA
GenSet_13kVA_01_pr	Genset-- 13kVA	5068	-3	dBA	5227	-3	dBA	4874	-2	dBA	10382	-11	dBA
GenSet_13kVA_02_pr	Genset-- 13kVA	4585	-2	dBA	4984	-3	dBA	5342	-3	dBA	10180	-11	dBA
GenSet_13kVA_03_pr	Genset-- 13kVA	4807	-2	dBA	5094	-3	dBA	5127	-3	dBA	10268	-11	dBA
GenSet_13kVA_04_pr	Genset-- 13kVA	4862	-3	dBA	5982	-6	dBA	5490	-4	dBA	9343	-10	dBA
GenSet_13kVA_05_pr	Genset-- 13kVA	4888	-3	dBA	5987	-5	dBA	5461	-4	dBA	9363	-10	dBA
GenSet_13kVA_06_pr	Genset-- 13kVA	5028	-3	dBA	5262	-3	dBA	4928	-2	dBA	10306	-11	dBA
Genset_75k_01_pr	Genset--75kVA	4579	-12	dBA	4997	-13	dBA	5351	-14	dBA	10162	-23	dBA
Genset_75k_02_pr	Genset--75kVA	4489	-13	dBA	4975	-13	dBA	5443	-14	dBA	10107	-23	dBA
RoadGrader_CAT16_02_pr	Road Grader--CAT 16	5116	7	dBA	5292	7	dBA	4839	8	dBA	10363	-4	dBA
RoadGrader_CAT16_01_pr	Road Grader--CAT 16	4540	8	dBA	4972	8	dBA	5388	6	dBA	10153	-4	dBA
Heater_350kBTU_pr	Heater--Indirect Fire 350000 BTU	4591	-3	dBA	4927	-4	dBA	5323	-5	dBA	10243	-15	dBA
JumpinJackCompactor_01_pr	Compactor-- Jumping Jack	4623	-11	dBA	4939	-12	dBA	5291	-13	dBA	10259	-24	dBA
JumpinJackCompactor_02_pr	Compactor-- Jumping Jack	4632	-11	dBA	4939	-12	dBA	5281	-13	dBA	10267	-24	dBA
LiftTruck_2t_pr	Lift Truck 2.5t--MH25-4, 4x4, 60HP	4529	6	dBA	5033	5	dBA	5415	4	dBA	10081	-4	dBA
ManDruRol	Manual Drum Roller	4609	-9	dBA	5058	-11	dBA	5335	-11	dBA	10125	-22	dBA
MiniExcavator_CAT305_pr	Mini Excavator--Cat 305D CR	4577	-2	dBA	5022	-3	dBA	5360	-4	dBA	10134	-12	dBA
PortableGenset_01_pr	Portable Genset Diesel--3k	4595	-13	dBA	5026	-14	dBA	5342	-15	dBA	10145	-24	dBA
PortableGenset_02_pr	Portable Genset Diesel--3k	4560	-13	dBA	4930	-14	dBA	5357	-15	dBA	10212	-24	dBA
PortableGenset_03_pr	Portable Genset Diesel--3k	4454	-13	dBA	4894	-14	dBA	5463	-15	dBA	10158	-24	dBA
PortableGenset_04_pr	Portable Genset Diesel--3k	4503	-13	dBA	5008	-18	dBA	5437	-15	dBA	10085	-27	dBA
PrimaryDrill_D65_01_pr	Primary Drill--140mm SmartRoc D65	4575	25	dBA	4982	24	dBA	5353	23	dBA	10173	15	dBA
PrimaryDrill_D65_02_pr	Primary Drill--140mm SmartRoc D65	4478	25	dBA	4965	23	dBA	5454	23	dBA	10107	15	dBA
PickUpTruck_F150_01_pr	Pick-up--F150	MS	-3	dBA	MS	-12	dBA	MS	-16	dBA	MS	-22	dBA
PickUpTruck_F150_02_pr	Pick-up--F150	MS	-16	dBA	MS	-18	dBA	MS	-18	dBA	MS	-31	dBA
RoadGrader_CAT16_02_pr	Road Grader--CAT 16	MS	-1	dBA	MS	3	dBA	MS	3	dBA	MS	-13	dBA
RoadGrader_CAT16_pr	Road Grader--CAT 16	MS	0	dBA	MS	6	dBA	MS	-4	dBA	MS	-14	dBA
RockCrusher_UD211_crf	Rock Crusher--Sandvik UD211	4890	20	dBA	5993	18	dBA	5463	19	dBA	9357	11	dBA
RockCrusher_UD211_pr	Rock Crusher--Sandvik UD211	4777	23	dBA	5436	21	dBA	5279	23	dBA	9880	12	dBA
ScissorLift_13m_01_pr	Scissor lift--13.1 m capacity, 4X4	4541	14	dBA	4935	13	dBA	5379	12	dBA	10190	4	dBA
ScissorLift_13m_02_pr	Scissor lift--13.1 m capacity, 4X4	4557	14	dBA	5017	12	dBA	5381	12	dBA	10122	4	dBA
ServiceManLift_18m_01_pr	Manlift 18m-- 600 AJ JLG Diesel, RT	4528	8	dBA	4994	7	dBA	5407	6	dBA	10120	-2	dBA
ServiceManLift_18m_02_pr	Manlift 18m-- 600 AJ JLG Diesel, RT	4551	8	dBA	5023	7	dBA	5388	6	dBA	10111	-2	dBA
ServiceManLift_18m_03_pr	Manlift 18m-- 600 AJ JLG Diesel, RT	4542	8	dBA	4904	7	dBA	5371	6	dBA	10224	-2	dBA
ServicePlatformTruck_20ft_pr	20' Service Platform Truck--	4527	0	dBA	5016	-2	dBA	5413	-3	dBA	10097	-14	dBA
SkidSteerProcessPlant_01_pr	Skidsteer--	4596	2	dBA	4970	1	dBA	5327	0	dBA	10203	-12	dBA
SkidSteerProcessPlant_02_pr	Skidsteer--	4509	1	dBA	4938	-1	dBA	5414	0	dBA	10160	-12	dBA
SkidSteerLoader_CAT252_pr	Skid Steer Loader--Cat 252B - Bucket & Fork	4559	-1	dBA	4991	-2	dBA	5373	-2	dBA	10150	-12	dBA
TandemWaterTruck_2500_pr	Tadem Water Trucks-- 2500 gls	MS	-11	dBA	MS	-12	dBA	MS	-13	dBA	MS	-26	dBA
Telehandler_CAT1055_01_pr	Telehandler--Cat TL1055	4569	9	dBA	5045	8	dBA	5375	8	dBA	10103	0	dBA
Telehandler_CAT1055_02_pr	Telehandler--Cat TL1055	4569	9	dBA	5061	8	dBA	5379	8	dBA	10087	-1	dBA
VibratingPlateCompactor_01_pr	Vibrating Plate Compactor--600mm x 600mm	4624	-9	dBA	4971	-10	dBA	5297	-11	dBA	10227	-22	dBA
VibratingPlateCompactor_02_pr	Vibrating Plate Compactor--600mm x 600mm	4556	-9	dBA	5040	-10	dBA	5388	-11	dBA	10098	-22	dBA
VibratingPlateCompactor_03_pr	Vibrating Plate Compactor--600mm x 600mm	4640	-9	dBA	5079	-12	dBA	5306	-11	dBA	10131	-22	dBA
WeldMachine_Vantage400_01_pr	Welding Machine--Vantage 400	4576	-7	dBA	4945	-8	dBA	5343	-9	dBA	10211	-17	dBA
WeldMachine_Vantage400_02_pr	Welding Machine--Vantage 400	4490	-8	dBA	4945	-9	dBA	5436	-9	dBA	10137	-17	dBA
WeldMachine_Vantage400_03_pr	Welding Machine--Vantage 400	4475	-12	dBA	4984	-8	dBA	5461	-9	dBA	10085	-24	dBA
WeldMachine_Vantage400_04_pr	Welding Machine--Vantage 400	4593	-7	dBA	5037	-8	dBA	5346	-9	dBA	10133	-17	dBA

Notes on Table:
1. dBA = 1-hour energy equivalent sound (Leq (1-hr))
2. Height above local grade 3. MS = Mobile Source

Table A-1a: Construction Phase - Noise Source Summary

Daytime - LAeq,1hr

Project: Great Bear Project
Location: Red Lake, ON

Source ID	Source Description	Residence/Cabin/Lodge/Camp POR1 POR1 POR1 Point of Reception ID: POR1 Point of Reception 1			Residence/Cabin/Lodge/Camp POR4 POR4 POR4 Point of Reception ID: POR4 Point of Reception 4			Residence/Cabin/Lodge/Camp POR5 POR5 POR5 Point of Reception ID: POR5 Point of Reception 5			Residence/Cabin/Lodge/Camp POR6 POR6 POR6 Point of Reception ID: POR6 Point of Reception 6		
		Distance [3] (m)	Sound Level at PoR	Units [1] (dBA)	Distance [3] (m)	Sound Level at PoR	Units [1] (dBA)	Distance [3] (m)	Sound Level at PoR	Units [1] (dBA)	Distance [3] (m)	Sound Level at PoR	Units [1] (dBA)
WeldMachine_Vantage400_05_pr	Welding Machine--Vantage 400	4580	-1	dBA	4954	-2	dBA	5340	-2	dBA	10206	-11	dBA
WeldMachine_Vantage400_06_pr	Welding Machine--Vantage 400	4575	-1	dBA	4931	-2	dBA	5341	-2	dBA	10224	-11	dBA
WeldMachine_Vantage400_07_pr	Welding Machine--Vantage 400	5018	-3	dBA	5226	-2	dBA	4929	-1	dBA	10334	-11	dBA
WheelLoader_CAT950_pr	Wheel Loader with Quick Coupler--Cat 950H	4506	7	dBA	5006	6	dBA	5434	5	dBA	10089	-4	dBA
BackHoe_PC1250_q	Quarry Source - Production Backhoe--PC1250 (6.7m3)	5287	8	dBA	2232	18	dBA	5975	6	dBA	13031	-6	dBA
BackHoe_330_bp	Backhoe--330	4733	7	dBA	911	26	dBA	7378	1	dBA	13221	-7	dBA
BlastLoaderCAT262	Blasting Loader--CAT 262	6064	2	dBA	3062	10	dBA	5096	4	dBA	13342	-8	dBA
BlastTruck_F350_q	Blasters Truck--F350	MS	-8	dBA	MS	-8	dBA	MS	-8	dBA	MS	-18	dBA
Dozer_CAT_D6_bp	Dozer - D6--CAT D6	4469	16	dBA	1675	27	dBA	6822	10	dBA	12633	1	dBA
Dozer_CAT_D8_q	Dozer--CAT D8	6101	16	dBA	3042	24	dBA	5117	18	dBA	13401	4	dBA
DewateringPump_01_q	Dewatering Pump--DeWPump	6048	-4	dBA	2916	9	dBA	5243	-2	dBA	13426	-21	dBA
DewateringPump_02_q	Dewatering Pump--DeWPump	6242	-5	dBA	3203	7	dBA	4958	-1	dBA	13456	-21	dBA
DewateringPump_01_bp	Dewatering Pump--DeWPump	4501	-6	dBA	1706	17	dBA	6773	-7	dBA	12639	-20	dBA
DewateringPump_02_bp	Dewatering Pump--DeWPump	6016	-4	dBA	3555	5	dBA	4648	1	dBA	12915	-20	dBA
Loader_L1350_q	Quarry Source - Production Loader--L-1350 (23m3)	5317	20	dBA	2524	29	dBA	5713	19	dBA	12879	6	dBA
Loader_CAT966_bp	Borrow Source - Loader (FEL)--CAT 966	MS	-11	dBA	MS	2	dBA	MS	-18	dBA	MS	-28	dBA
MechanicsTruck_q	Mechanics Truck--Mtruck	MS	-17	dBA	MS	-12	dBA	MS	-13	dBA	MS	-31	dBA
PrimaryDrill_D65_01_q	Primary Drill--140mm SmartRoc D65	6025	22	dBA	2986	30	dBA	5172	24	dBA	13349	11	dBA
PrimaryDrill_D65_02_q	Primary Drill--140mm SmartRoc D65	6192	21	dBA	3125	30	dBA	5035	24	dBA	13451	11	dBA
PickUp_F150_q	Pick-up--F150	MS	-3	dBA	MS	-8	dBA	MS	-9	dBA	MS	-23	dBA
PickUp_F150_q	Pick-up--F150	MS	-10	dBA	MS	-9	dBA	MS	-9	dBA	MS	-19	dBA
QuarryDieselGenSet_500kW_constr	DieselGen_500kW_Case--	5463	-3	dBA	2397	7	dBA	5787	-5	dBA	13110	-17	dBA
RockCrusher_UD211_01_q	Rock Crusher--Sandvik UD211	6220	22	dBA	3069	30	dBA	5097	25	dBA	13526	12	dBA
RockCrusher_UD211_02_q	Rock Crusher--Sandvik UD211	5407	24	dBA	2602	32	dBA	5619	23	dBA	12921	13	dBA
ScreeningPlant_bp	Borrow Source - Screening Plant--	4575	19	dBA	1539	31	dBA	6876	15	dBA	12787	6	dBA
ScreeningPlant_bp	Borrow Source - Screening Plant--	6211	16	dBA	3054	24	dBA	5112	18	dBA	13526	6	dBA
BusPersonnel_Two_UG	Bus (60 seats)--BusPersonnel	MS	-2	dBA	MS	-11	dBA	MS	-14	dBA	MS	-22	dBA
VentilationFan_LP_HL_FAR1	VF_LP_HL_FAR1--LP Fresh Air Raise	5632	23	dBA	7289	18	dBA	5761	22	dBA	8489	15	dBA
VentilationFan_LP_HL_FAR1	VF_LP_HL_FAR1--LP Fresh Air Raise	5631	23	dBA	7289	18	dBA	5761	22	dBA	8489	15	dBA
VentilationFan_LP_RAR2	VF_LP_RAR2--LP Return Air Raise	5743	7	dBA	8129	1	dBA	6790	4	dBA	7355	3	dBA
VentilationFan_LP_RAR2	VF_LP_RAR2--LP Return Air Raise	5743	7	dBA	8129	1	dBA	6790	4	dBA	7355	3	dBA
R11 TMF PondDam to Overburden#3	Articulating Truck--40t	MS	-3	dBA	MS	0	dBA	MS	-1	dBA	MS	-16	dBA
R12 Quarry1 to Overburden#6	Articulating Truck--40t	MS	-16	dBA	MS	-7	dBA	MS	-13	dBA	MS	-30	dBA
R13 Quarry2 to Overburden#6	Articulating Truck--40t	MS	-5	dBA	MS	3	dBA	MS	-5	dBA	MS	-19	dBA
R14 BorrowSource#3 to Overburden#5	Articulating Truck--40t	MS	-9	dBA	MS	7	dBA	MS	-16	dBA	MS	-27	dBA
R15 BorrowSource#3BS3B to Overburden#5	Articulating Truck--40t	MS	-11	dBA	MS	-1	dBA	MS	-18	dBA	MS	-29	dBA
R16 CWP#1 Dam to Overburden#1	Articulating Truck--40t	MS	-7	dBA	MS	-13	dBA	MS	-13	dBA	MS	-17	dBA
R28 TailingPipeline to Overburden#3	Articulating Truck--40t	MS	1	dBA	MS	9	dBA	MS	-4	dBA	MS	-14	dBA
R39 PAG Stockpile to Overburden#2	Articulating Truck--40t	MS	4	dBA	MS	-2	dBA	MS	-4	dBA	MS	-8	dBA
R7 AEXPortal to AEX-NPAG	Articulating Truck--40t	MS	-4	dBA	MS	-9	dBA	MS	-9	dBA	MS	-14	dBA
R8 AEXPortal to AEX -PAG	Articulating Truck--40t	MS	2	dBA	MS	-2	dBA	MS	-2	dBA	MS	-8	dBA
R9 SouthDam to Overburden#3	Articulating Truck--40t	MS	3	dBA	MS	6	dBA	MS	0	dBA	MS	-11	dBA
R17 BorrowSource#3 to NorthDam	Haul Truck--CAT 777F	MS	11	dBA	MS	25	dBA	MS	6	dBA	MS	-4	dBA
R18 Quarry2 - Q1 to NorthDam	Haul Truck--CAT 777F	MS	11	dBA	MS	22	dBA	MS	9	dBA	MS	-2	dBA
R19 BorrowSource#3 to SouthDam	Haul Truck--CAT 777F	MS	16	dBA	MS	27	dBA	MS	11	dBA	MS	2	dBA
R2 ViggoPit to NPAG Stockpile	Haul Truck--CAT 777F	MS	30	dBA	MS	25	dBA	MS	25	dBA	MS	24	dBA
R21 BorrowSource#3 to TMF PondDam	Haul Truck--CAT 777F	MS	25	dBA	MS	31	dBA	MS	28	dBA	MS	13	dBA
R20 Quarry1 to SouthDam	Haul Truck--CAT 777F	MS	20	dBA	MS	30	dBA	MS	20	dBA	MS	8	dBA
R22 Quarry1 to TMF PondDam	Haul Truck--CAT 777F	MS	19	dBA	MS	25	dBA	MS	23	dBA	MS	8	dBA
R23 Overburden#1 to CWP#1 Dam	Haul Truck--CAT 777F	MS	10	dBA	MS	5	dBA	MS	6	dBA	MS	2	dBA
R24 NPAG to CWP#1 Dam	Haul Truck--CAT 777F	MS	18	dBA	MS	13	dBA	MS	13	dBA	MS	9	dBA
R25 DiversionChan#2 to PAG Stockpile	Haul Truck--CAT 777F	MS	9	dBA	MS	3	dBA	MS	3	dBA	MS	2	dBA
R26 Overburden#1 to DiversionChan#2	Haul Truck--CAT 777F	MS	13	dBA	MS	6	dBA	MS	7	dBA	MS	6	dBA
R27 NPAG Stockpile to DiversionChan#2	Haul Truck--CAT 777F	MS	18	dBA	MS	12	dBA	MS	12	dBA	MS	10	dBA
R29 BorrowSource#1 to TailingsPipeline	Haul Truck--CAT 777F	MS	18	dBA	MS	23	dBA	MS	15	dBA	MS	5	dBA
R30 NPAG Stockpile to TailingsPipeline	Haul Truck--CAT 777F	MS	16	dBA	MS	13	dBA	MS	11	dBA	MS	5	dBA
R31 BorrowSource#1 to PrimaryCrusher	Haul Truck--CAT 777F	MS	15	dBA	MS	15	dBA	MS	16	dBA	MS	6	dBA
R32 NPAG Stockpile to PrimaryCrusher	Haul Truck--CAT 777F	MS	19	dBA	MS	14	dBA	MS	14	dBA	MS	8	dBA
R33 Overburden#2 to DixieCreekBerm	Haul Truck--CAT 777F	MS	16	dBA	MS	12	dBA	MS	13	dBA	MS	7	dBA

Point of Reception Description: Residence/Cabin/Lodge/Camp
Point of reception coordinates

	X	Y	Z [2]
POR1	456965	5639223	372
POR4	451915	5639044	357
POR5	451671	5630891	354
POR6	465139	5634939	350

Notes on Table:
1. dBA = 1-hour energy equivalent sound (Leq (1-hr))
2. Height above local grade 3. MS = Mobile Source

Table A-1a: Construction Phase - Noise Source Summary

Daytime - LAeq,1hr

Project: Great Bear Project
Location: Red Lake, ON

Source ID	Source Description	Residence/Cabin/Lodge/Camp POR1 POR1 POR1 Point of Reception ID: POR1			Residence/Cabin/Lodge/Camp POR4 POR4 POR4 Point of Reception ID: POR4			Residence/Cabin/Lodge/Camp POR5 POR5 POR5 Point of Reception ID: POR5			Residence/Cabin/Lodge/Camp POR6 POR6 POR6 Point of Reception ID: POR6		
		Point of Reception Description: Residence/Cabin/Lodge/Camp			Point of Reception Description: Residence/Cabin/Lodge/Camp			Point of Reception Description: Residence/Cabin/Lodge/Camp			Point of Reception Description: Residence/Cabin/Lodge/Camp		
		Point of reception coordinates			Point of reception coordinates			Point of reception coordinates			Point of reception coordinates		
		X	Y	Z [2]	X	Y	Z [2]	X	Y	Z [2]	X	Y	Z [2]
		456965	5639223	372	451915	5639044	357	451671	5630891	354	465139	5634939	350
		Point of Reception 1			Point of Reception 4			Point of Reception 5			Point of Reception 6		
		Distance [3] (m)	Sound Level at PoR	Units [1] (dBA)	Distance [3] (m)	Sound Level at PoR	Units [1] (dBA)	Distance [3] (m)	Sound Level at PoR	Units [1] (dBA)	Distance [3] (m)	Sound Level at PoR	Units [1] (dBA)
R35 HaulRoads to Overburden#2	Haul Truck--CAT 777F	MS	23	dBA	MS	18	dBA	MS	16	dBA	MS	9	dBA
R36 BorrowSource#1 to HaulRoads	Haul Truck--CAT 777F	MS	16	dBA	MS	15	dBA	MS	14	dBA	MS	5	dBA
R3 ViggoPit to LGO Stockpile - small	Haul Truck--CAT 785	MS	18	dBA	MS	13	dBA	MS	14	dBA	MS	12	dBA
R37 NPAG Stockpile to ROM Stockpile	Haul Truck--CAT 785	MS	11	dBA	MS	7	dBA	MS	8	dBA	MS	2	dBA
R38 BorrowSource#1 to InfrastructurePad	Haul Truck--CAT 785	MS	7	dBA	MS	5	dBA	MS	4	dBA	MS	-5	dBA
R4 ViggoPit to LGO Stockpile - big	Haul Truck--CAT 785	MS	17	dBA	MS	12	dBA	MS	13	dBA	MS	10	dBA
R40 AEX_PAG to PAG	Haul Truck--CAT 785	MS	21	dBA	MS	15	dBA	MS	14	dBA	MS	10	dBA
R41 AEX_NPAG to NPAG	Haul Truck--CAT 785	MS	14	dBA	MS	9	dBA	MS	7	dBA	MS	3	dBA
R5 ViggoPit to ROM Stockpile	Haul Truck--CAT 785	MS	13	dBA	MS	10	dBA	MS	12	dBA	MS	7	dBA
R6 AEXPortal to ROM Stockpile	Haul Truck--CAT 785	MS	10	dBA	MS	10	dBA	MS	12	dBA	MS	1	dBA
HVAC_Admin_in	HVAC_inlet--	5009	-8	dBA	5503	-10	dBA	5039	-8	dBA	10030	-20	dBA
HVAC_Admin_out	HVAC_outlet--	5009	-10	dBA	5506	-12	dBA	5040	-10	dBA	10027	-23	dBA
HVAC_CAMP_A_in	HVAC_inlet--	5065	-8	dBA	5502	-9	dBA	4973	-8	dBA	10087	-20	dBA
HVAC_CAMP_A_out	HVAC_outlet--	5068	-10	dBA	5503	-12	dBA	4971	-10	dBA	10089	-23	dBA
HVAC_CAMP_B_in	HVAC_inlet--	5067	-8	dBA	5519	-9	dBA	4978	-8	dBA	10071	-20	dBA
HVAC_CAMP_B_out	HVAC_outlet--	5069	-10	dBA	5520	-12	dBA	4976	-10	dBA	10071	-23	dBA
HVAC_CAMP_C_in	HVAC_inlet--	5067	-8	dBA	5533	-10	dBA	4984	-8	dBA	10055	-20	dBA
HVAC_CAMP_C_out	HVAC_outlet--	5070	-10	dBA	5535	-12	dBA	4982	-10	dBA	10056	-23	dBA
HVAC_Kitchen_in	HVAC_inlet--	5046	-8	dBA	5541	-10	dBA	5013	-8	dBA	10026	-20	dBA
HVAC_Kitchen_out	HVAC_outlet--	5046	-10	dBA	5544	-12	dBA	5014	-10	dBA	10023	-23	dBA
HVAC_Storage_in	HVAC_inlet--	4924	-8	dBA	5499	-10	dBA	5136	-8	dBA	9951	-20	dBA
HVAC_Storage_out	HVAC_outlet--	4924	-10	dBA	5502	-12	dBA	5138	-11	dBA	9948	-23	dBA
HVAC_TreatPlant_in	HVAC_inlet--	4996	-8	dBA	5620	-10	dBA	5108	-8	dBA	9890	-20	dBA
HVAC_TREATPlant_out	HVAC_outlet--	4997	-10	dBA	5623	-12	dBA	5109	-10	dBA	9886	-23	dBA
HVAC_Truck_S_in	HVAC_inlet--	4930	-8	dBA	5568	-10	dBA	5161	-8	dBA	9881	-19	dBA
VentilationFan_AEX	VentFan_aex--UG AEX Portal Ventilation Fan	4937	18	dBA	5785	22	dBA	5270	24	dBA	9644	12	dBA

Notes on Table:
1. dBA = 1-hour energy equivalent sound (Leq (1-hr))
2. Height above local grade 3. MS = Mobile Source

Table A-1b: Construction Phase - Point of Reception Noise Impact

Evening/Nighttime - LAeq,1hr

Project: Great Bear Project
Location: Red Lake, ON

	Residence/Cabin/Lodge/Camp	Residence/Cabin/Lodge/Camp	Residence/Cabin/Lodge/Camp	Residence/Cabin/Lodge/Camp
	POR1 POR1 POR1	POR4 POR4 POR4	POR5 POR5 POR5	POR6 POR6 POR6
Point of Reception ID	**POR1**	**POR4**	**POR5**	**POR6**
Point of Reception Description				
Residence/Cabin/Lodge/Camp				
Point of reception coordinates				
X	456965	451915	451671	465139
Y	5639223	5639044	5630891	5634939
Z [2]	372	357	354	350

Source ID	Source Description	Point of Reception 1			Point of Reception 4			Point of Reception 5			Point of Reception 6		
		Distance [3] (m)	Sound Level at PoR	Units [1] (dBA)	Distance [3] (m)	Sound Level at PoR	Units [1] (dBA)	Distance [3] (m)	Sound Level at PoR	Units [1] (dBA)	Distance [3] (m)	Sound Level at PoR	Units [1] (dBA)
DieselGenSet100kW_exhaust_Service_Adminstration_Area	DieselGen_100kW_Ex--Diesel GenSet Exhaust	4355	0	dBA	4875	0	dBA	5565	0	dBA	10095	0	dBA
DieselGenSet100kW_exhaust_Service_Adminstration_Area	DieselGen_100kW_Ex--Diesel GenSet Exhaust	4358	0	dBA	4914	0	dBA	5570	0	dBA	10059	0	dBA
DieselGenset 100 kW exhaust - Permanent Camp Area	DieselGen_100kW_Ex--Diesel GenSet Exhaust	1862	0	dBA	5558	0	dBA	8536	0	dBA	8289	0	dBA
DieselGenset 100 kW exhaust - Permanent Camp Area	DieselGen_100kW_Ex--Diesel GenSet Exhaust	1951	0	dBA	5584	0	dBA	8466	0	dBA	8264	0	dBA
DieselGenset 100 kW exhaust - Permanent Camp Area	DieselGen_100kW_Ex--Diesel GenSet Exhaust	2007	0	dBA	5604	0	dBA	8425	0	dBA	8247	0	dBA
Mill_misc_DieselGenSet_100kW_ex_2	DieselGen_100kW_Ex--Diesel GenSet Exhaust	4528	0	dBA	5002	0	dBA	5408	0	dBA	10112	0	dBA
Mill_misc_DieselGenSet_100kW_ex_3	DieselGen_100kW_Ex--Diesel GenSet Exhaust	4528	0	dBA	5002	0	dBA	5408	0	dBA	10112	0	dBA
Mill_misc_DieselGenSet_100kW_ex_4	DieselGen_100kW_Ex--Diesel GenSet Exhaust	4529	0	dBA	5002	0	dBA	5408	0	dBA	10113	0	dBA
Mill_misc_DieselGenSet_100kW_ex_5	DieselGen_100kW_Ex--Diesel GenSet Exhaust	4529	0	dBA	5002	0	dBA	5408	0	dBA	10113	0	dBA
DieselGenSet_500kW_exhaust - AEX Portal	DieselGen_500kW_Ex--	4907	-4	dBA	5454	-8	dBA	5137	-4	dBA	9983	-18	dBA
DieselGenSet_500kW_exhaust - AEX Portal	DieselGen_500kW_Ex--	4915	-4	dBA	5456	-7	dBA	5128	-4	dBA	9989	-18	dBA
DieselGenSet_500kW_exhaust - AEX Portal	DieselGen_500kW_Ex--	4922	-4	dBA	5459	-7	dBA	5122	-4	dBA	9992	-18	dBA
DieselGenSet_500kW_exhaust - AEX Portal	DieselGen_500kW_Ex--	4900	-4	dBA	5452	-8	dBA	5144	-4	dBA	9978	-18	dBA
DieselGenset 500 kW exhaust - Quarry Source	DieselGen_500kW_Ex--	5464	0	dBA	2401	0	dBA	5783	0	dBA	13110	0	dBA
DieselGenset 100 kW exhaust - Hwy 105 and Main Access R	DieselGen_100kW_Ex--Diesel GenSet Exhaust	1170	0	dBA	5517	0	dBA	9196	0	dBA	8410	0	dBA
DieselGenset_100 kW_exhaust - TMF Dam	DieselGen_100kW_Ex--Diesel GenSet Exhaust	4564	0	dBA	3666	0	dBA	5464	0	dBA	11359	0	dBA
DieselGenSet_50 kW casing - Chakuni River	DieselGen_50kW_Case--Diesel GenSet Casing	8721	0	dBA	12993	0	dBA	12491	0	dBA	1734	0	dBA
DieselGenSet_50kW exhaust - Chakuni River	DieselGen_50kW_Ex--Diesel GenSet Exhaust	8714	0	dBA	12985	0	dBA	12483	0	dBA	1740	0	dBA
DieselGenSet_200 kW casing - Chakuni River	DieselGen_200kW_Case--Diesel GenSet Casing	9644	0	dBA	14042	0	dBA	13587	0	dBA	1154	0	dBA
DieselGenSet_200 kW exhaust - Chakuni River	DieselGen_200kW_Ex--Diesel GenSet Exhaust	9634	0	dBA	14030	0	dBA	13575	0	dBA	1156	0	dBA
R1 ViggoPit to PAG Stockpile	Haul Truck--CAT 777F	MS	35	dBA	MS	29	dBA	MS	29	dBA	MS	28	dBA
R34 NPAG Stockpile to HaulRoads	Haul Truck--CAT 777F	MS	0	dBA	MS	0	dBA	MS	0	dBA	MS	0	dBA
R2B LP Central to Overburden#1	Haul Truck--CAT 785	MS	32	dBA	MS	26	dBA	MS	27	dBA	MS	25	dBA
BlastLoaderCAT262_01_pp	Blasting Loader--CAT 262	6112	0	dBA	8850	0	dBA	7453	0	dBA	6629	0	dBA
BlastLoadeCAT262_02_pp	Blasting Loader--CAT 262	5280	0	dBA	7465	0	dBA	6485	0	dBA	7822	0	dBA
BlastTruck_F350_01_pp	Blasters Truck--F350	MS	0	dBA	MS	0	dBA	MS	0	dBA	MS	0	dBA
BlasterTruck_02_pp	Blasters Truck--F350	MS	0	dBA	MS	0	dBA	MS	0	dBA	MS	0	dBA
PersonnelBus_01_pp	Bus (60 seats)--BusPersonnel	MS	0	dBA	MS	0	dBA	MS	0	dBA	MS	0	dBA
BusPersonnel_02_pp	Blasters Truck--F350	MS	0	dBA	MS	0	dBA	MS	0	dBA	MS	0	dBA
BusPersonnel_03_pp	Bus (60 seats)--BusPersonnel	MS	0	dBA	MS	0	dBA	MS	0	dBA	MS	0	dBA
BusPersonnel_04_pp	Bus (60 seats)--BusPersonnel	MS	0	dBA	MS	0	dBA	MS	0	dBA	MS	0	dBA
ContainerTrailerTruck_pp	Container Trailer Truck--ContTT	MS	0	dBA	MS	0	dBA	MS	0	dBA	MS	0	dBA
ProductionCrush_QJ341	Crusher--Sandvik QJ341	5085	0	dBA	5273	0	dBA	4868	0	dBA	10351	0	dBA
Dozer_CAT_D10_02_pp	Dozer - D10--CAT D10	4328	0	dBA	5472	0	dBA	5813	0	dBA	9448	0	dBA
Dozer_CAT_D10_pp	Dozer - D10--CAT D10	4152	0	dBA	5766	0	dBA	6192	0	dBA	8976	0	dBA
Dozer_CAT_D10_pp	Dozer - D10--CAT D10	3494	0	dBA	6113	0	dBA	7239	0	dBA	8126	0	dBA
Dozer_CAT_D6_01_pp	Dozer - D6--CAT D6	4265	0	dBA	7186	0	dBA	7492	0	dBA	7245	0	dBA
DewateringPump_01_pp	Dewatering Pump--DeWPump	4777	0	dBA	6294	0	dBA	5843	0	dBA	8883	0	dBA
DewateringPump_02_pp	Dewatering Pump--DeWPump	5720	0	dBA	7869	0	dBA	6427	0	dBA	7738	0	dBA
DewateringPump_03_pp	Dewatering Pump--DeWPump	4693	0	dBA	6309	0	dBA	5961	0	dBA	8785	0	dBA
DewateringPump_04_pp	Dewatering Pump--DeWPump	4967	0	dBA	7865	0	dBA	7507	0	dBA	6869	0	dBA
DewateringPump_05_pp	Dewatering Pump--DeWPump	5690	0	dBA	7798	0	dBA	6365	0	dBA	7811	0	dBA
DewateringPump_06_pp	Dewatering Pump--DeWPump	6094	0	dBA	8848	0	dBA	7477	0	dBA	6607	0	dBA
DewateringPump_07_pp	Dewatering Pump--DeWPump	5378	0	dBA	7356	0	dBA	6201	0	dBA	8092	0	dBA
DewateringPump_08_pp	Dewatering Pump--DeWPump	4676	0	dBA	6843	0	dBA	6524	0	dBA	8075	0	dBA
DewateringPump_09_pp	Dewatering Pump--DeWPump	5938	0	dBA	8389	0	dBA	6920	0	dBA	7186	0	dBA
DewateringPump_10_pp	Dewatering Pump--DeWPump	6054	0	dBA	8901	0	dBA	7635	0	dBA	6452	0	dBA
DieselPump_01_pp	Diesel Pump--HL250M	5287	0	dBA	7443	0	dBA	6446	0	dBA	7861	0	dBA
DieselPump_02_pp	Diesel Pump--HL250M	5297	0	dBA	7133	0	dBA	6033	0	dBA	8317	0	dBA
DieselPump_03_pp	Diesel Pump--HL250M	6082	0	dBA	8886	0	dBA	7565	0	dBA	6519	0	dBA
DieselPump_04_pp	Diesel Pump--HL250M	5472	0	dBA	7832	0	dBA	6730	0	dBA	7489	0	dBA
DieselPump_05_pp	Diesel Pump--HL250M	6127	0	dBA	8860	0	dBA	7448	0	dBA	6633	0	dBA
Excavator_CAT374_01_pp	Excavator--CAT 374	4637	0	dBA	6583	0	dBA	6294	0	dBA	8384	0	dBA
Excavator_CAT374_02_pp	Excavator--CAT 374	5666	0	dBA	7819	0	dBA	6431	0	dBA	7748	0	dBA
Excavator_CAT374_03_pp	Excavator--CAT 374	6131	0	dBA	8895	0	dBA	7504	0	dBA	6576	0	dBA
FrontLoaderSmallerCAT966_01_pp	Front End Loader (smaller)--CAT 966	5275	0	dBA	7231	0	dBA	6185	0	dBA	8153	0	dBA
FrontLoaderSmallerCAT966_02_pp	Front End Loader (smaller)--CAT 966	5478	0	dBA	7565	0	dBA	6339	0	dBA	7904	0	dBA

Notes on Table:
1. dBA = 1-hour energy equivalent sound (Leq (1-hr))
2. Height above local grade 3. MS = Mobile Source

Table A-1b: Construction Phase - Point of Reception Noise Impact

Evening/Nighttime - LAeq,1hr

Project: Great Bear Project
Location: Red Lake, ON

		Residence/Cabin/Lodge/Camp POR1 POR1 POR1	Residence/Cabin/Lodge/Camp POR4 POR4 POR4	Residence/Cabin/Lodge/Camp POR5 POR5 POR5	Residence/Cabin/Lodge/Camp POR6 POR6 POR6
		Point of Reception ID	**Point of Reception ID**	**Point of Reception ID**	**Point of Reception ID**
		POR1	**POR4**	**POR5**	**POR6**
		Point of Reception Description	**Point of Reception Description**	**Point of Reception Description**	**Point of Reception Description**
		Residence/Cabin/Lodge/Camp	**Residence/Cabin/Lodge/Camp**	**Residence/Cabin/Lodge/Camp**	**Residence/Cabin/Lodge/Camp**
		Point of reception coordinates	**Point of reception coordinates**	**Point of reception coordinates**	**Point of reception coordinates**
		X **Y** **Z [2]**	**X** **Y** **Z [2]**	**X** **Y** **Z [2]**	**X** **Y** **Z [2]**
		456965 5639223 372	451915 5639044 357	451671 5630891 354	465139 5634939 350

Source ID	Source Description	Point of Reception 1			Point of Reception 4			Point of Reception 5			Point of Reception 6		
		Distance [3] (m)	Sound Level at PoR	Units [1] (dBA)	Distance [3] (m)	Sound Level at PoR	Units [1] (dBA)	Distance [3] (m)	Sound Level at PoR	Units [1] (dBA)	Distance [3] (m)	Sound Level at PoR	Units [1] (dBA)
FrontLoaderSmallerCAT966_03_pp	Front End Loader (smaller)--CAT 966	6110	0	dBA	8876	0	dBA	7504	0	dBA	6579	0	dBA
FrontLoaderSmallerCAT966_04_pp	Front End Loader (smaller)--CAT 966	6087	0	dBA	8825	0	dBA	7448	0	dBA	6637	0	dBA
FlatDeckTruck_pp	Flat Deck Truck--FlatDT	MS	0	dBA	MS	0	dBA	MS	0	dBA	MS	0	dBA
FrontLoaderCAT993_01_pp	Front End Loader--CAT993	6150	0	dBA	8905	0	dBA	7494	0	dBA	6585	0	dBA
FrontLoaderCAT993_02_pp	Front End Loader--CAT993	5165	0	dBA	7441	0	dBA	6610	0	dBA	7727	0	dBA
Fork_CATDP4055_01_pp	Forklift--Cat DP40-55(C)N3, 5.5t	4321	0	dBA	4939	0	dBA	5617	0	dBA	10003	0	dBA
Fork_CATDP4055_02_pp	Forklift--Cat DP40-55(C)N3, 5.5t	4232	0	dBA	4786	0	dBA	5677	0	dBA	10087	0	dBA
Fork_CATDP4055_03_pp	Forklift--Cat DP40-55(C)N3, 5.5t	4479	0	dBA	4941	0	dBA	5446	0	dBA	10132	0	dBA
FuelTankerTruck_CAT740_01_pp	Fuel Tanker Truck (30,000 L)--CAT 740	MS	0	dBA	MS	0	dBA	MS	0	dBA	MS	0	dBA
FuelTruck_CAT740_02_pp	Fuel Tanker Truck (30,000 L)--CAT 740	MS	0	dBA	MS	0	dBA	MS	0	dBA	MS	0	dBA
FusionMachine_01_pp	Fusion Machine--Ritmo Delta 250	4468	0	dBA	4960	0	dBA	5463	0	dBA	10104	0	dBA
FusionMachine_02_pp	Fusion Machine--Ritmo Delta 250	4466	0	dBA	4967	0	dBA	5467	0	dBA	10094	0	dBA
FusionMachine_03_pp	Fusion Machine--Ritmo Delta 250	4286	0	dBA	4852	0	dBA	5633	0	dBA	10063	0	dBA
GenSet_DewateringPump_Viggo_100kW_case	DieselGen_100kW_Case--Diesel GenSet Casing	5036	0	dBA	8091	0	dBA	7771	0	dBA	6580	0	dBA
DieselGenSet_DewateringPump_Viggo_100kW_ex	DieselGen_100kW_Ex--Diesel GenSet Exhaust	5036	0	dBA	8090	0	dBA	7768	0	dBA	6582	0	dBA
HighCubeTruck_pp	High Cube Truck--Ford F-650 SD DIESEL	MS	0	dBA	MS	0	dBA	MS	0	dBA	MS	0	dBA
IntregatedToolCarrier_pp	Integrated Tool Carrier--WA200-7	4708	0	dBA	5051	0	dBA	5225	0	dBA	10220	0	dBA
LowboyTracktor_75t_pp	Lowboy and Tractor--75ton - 100ton	MS	0	dBA	MS	0	dBA	MS	0	dBA	MS	0	dBA
MechanicsTruck_01_pp	Mechanics Truck--Mtruck	MS	0	dBA	MS	0	dBA	MS	0	dBA	MS	0	dBA
MechanicsTruck_02_pp	Mechanics Truck--Mtruck	MS	0	dBA	MS	0	dBA	MS	0	dBA	MS	0	dBA
MechanicsTruck_03_pp	Mechanics Truck--Mtruck	MS	0	dBA	MS	0	dBA	MS	0	dBA	MS	0	dBA
MechanicsTruck_04_pp	Mechanics Truck--Mtruck	MS	0	dBA	MS	0	dBA	MS	0	dBA	MS	0	dBA
MobileCrane150t_pp	150t Mobile Crane--MobCrane150t	4489	0	dBA	5002	0	dBA	5451	0	dBA	10079	0	dBA
MobileCrane50t_01_pp	50t Mobile Crane--Tadano GR-500XL	4492	0	dBA	4925	0	dBA	5429	0	dBA	10160	0	dBA
MobileCrane50t_02_pp	50t Mobile Crane--Tadano GR-500XL	4488	0	dBA	4990	0	dBA	5449	0	dBA	10090	0	dBA
OreControlDrill_01_pp	Ore Control Drill--Explorac E100	5070	0	dBA	7222	0	dBA	6455	0	dBA	7942	0	dBA
OreControlDrill_02_pp	Ore Control Drill--Explorac E100	6088	0	dBA	8811	0	dBA	7420	0	dBA	6664	0	dBA
OreControlDrill_03_pp	Ore Control Drill--Explorac E100	5489	0	dBA	7686	0	dBA	6495	0	dBA	7734	0	dBA
PrimaryDrill_D65_01_pp	Primary Drill--140mm SmartRoc D65	5162	0	dBA	7260	0	dBA	6378	0	dBA	7987	0	dBA
PrimaryDrill_D65_02_pp	Primary Drill--140mm SmartRoc D65	5374	0	dBA	7601	0	dBA	6541	0	dBA	7725	0	dBA
PrimaryDrill_D65_03_pp	Primary Drill--140mm SmartRoc D65	6099	0	dBA	8807	0	dBA	7396	0	dBA	6687	0	dBA
ProductionDrill_PV235_01_pp	Production Drill--Epiroc Pit Viper PV235	5119	0	dBA	7164	0	dBA	6317	0	dBA	8078	0	dBA
ProductionDrill_PV235_02_pp	Production Drill--Epiroc Pit Viper PV235	5335	0	dBA	7519	0	dBA	6482	0	dBA	7804	0	dBA
ProductionDrill_PV235_03_pp	Production Drill--Epiroc Pit Viper PV235	6059	0	dBA	8775	0	dBA	7400	0	dBA	6688	0	dBA
PortableWaterTruck_pp	Portable Water Truck--PoWT	MS	0	dBA	MS	0	dBA	MS	0	dBA	MS	0	dBA
PickUp_F150_01_pp	Pick-up--F150	MS	0	dBA	MS	0	dBA	MS	0	dBA	MS	0	dBA
PickUp_F150_02_pp	Pick-up--F150	MS	0	dBA	MS	0	dBA	MS	0	dBA	MS	0	dBA
PickUp_F150_03_pp	Pick-up--F150	MS	0	dBA	MS	0	dBA	MS	0	dBA	MS	0	dBA
RoadGrader16blade_01_pp	Road Grader--CAT 16	MS	0	dBA	MS	0	dBA	MS	0	dBA	MS	0	dBA
RoadGrader_CAT16_02_pp	Road Grader--CAT 16	MS	0	dBA	MS	0	dBA	MS	0	dBA	MS	0	dBA
SewageCollectionTruck_pp	Sewage Collection Truck--SewColTruck	MS	0	dBA	MS	0	dBA	MS	0	dBA	MS	0	dBA
Shovel_12m3_pp	Shovel 12.0 m3--CAT 6020	5151	0	dBA	7282	0	dBA	6421	0	dBA	7943	0	dBA
Shovel_10m3_pp	Shovel 10.0 m3--CAT 6015	6077	0	dBA	8788	0	dBA	7395	0	dBA	6691	0	dBA
Shovel_16m3_pp	Shovel 16.5 m3--CAT 6030	5058	0	dBA	7069	0	dBA	6283	0	dBA	8145	0	dBA
SkidSteer_CAT650_01_pp	Skid Steer--Bobcat S650	4305	0	dBA	4737	0	dBA	5593	0	dBA	10191	0	dBA
SkidSteer_CAT650_02_pp	Skid Steer--Bobcat S650	4467	0	dBA	4950	0	dBA	5462	0	dBA	10113	0	dBA
SnowWaterTruck_01_pp	Snow Plow/Water Truck--T880	MS	0	dBA	MS	0	dBA	MS	0	dBA	MS	0	dBA
SnowWaterTruck_02_pp	Snow Plow/Water Truck--T880	MS	0	dBA	MS	0	dBA	MS	0	dBA	MS	0	dBA
TireManipulator_WA500_pp	Tire Manipulator--WA-500-7	4182	0	dBA	4724	0	dBA	5719	0	dBA	10109	0	dBA
TLB_CAT422_01_pp	TLB--Cat 422F2	5113	0	dBA	5286	0	dBA	4841	0	dBA	10365	0	dBA
TLB_CAT422_02_pp	TLB--Cat 422F2	4792	0	dBA	5126	0	dBA	5152	0	dBA	10221	0	dBA
WaterTruck_CAT740_01_pp	Water Truck (30,000 L)--CAT 740	MS	0	dBA	MS	0	dBA	MS	0	dBA	MS	0	dBA
WaterTruck_02_pp	Water Truck (30,000 L)--CAT 740	MS	0	dBA	MS	0	dBA	MS	0	dBA	MS	0	dBA
WheelLoader_CAT844_01_pp	Wheel Loader--CAT 844 RTD	5143	0	dBA	7271	0	dBA	6417	0	dBA	7951	0	dBA
WheelLoader_CAT844_02_pp	Wheel Loader--CAT 844 RTD	6137	0	dBA	8884	0	dBA	7477	0	dBA	6603	0	dBA
ArticulatedTruckCAT740_01_tf	EJ Articulated Trucks--CAT 740	MS	0	dBA	MS	0	dBA	MS	0	dBA	MS	0	dBA
ArticulatedTruckCAT740_02_tf	EJ Articulated Trucks--CAT 740	MS	0	dBA	MS	0	dBA	MS	0	dBA	MS	0	dBA
ArticulatedTruck_CAT740_03_tf	EJ Articulated Trucks--CAT 740	MS	0	dBA	MS	0	dBA	MS	0	dBA	MS	0	dBA
Compactor_CAT64B_02_tf	Compactor--CAT CS64B	4380	0	dBA	6365	0	dBA	6405	0	dBA	8436	0	dBA

Notes on Table:
1. dBA = 1-hour energy equivalent sound (Leq (1-hr))
2. Height above local grade 3. MS = Mobile Source

Table A-1b: Construction Phase - Point of Reception Noise Impact

Evening/Nighttime - LAeq,1hr

Project: Great Bear Project
Location: Red Lake, ON

Source ID	Source Description	Residence/Cabin/Lodge/Camp POR1 POR1 POR1 Point of Reception ID: POR1			Residence/Cabin/Lodge/Camp POR4 POR4 POR4 Point of Reception ID: POR4			Residence/Cabin/Lodge/Camp POR5 POR5 POR5 Point of Reception ID: POR5			Residence/Cabin/Lodge/Camp POR6 POR6 POR6 Point of Reception ID: POR6		
		Point of Reception 1			Point of Reception 4			Point of Reception 5			Point of Reception 6		
		Distance [3] (m)	Sound Level at PoR	Units [1] (dBA)	Distance [3] (m)	Sound Level at PoR	Units [1] (dBA)	Distance [3] (m)	Sound Level at PoR	Units [1] (dBA)	Distance [3] (m)	Sound Level at PoR	Units [1] (dBA)
Compactor_CAT64B_03_tf	Compactor--CAT CS64B	4772	0	dBA	4246	0	dBA	5128	0	dBA	11047	0	dBA
Compactor_CAT64B_01_tf	Compactor--CAT CS64B	4896	0	dBA	1901	0	dBA	6397	0	dBA	12854	0	dBA
Compresor_S375H_tf	Compressor--Sullair 375H	5189	0	dBA	3805	0	dBA	4915	0	dBA	11817	0	dBA
Excavator_CAT_D6_01_tf	EX Dozer--CAT D6	3411	0	dBA	3046	0	dBA	6756	0	dBA	11079	0	dBA
Excavator_CAT_D6_02_tf	EX Dozer--CAT D6	3670	0	dBA	2359	0	dBA	6939	0	dBA	11714	0	dBA
Excavator_CAT_D6_03_tf	EX Dozer--CAT D6	5931	0	dBA	3609	0	dBA	4629	0	dBA	12773	0	dBA
Excavator_CAT_D6_04_tf	EX Dozer--CAT D6	3558	0	dBA	4015	0	dBA	6324	0	dBA	10353	0	dBA
Dozer_CAT_D8_tf	Dozer--CAT D8	4867	0	dBA	3719	0	dBA	5196	0	dBA	11581	0	dBA
DewateringPump_01_tf	Dewatering Pump--DeWPump	5104	0	dBA	4293	0	dBA	4817	0	dBA	11318	0	dBA
DewateringPump_02_tf	Dewatering Pump--DeWPump	4407	0	dBA	3698	0	dBA	5589	0	dBA	11205	0	dBA
DewateringPump_03_tf	Dewatering Pump--DeWPump	4906	0	dBA	3752	0	dBA	5152	0	dBA	11590	0	dBA
DewateringPump_04_tf	Dewatering Pump--DeWPump	4548	0	dBA	6493	0	dBA	6317	0	dBA	8419	0	dBA
DewateringPump_05_tf	Dewatering Pump--DeWPump	5671	0	dBA	3913	0	dBA	4542	0	dBA	12234	0	dBA
DewateringPump_06_tf	Dewatering Pump--DeWPump	5395	0	dBA	2048	0	dBA	6122	0	dBA	13251	0	dBA
DewateringPump_07_tf	Dewatering Pump--DeWPump	4919	0	dBA	1868	0	dBA	6415	0	dBA	12893	0	dBA
DewateringPump_08_tf	Dewatering Pump--DeWPump	4841	0	dBA	4800	0	dBA	5040	0	dBA	10593	0	dBA
DewateringPump_09_tf	Dewatering Pump--DeWPump	5462	0	dBA	3874	0	dBA	4692	0	dBA	12041	0	dBA
DewateringPump_10_tf	Dewatering Pump--DeWPump	4554	0	dBA	1804	0	dBA	6657	0	dBA	12624	0	dBA
DumperTruck_CAT735B_01_tf	Dump Truck --CAT 735B	MS	0	dBA	MS	0	dBA	MS	0	dBA	MS	0	dBA
DumpTruck_CAT735_02_tf	Dump Truck --CAT 735B	MS	0	dBA	MS	0	dBA	MS	0	dBA	MS	0	dBA
DumpTruck_CAT735_03_tf	Dump Truck --CAT 735B	MS	0	dBA	MS	0	dBA	MS	0	dBA	MS	0	dBA
Exca_CAT336_01_tf	Excavator--CAT 336	4335	0	dBA	3693	0	dBA	5653	0	dBA	11153	0	dBA
Exca_CAT336_02_tf	Excavator--CAT 336	4732	0	dBA	3728	0	dBA	5302	0	dBA	11452	0	dBA
Exca_CAT336_03_tf	Excavator--CAT 336	4365	0	dBA	6324	0	dBA	6384	0	dBA	8475	0	dBA
Exca_CAT336_04_tf	Excavator--CAT 336	5324	0	dBA	3838	0	dBA	4803	0	dBA	11926	0	dBA
Exca_CAT336_05_tf	Excavator--CAT 336	4624	0	dBA	1846	0	dBA	6579	0	dBA	12655	0	dBA
Exca_CAT336_06_tf	Excavator--CAT 336	5095	0	dBA	1920	0	dBA	6306	0	dBA	13026	0	dBA
FlatBedBoomTruck_tf	Flat Bed or Boom Truck --	MS	0	dBA	MS	0	dBA	MS	0	dBA	MS	0	dBA
GroutPlant_CG630_tf	Grout Plant--CG630E	4636	0	dBA	3715	0	dBA	5387	0	dBA	11379	0	dBA
Loader_CAT950_tf	Loader--CAT950	4554	0	dBA	3710	0	dBA	5457	0	dBA	11315	0	dBA
PickUp_F150_tf	Pick-up--F150	MS	0	dBA	MS	0	dBA	MS	0	dBA	MS	0	dBA
Skidder_JD640_01_tf	Skidder--JD 640L	5052	0	dBA	3779	0	dBA	5028	0	dBA	11704	0	dBA
Skidder_JD640_02_tf	Skidder--JD 640L	4477	0	dBA	3707	0	dBA	5524	0	dBA	11254	0	dBA
TMF_DamDieselGen_100kW_case	DieselGen_100kW_Case--Diesel GenSet Casing	4562	0	dBA	3666	0	dBA	5467	0	dBA	11357	0	dBA
Admin_misc_DieselGen_100kW_case	DieselGen_100kW_Case--Diesel GenSet Casing	4356	0	dBA	4875	0	dBA	5564	0	dBA	10096	0	dBA
Admin_misc_DieselGen_100kW_case	DieselGen_100kW_Case--Diesel GenSet Casing	4359	0	dBA	4914	0	dBA	5569	0	dBA	10060	0	dBA
BackHow_CAT330_mi	Backhoe--330	1888	0	dBA	5543	0	dBA	8497	0	dBA	8304	0	dBA
BorrowForklift_4t_01_mi	FORKLIFT--Genie 4 ton Ext boom	1890	0	dBA	5563	0	dBA	8512	0	dBA	8284	0	dBA
BorrowForklift_4t_02_mi	FORKLIFT--Genie 4 ton Ext boom	1942	0	dBA	5546	0	dBA	8444	0	dBA	8303	0	dBA
BorrowForklift_4t_03_mi	FORKLIFT--Genie 4 ton Ext boom	1995	0	dBA	5564	0	dBA	8405	0	dBA	8287	0	dBA
BorrowForklift_4t_04_mi	FORKLIFT--Genie 4 ton Ext boom	4191	0	dBA	4837	0	dBA	5732	0	dBA	10003	0	dBA
BorrowForklift_4t_05_mi	FORKLIFT--Genie 4 ton Ext boom	4275	0	dBA	4773	0	dBA	5629	0	dBA	10134	0	dBA
BorrowForklift_4t_06_mi	FORKLIFT--Genie 4 ton Ext boom	4365	0	dBA	5017	0	dBA	5589	0	dBA	9961	0	dBA
Compactor_CAT433_01_mi	Compactor Vib--CAT 433	2629	0	dBA	5659	0	dBA	7817	0	dBA	8290	0	dBA
Compactor_CAT433_02_mi	Compactor Vib--CAT 433	4234	0	dBA	4828	0	dBA	5684	0	dBA	10047	0	dBA
Compactor_CAT433_03_mi	Compactor Vib--CAT 433	4339	0	dBA	4889	0	dBA	5585	0	dBA	10069	0	dBA
Compactor_CAT434_04_mi	Compactor Vib--CAT CB434	4323	0	dBA	4726	0	dBA	5572	0	dBA	10217	0	dBA
Compresor_S375H_01_mi	Compressor--Sullair 375H	4235	0	dBA	4992	0	dBA	5724	0	dBA	9881	0	dBA
Compresor_S375H_02_mi	Compressor--Sullair 375H	4248	0	dBA	4952	0	dBA	5698	0	dBA	9932	0	dBA
Compresor_S375H_03_mi	Compressor--Sullair 375H	4232	0	dBA	4747	0	dBA	5670	0	dBA	10125	0	dBA
Compresor_S375H_04_mi	Compressor--Sullair 375H	4302	0	dBA	4969	0	dBA	5645	0	dBA	9958	0	dBA
Compresor_S375H_05_mi	Compressor--Sullair 375H	2598	0	dBA	5649	0	dBA	7842	0	dBA	8292	0	dBA
Compresor_S375H_06_mi	Compressor--Sullair 375H	2578	0	dBA	5680	0	dBA	7889	0	dBA	8253	0	dBA
CraneCrawler_50t_01_mi	Crane Crawler--50t	4317	0	dBA	4799	0	dBA	5590	0	dBA	10140	0	dBA
CraneCrawler_50t_02_mi	Crane Crawler--50t	4326	0	dBA	4865	0	dBA	5593	0	dBA	10082	0	dBA
CraneCrawler_50t_03_mi	Crane Crawler--50t	4258	0	dBA	4826	0	dBA	5658	0	dBA	10067	0	dBA
CraneHydraulic_31t_mi	Crane Hydraulic--31t	4193	0	dBA	4698	0	dBA	5704	0	dBA	10143	0	dBA
CraneRemoteTerrain_80t_01_mi	RT Crane 80T--	2602	0	dBA	5684	0	dBA	7866	0	dBA	8255	0	dBA
CraneRemoteTerrain_80t_02_mi	RT Crane 80T--	4270	0	dBA	5062	0	dBA	5707	0	dBA	9837	0	dBA

	Point of Reception Description		
	Residence/Cabin/Lodge/Camp		
	Point of reception coordinates		
	X	Y	Z [2]
POR1	456965	5639223	372
POR4	451915	5639044	357
POR5	451671	5630891	354
POR6	465139	5634939	350

Notes on Table:
1. dBA = 1-hour energy equivalent sound (Leq (1-hr))
2. Height above local grade 3. MS = Mobile Source

Table A-1b: Construction Phase - Point of Reception Noise Impact

Evening/Nighttime - LAeq,1hr

Project: Great Bear Project
Location: Red Lake, ON

		Residence/Cabin/Lodge/Camp POR1 POR1 POR1	Residence/Cabin/Lodge/Camp POR4 POR4 POR4	Residence/Cabin/Lodge/Camp POR5 POR5 POR5	Residence/Cabin/Lodge/Camp POR6 POR6 POR6
		Point of Reception ID POR1	**Point of Reception ID** POR4	**Point of Reception ID** POR5	**Point of Reception ID** POR6
		Point of Reception Description	**Point of Reception Description**	**Point of Reception Description**	**Point of Reception Description**
		Residence/Cabin/Lodge/Camp	**Residence/Cabin/Lodge/Camp**	**Residence/Cabin/Lodge/Camp**	**Residence/Cabin/Lodge/Camp**
		Point of reception coordinates	**Point of reception coordinates**	**Point of reception coordinates**	**Point of reception coordinates**
		X 456965 **Y** 5639223 **Z [2]** 372	**X** 451915 **Y** 5639044 **Z [2]** 357	**X** 451671 **Y** 5630891 **Z [2]** 354	**X** 465139 **Y** 5634939 **Z [2]** 350

Source ID	Source Description	Point of Reception 1 Distance [3] (m)	Sound Level at PoR	Units [1] (dBA)	Point of Reception 4 Distance [3] (m)	Sound Level at PoR	Units [1] (dBA)	Point of Reception 5 Distance [3] (m)	Sound Level at PoR	Units [1] (dBA)	Point of Reception 6 Distance [3] (m)	Sound Level at PoR	Units [1] (dBA)
DewateringPump_01_mi	Dewatering Pump--DeWPump	4348	0	dBA	4758	0	dBA	5550	0	dBA	10206	0	dBA
DewateringPump_02_mi	Dewatering Pump--DeWPump	4379	0	dBA	4986	0	dBA	5566	0	dBA	10003	0	dBA
DewateringPump_03_mi	Dewatering Pump--DeWPump	5124	0	dBA	5327	0	dBA	4840	0	dBA	10334	0	dBA
DewateringPump_04_mi	Dewatering Pump--DeWPump	4236	0	dBA	4704	0	dBA	5659	0	dBA	10171	0	dBA
DewateringPump_05_mi	Dewatering Pump--DeWPump	4201	0	dBA	4929	0	dBA	5742	0	dBA	9920	0	dBA
DewateringPump_06_mi	Dewatering Pump--DeWPump	1925	0	dBA	5471	0	dBA	8403	0	dBA	8379	0	dBA
DewateringPump_07_mi	Dewatering Pump--DeWPump	2118	0	dBA	5508	0	dBA	8235	0	dBA	8354	0	dBA
DewateringPump_08_mi	Dewatering Pump--DeWPump	2622	0	dBA	5658	0	dBA	7824	0	dBA	8289	0	dBA
DewateringPump_09_mi	Dewatering Pump--DeWPump	4378	0	dBA	5072	0	dBA	5592	0	dBA	9914	0	dBA
DewateringPump_10_mi	Dewatering Pump--DeWPump	4907	0	dBA	5988	0	dBA	5439	0	dBA	9380	0	dBA
DieselGenSet_500kW_case	DieselGen_500kW_Case--	4835	0	dBA	5529	0	dBA	5254	0	dBA	9832	0	dBA
DieselGenSet_500kW_ex	DieselGen_500kW_Ex--	4838	0	dBA	5531	0	dBA	5251	0	dBA	9834	0	dBA
DozerWinch_CATD8_mi	Dozer Winch --CAT D8	3032	0	dBA	5437	0	dBA	7231	0	dBA	8674	0	dBA
DozerWinch_CATD8_mi	Dozer Winch --CAT D8	5173	0	dBA	7321	0	dBA	6441	0	dBA	7912	0	dBA
Dozer_LGP_D4_mi	Dozer LGP--D4	4570	0	dBA	5176	0	dBA	5414	0	dBA	9969	0	dBA
DozerBladeWinch_01_mi	Dozer W/ Blade and Winch--	4288	0	dBA	5033	0	dBA	5678	0	dBA	9881	0	dBA
DozerBladeWinch_02_mi	Dozer W/ Blade and Winch--	4362	0	dBA	5016	0	dBA	5593	0	dBA	9959	0	dBA
DozerBladeWinch_03_mi	Dozer W/ Blade and Winch--	4220	0	dBA	4695	0	dBA	5675	0	dBA	10166	0	dBA
DozerBladeWinch_04_mi	Dozer W/ Blade and Winch--	3439	0	dBA	5210	0	dBA	6669	0	dBA	9119	0	dBA
DozerBladeWinch_05_mi	Dozer W/ Blade and Winch--	2628	0	dBA	5659	0	dBA	7818	0	dBA	8290	0	dBA
DumpTruck_CAT735B_01_mi	Dump Truck --CAT 735B	MS	0	dBA	MS	0	dBA	MS	0	dBA	MS	0	dBA
DumpTruck_CAT740B_02_mi	Dump Truck 40T --CAT 740B	MS	0	dBA	MS	0	dBA	MS	0	dBA	MS	0	dBA
DumpTruck_CAT740B_03_mi	Dump Truck 40T --CAT 740B	MS	0	dBA	MS	0	dBA	MS	0	dBA	MS	0	dBA
DumpTruck_CAT740B_04_mi	Dump Truck 40T --CAT 740B	MS	0	dBA	MS	0	dBA	MS	0	dBA	MS	0	dBA
Excavator_CAT330_01_mi	Excavator Hydraulic--CAT330	4887	0	dBA	7797	0	dBA	7516	0	dBA	6894	0	dBA
Excavator_CAT330_02_mi	Excavator Hydraulic--CAT330	4723	0	dBA	6320	0	dBA	5933	0	dBA	8800	0	dBA
Excavator_CAT330_03_mi	Excavator Hydraulic--CAT330	5670	0	dBA	7795	0	dBA	6391	0	dBA	7789	0	dBA
ExploMagazine_DieselGen_100kW_case	DieselGen_100kW_Case--Diesel GenSet Casing	4897	0	dBA	7815	0	dBA	7530	0	dBA	6876	0	dBA
ExploMagazineDieselGenSet_100kW_ex	DieselGen_100kW_Ex--Diesel GenSet Exhaust	4899	0	dBA	7816	0	dBA	7528	0	dBA	6877	0	dBA
ExploStorage_DieselGen_100kW_case	DieselGen_100kW_Case--Diesel GenSet Casing	5379	0	dBA	8682	0	dBA	8288	0	dBA	5961	0	dBA
ExploStorageDieselGenSet_100kW_ex	DieselGen_100kW_Ex--Diesel GenSet Exhaust	5380	0	dBA	8685	0	dBA	8290	0	dBA	5958	0	dBA
FlatBedTruck_10t_mi	Truck Flatbed--10t	1948	0	dBA	5530	0	dBA	8426	0	dBA	8319	0	dBA
FusionMachine_01_mi	Fusion Machine--Ritmo Delta 250	4217	0	dBA	4818	0	dBA	5700	0	dBA	10043	0	dBA
FusionMachine_02_mi	Fusion Machine--Ritmo Delta 250	4199	0	dBA	4890	0	dBA	5735	0	dBA	9957	0	dBA
FusionMachine_03_mi	Fusion Machine--Ritmo Delta 250	1900	0	dBA	5631	0	dBA	8558	0	dBA	8216	0	dBA
DieselGenSet_Construc_100kW_case	DieselGen_100kW_Case--Diesel GenSet Casing	2007	0	dBA	5600	0	dBA	8423	0	dBA	8250	0	dBA
DieselGenSet_Construc_100kW_case	DieselGen_100kW_Case--Diesel GenSet Casing	1951	0	dBA	5582	0	dBA	8464	0	dBA	8267	0	dBA
DieselGenSet_Construc_100kW_case	DieselGen_100kW_Case--Diesel GenSet Casing	1860	0	dBA	5552	0	dBA	8533	0	dBA	8295	0	dBA
JLG_125ft_01_mi	JLG--125feet	2009	0	dBA	5551	0	dBA	8380	0	dBA	8301	0	dBA
JLG_125ft_02_mi	JLG--125feet	4274	0	dBA	5003	0	dBA	5684	0	dBA	9901	0	dBA
Light_tower_02	Light Tower Diesel	3318	0	dBA	5266	0	dBA	6827	0	dBA	8994	0	dBA
Light_tower_03	Light Tower Diesel	5056	0	dBA	5246	0	dBA	4892	0	dBA	10351	0	dBA
Light_tower_04	Light Tower Diesel	3684	0	dBA	2485	0	dBA	6832	0	dBA	11632	0	dBA
Light_tower_05	Light Tower Diesel	4541	0	dBA	1790	0	dBA	6676	0	dBA	12623	0	dBA
Light_tower_06	Light Tower Diesel	4530	0	dBA	1794	0	dBA	6679	0	dBA	12612	0	dBA
Light_tower_07	Light Tower Diesel	4549	0	dBA	6438	0	dBA	6261	0	dBA	8491	0	dBA
Light_tower_08	Light Tower Diesel	4549	0	dBA	6439	0	dBA	6263	0	dBA	8489	0	dBA
Light_tower_09	Light Tower Diesel	5512	0	dBA	4216	0	dBA	4504	0	dBA	11804	0	dBA
Light_tower_10	Light Tower Diesel	5501	0	dBA	4221	0	dBA	4510	0	dBA	11789	0	dBA
Light_tower_11	Light Tower Diesel	4425	0	dBA	4161	0	dBA	5467	0	dBA	10824	0	dBA
Light_tower_12	Light Tower Diesel	4426	0	dBA	4225	0	dBA	5458	0	dBA	10768	0	dBA
Light_tower_13	Light Tower Diesel	4985	0	dBA	5741	0	dBA	5186	0	dBA	9742	0	dBA
Light_tower_14	Light Tower Diesel	5088	0	dBA	5343	0	dBA	4886	0	dBA	10281	0	dBA
Light_tower_15	Light Tower Diesel	4763	0	dBA	7905	0	dBA	7866	0	dBA	6605	0	dBA
Light_tower_16	Light Tower Diesel	4871	0	dBA	5991	0	dBA	5485	0	dBA	9341	0	dBA
Light_tower_17	Light Tower Diesel	4784	0	dBA	6279	0	dBA	5821	0	dBA	8908	0	dBA
Light_tower_18	Light Tower Diesel	4605	0	dBA	6528	0	dBA	6280	0	dBA	8425	0	dBA
Light_tower_19	Light Tower Diesel	5254	0	dBA	6719	0	dBA	5627	0	dBA	8831	0	dBA
Light_tower_20	Light Tower Diesel	5526	0	dBA	8158	0	dBA	7156	0	dBA	7033	0	dBA

Notes on Table:
1. dBA = 1-hour energy equivalent sound (Leq (1-hr))
2. Height above local grade 3. MS = Mobile Source

Table A-1b: Construction Phase - Point of Reception Noise Impact

Evening/Nighttime - LAeq,1hr

Project: Great Bear Project
Location: Red Lake, ON

Source ID	Source Description	Residence/Cabin/Lodge/Camp POR1 POR1 POR1 Point of Reception ID: POR1			Residence/Cabin/Lodge/Camp POR4 POR4 POR4 Point of Reception ID: POR4			Residence/Cabin/Lodge/Camp POR5 POR5 POR5 Point of Reception ID: POR5			Residence/Cabin/Lodge/Camp POR6 POR6 POR6 Point of Reception ID: POR6		
		Point of Reception Description: Residence/Cabin/Lodge/Camp			Point of Reception Description: Residence/Cabin/Lodge/Camp			Point of Reception Description: Residence/Cabin/Lodge/Camp			Point of Reception Description: Residence/Cabin/Lodge/Camp		
		Point of reception coordinates			Point of reception coordinates			Point of reception coordinates			Point of reception coordinates		
		X	Y	Z [2]	X	Y	Z [2]	X	Y	Z [2]	X	Y	Z [2]
		456965	5639223	372	451915	5639044	357	451671	5630891	354	465139	5634939	350
		Point of Reception 1			Point of Reception 4			Point of Reception 5			Point of Reception 6		
		Distance [3] (m)	Sound Level at PoR	Units [1] (dBA)	Distance [3] (m)	Sound Level at PoR	Units [1] (dBA)	Distance [3] (m)	Sound Level at PoR	Units [1] (dBA)	Distance [3] (m)	Sound Level at PoR	Units [1] (dBA)
Light_tower_21	Light Tower Diesel	4794	0	dBA	7914	0	dBA	7835	0	dBA	6621	0	dBA
Light_tower_23	Light Tower Diesel	3440	0	dBA	6035	0	dBA	7230	0	dBA	8190	0	dBA
Light_tower_24	Light Tower Diesel	3853	0	dBA	5836	0	dBA	6590	0	dBA	8677	0	dBA
Light_tower_25	Light Tower Diesel	4262	0	dBA	7313	0	dBA	7671	0	dBA	7063	0	dBA
Light_tower_26	Light Tower Diesel	4633	0	dBA	8728	0	dBA	9601	0	dBA	5217	0	dBA
Light_tower_27	Light Tower Diesel	2624	0	dBA	5724	0	dBA	7875	0	dBA	8217	0	dBA
Light_tower_28	Light Tower Diesel	4610	0	dBA	4973	0	dBA	5313	0	dBA	10212	0	dBA
Light_tower_29	Light Tower Diesel	2121	0	dBA	5553	0	dBA	8266	0	dBA	8309	0	dBA
Light_tower_30	Light Tower Diesel	1898	0	dBA	5518	0	dBA	8468	0	dBA	8329	0	dBA
Light_tower_31	Light Tower Diesel	1990	0	dBA	5547	0	dBA	8397	0	dBA	8304	0	dBA
Light_tower_32	Light Tower Diesel	5747	0	dBA	8121	0	dBA	6771	0	dBA	7374	0	dBA
Light_tower_33	Light Tower Diesel	5753	0	dBA	8145	0	dBA	6800	0	dBA	7343	0	dBA
Light_tower_34	Light Tower Diesel	5899	0	dBA	8453	0	dBA	7084	0	dBA	7026	0	dBA
Light_tower_35	Light Tower Diesel	5925	0	dBA	8486	0	dBA	7100	0	dBA	7005	0	dBA
Light_tower_36	Light Tower Diesel	6040	0	dBA	8556	0	dBA	7046	0	dBA	7044	0	dBA
Light_tower_37	Light Tower Diesel	6079	0	dBA	8598	0	dBA	7058	0	dBA	7027	0	dBA
Light_tower_38	Light Tower Diesel	5651	0	dBA	6933	0	dBA	5316	0	dBA	9004	0	dBA
Light_tower_39	Light Tower Diesel	5665	0	dBA	6968	0	dBA	5334	0	dBA	8974	0	dBA
Light_tower_40	Light Tower Diesel	5011	0	dBA	6446	0	dBA	5679	0	dBA	8925	0	dBA
LightingPlant_41	Light Tower Diesel	4602	0	dBA	4940	0	dBA	5314	0	dBA	10239	0	dBA
LightingPlant_42	Light Tower Diesel	4487	0	dBA	4885	0	dBA	5426	0	dBA	10195	0	dBA
LightingPlant_43	Light Tower Diesel	4481	0	dBA	5014	0	dBA	5463	0	dBA	10060	0	dBA
LightingPlant_44	Light Tower Diesel	4630	0	dBA	5073	0	dBA	5316	0	dBA	10129	0	dBA
Light_tower_01	Light Tower Diesel	4277	0	dBA	4896	0	dBA	5652	0	dBA	10013	0	dBA
Light_tower_22	Light Tower Diesel	4977	0	dBA	7863	0	dBA	7490	0	dBA	6882	0	dBA
ManLiftArticulated_60ft_01_mi	Manlift Articulating--60feet	1911	0	dBA	5607	0	dBA	8527	0	dBA	8240	0	dBA
ManLiftArticulated_60ft_02_mi	Manlift Articulating--60feet	1967	0	dBA	5623	0	dBA	8483	0	dBA	8225	0	dBA
ManLiftArticulated_60ft_03_mi	Manlift Articulating--60feet	2020	0	dBA	5642	0	dBA	8444	0	dBA	8209	0	dBA
ManLiftArticulated_60ft_04_mi	Manlift Articulating--60feet	4325	0	dBA	5036	0	dBA	5638	0	dBA	9908	0	dBA
ManLiftArticulated_60ft_05_mi	Manlift Articulating--60feet	4347	0	dBA	4724	0	dBA	5546	0	dBA	10239	0	dBA
ManLiftArticulated_60ft_06_mi	Manlift Articulating--60feet	4276	0	dBA	4872	0	dBA	5649	0	dBA	10035	0	dBA
Mill_DieselPower_100kW_case_1	DieselGen_100kW_Case--Diesel GenSet Casing	4528	0	dBA	5002	0	dBA	5408	0	dBA	10112	0	dBA
Mill_DieselPower_100kW_case_2	DieselGen_100kW_Case--Diesel GenSet Casing	4528	0	dBA	5002	0	dBA	5408	0	dBA	10112	0	dBA
Mill_DieselPower_100kW_case_3	DieselGen_100kW_Case--Diesel GenSet Casing	4528	0	dBA	5002	0	dBA	5409	0	dBA	10112	0	dBA
Mill_DieselPower_100kW_case_5	DieselGen_100kW_Case--Diesel GenSet Casing	4527	0	dBA	5002	0	dBA	5409	0	dBA	10112	0	dBA
Mill_DieselPower_100kW_case_4	DieselGen_100kW_Case--Diesel GenSet Casing	4528	0	dBA	5002	0	dBA	5409	0	dBA	10112	0	dBA
Mill_misc_DieselGenSet_100kW_ex_1	DieselGen_100kW_Ex--Diesel GenSet Exhaust	4528	0	dBA	5002	0	dBA	5408	0	dBA	10112	0	dBA
NaturalGasGen_1300kW	NG_1300kW_all--Natural Gas Generator; for both case and exhaust	4911	0	dBA	5460	0	dBA	5134	0	dBA	9981	0	dBA
NaturalGasGen_1300kW	NG_1300kW_all--Natural Gas Generator; for both case and exhaust	4922	0	dBA	5465	0	dBA	5124	0	dBA	9986	0	dBA
NaturalGasGen_1300kW	NG_1300kW_all--Natural Gas Generator; for both case and exhaust	4903	0	dBA	5458	0	dBA	5143	0	dBA	9975	0	dBA
NaturalGasGen_1300kW	NG_1300kW_all--Natural Gas Generator; for both case and exhaust	4907	0	dBA	5459	0	dBA	5138	0	dBA	9978	0	dBA
NaturalGasGen_1300kW	NG_1300kW_all--Natural Gas Generator; for both case and exhaust	4917	0	dBA	5463	0	dBA	5129	0	dBA	9983	0	dBA
NaturalGasGen_1300kW	NG_1300kW_all--Natural Gas Generator; for both case and exhaust	4927	0	dBA	5467	0	dBA	5119	0	dBA	9989	0	dBA
DieselGenSet_500kW_case	DieselGen_500kW_Case--	4898	-1	dBA	5452	-4	dBA	5146	-3	dBA	9977	-11	dBA
DieselGenSet_500kW_case	DieselGen_500kW_Case--	4906	-2	dBA	5454	-4	dBA	5138	-2	dBA	9982	-12	dBA
DieselGenSet_500kW_case	DieselGen_500kW_Case--	4914	-2	dBA	5456	-4	dBA	5129	-2	dBA	9988	-12	dBA
DieselGenSet_500kW_case	DieselGen_500kW_Case--	4923	-2	dBA	5460	-4	dBA	5120	-2	dBA	9993	-12	dBA
RoadGrader_CAT16_01_mi	Road Grader--CAT 16	MS	0	dBA	MS	0	dBA	MS	0	dBA	MS	0	dBA
RigidTruck_150t_mi	Rigid Truck--150t	MS	0	dBA	MS	0	dBA	MS	0	dBA	MS	0	dBA
RigidTruck_150t_mi	Rigid Truck--150t	MS	0	dBA	MS	0	dBA	MS	0	dBA	MS	0	dBA
SecurityShack_DieselGen_100kW_Case	DieselGen_100kW_Case--Diesel GenSet Casing	1169	0	dBA	5517	0	dBA	9196	0	dBA	8410	0	dBA
Telehandler_CAT1055_mi	Telehandler--	4296	0	dBA	4896	0	dBA	5632	0	dBA	10027	0	dBA
DixieWaterPumpDieselGen_100kW_case	DieselGen_100kW_Case--Diesel GenSet Casing	5511	0	dBA	6390	0	dBA	4980	0	dBA	9537	0	dBA
DieselWaterPump_Dixie_100kW_ex	DieselGen_100kW_Ex--Diesel GenSet Exhaust	5510	0	dBA	6392	0	dBA	4983	0	dBA	9534	0	dBA
WaterTruck_CAT745_mi	Truck (Water) --	MS	0	dBA	MS	0	dBA	MS	0	dBA	MS	0	dBA
WeldMachine_Vantage400_01_mi	Welding Machine--Vantage 400	4265	0	dBA	4796	0	dBA	5645	0	dBA	10102	0	dBA
WeldMachine_Vantage400_02_mi	Welding Machine--Vantage 400	4204	0	dBA	4778	0	dBA	5706	0	dBA	10073	0	dBA
WeldMachine_Vantage400_03_mi	Welding Machine--Vantage 400	1898	0	dBA	5600	0	dBA	8535	0	dBA	8247	0	dBA
WheelLoader_CAT950_01_mi	Wheel Loader--	1933	0	dBA	5502	0	dBA	8419	0	dBA	8348	0	dBA

Notes on Table:
1. dBA = 1-hour energy equivalent sound (Leq (1-hr))
2. Height above local grade 3. MS = Mobile Source

Table A-1b: Construction Phase - Point of Reception Noise Impact

Evening/Nighttime - LAeq,1hr

Project: Great Bear Project
Location: Red Lake, ON

		Residence/Cabin/Lodge/Camp POR1 POR1 POR1			Residence/Cabin/Lodge/Camp POR4 POR4 POR4			Residence/Cabin/Lodge/Camp POR5 POR5 POR5			Residence/Cabin/Lodge/Camp POR6 POR6 POR6		
		Point of Reception ID			**Point of Reception ID**			**Point of Reception ID**			**Point of Reception ID**		
		POR1			**POR4**			**POR5**			**POR6**		
		Point of Reception Description			**Point of Reception Description**			**Point of Reception Description**			**Point of Reception Description**		
		Residence/Cabin/Lodge/Camp			**Residence/Cabin/Lodge/Camp**			**Residence/Cabin/Lodge/Camp**			**Residence/Cabin/Lodge/Camp**		
		Point of reception coordinates			**Point of reception coordinates**			**Point of reception coordinates**			**Point of reception coordinates**		
		X	**Y**	**Z [2]**	**X**	**Y**	**Z [2]**	**X**	**Y**	**Z [2]**	**X**	**Y**	**Z [2]**
		456965	5639223	372	451915	5639044	357	451671	5630891	354	465139	5634939	350
Source ID	**Source Description**	**Point of Reception 1**			**Point of Reception 4**			**Point of Reception 5**			**Point of Reception 6**		
		Distance [3] (m)	**Sound Level at PoR**	**Units [1] (dBA)**	**Distance [3] (m)**	**Sound Level at PoR**	**Units [1] (dBA)**	**Distance [3] (m)**	**Sound Level at PoR**	**Units [1] (dBA)**	**Distance [3] (m)**	**Sound Level at PoR**	**Units [1] (dBA)**
WheelLoader_CAT950_02_mi	Wheel Loader--	4330	0	dBA	4837	0	dBA	5584	0	dBA	10113	0	dBA
WheelLoader_CAT966_01_mi	Loader (FEL)--CAT 966	MS	0	dBA	MS	0	dBA	MS	0	dBA	MS	0	dBA
Loader_CAT966_02_mi	Loader (FEL)--CAT 966	MS	0	dBA	MS	0	dBA	MS	0	dBA	MS	0	dBA
WheelLoader_CAT966_03_mi	Loader (FEL)--CAT 966	MS	0	dBA	MS	0	dBA	MS	0	dBA	MS	0	dBA
DeWaterinMiscDieselGen_100kW_case	DieselGen_100kW_Case--Diesel GenSet Casing	4834	0	dBA	7218	0	dBA	6770	0	dBA	7705	0	dBA
DieselDewatering_misc_100kW_ex	DieselGen_100kW_Ex--Diesel GenSet Exhaust	4834	0	dBA	7219	0	dBA	6771	0	dBA	7704	0	dBA
ZoomBoomTruck_01_mi	Zoom Boom--	4287	0	dBA	4806	0	dBA	5623	0	dBA	10109	0	dBA
ZoomBoomTruck_02_mi	Zoom Boom--	4241	0	dBA	4869	0	dBA	5685	0	dBA	10011	0	dBA
ZoomBoomTruck_03_mi	Zoom Boom--	4812	0	dBA	5122	0	dBA	5129	0	dBA	10244	0	dBA
ZoomBoomTruck_04_mi	Zoom Boom--	1867	0	dBA	5502	0	dBA	8485	0	dBA	8346	0	dBA
AirCompressor_S185Q_01_pr	Air Compressor--Sullair 185Q	4557	0	dBA	4914	0	dBA	5357	0	dBA	10226	0	dBA
AirCompressor_S185Q_02_pr	Air Compressor--Sullair 185Q	4567	0	dBA	5033	0	dBA	5374	0	dBA	10114	0	dBA
BatchPlant_crf	Batch Plant -- Ref FHA -- Single 500 Hz band noise	4879	0	dBA	5990	0	dBA	5475	0	dBA	9350	0	dBA
BatchPlant_pr	Batch Plant -- Ref FHA -- Single 500 Hz band noise	4591	0	dBA	5012	0	dBA	5343	0	dBA	10157	0	dBA
BackhoeLoader_CAT430_pr	Backhoe Loader--Cat 430	4562	0	dBA	5008	0	dBA	5373	0	dBA	10135	0	dBA
BoomTruck_25t_01_pr	Boom Truck 25t--Terex 5092, 2-Stage Jib	4525	0	dBA	4942	0	dBA	5398	0	dBA	10169	0	dBA
BoomTruck_25t_02_pr	Boom Truck 25t--Terex 5092, 2-Stage Jib	4541	0	dBA	4948	0	dBA	5382	0	dBA	10177	0	dBA
ConcreteMixer_pr	Concrete mixer-- 250 L	4624	0	dBA	4996	0	dBA	5303	0	dBA	10202	0	dBA
Compresor_S375H_01_pr	Compressor--Sullair 375H	4563	0	dBA	4946	0	dBA	5357	0	dBA	10199	0	dBA
Compresor_S375H_02_pr	Compressor--Sullair 375H	4484	0	dBA	4937	0	dBA	5440	0	dBA	10140	0	dBA
Compresor_S375H_03_pr	Compressor--Sullair 375H	4522	0	dBA	5005	0	dBA	5416	0	dBA	10104	0	dBA
Compresor_S375H_04_pr	Compressor--Sullair 375H	4572	0	dBA	5013	0	dBA	5363	0	dBA	10139	0	dBA
Compresor_S375H_05_pr	Compressor--Sullair 375H	4770	0	dBA	5082	0	dBA	5164	0	dBA	10246	0	dBA
Compresor_S375H_06_pr	Compressor--Sullair 375H	5016	0	dBA	5251	0	dBA	4938	0	dBA	10306	0	dBA
Compresor_S375H_07_pr	Compressor--Sullair 375H	4873	0	dBA	5982	0	dBA	5477	0	dBA	9354	0	dBA
Compresor_S375H_08_pr	Compressor--Sullair 375H	2644	0	dBA	5672	0	dBA	7812	0	dBA	8279	0	dBA
Compresor_S375H_09_pr	Compressor--Sullair 375H	2560	0	dBA	5659	0	dBA	7891	0	dBA	8271	0	dBA
Compresor_S375H_10_pr	Compressor--Sullair 375H	2596	0	dBA	5719	0	dBA	7900	0	dBA	8216	0	dBA
Compresor_S375H_11_pr	Compressor--Sullair 375H	2582	0	dBA	5705	0	dBA	7904	0	dBA	8227	0	dBA
Compresor_S375H_12_pr	Compressor--Sullair 375H	2563	0	dBA	5684	0	dBA	7907	0	dBA	8245	0	dBA
Compresor_S375H_13_pr	Compressor--Sullair 375H	2546	0	dBA	5670	0	dBA	7914	0	dBA	8257	0	dBA
ConcreteInternalVibrator_01_pr	Concrete Internal Vibrator--	4776	0	dBA	5116	0	dBA	5167	0	dBA	10217	0	dBA
ConcreteInternalVibrator_02_pr	Concrete Internal Vibrator--	4625	0	dBA	4980	0	dBA	5298	0	dBA	10218	0	dBA
ConcreteInternalVibrator_03_pr	Concrete Internal Vibrator--	4554	0	dBA	5048	0	dBA	5392	0	dBA	10087	0	dBA
ConcreteInternalVibrator_04_pr	Concrete Internal Vibrator--	4482	0	dBA	4928	0	dBA	5440	0	dBA	10148	0	dBA
ConcretePumpTruck_pr	Concrete Pump Truck--	MS	0	dBA	MS	0	dBA	MS	0	dBA	MS	0	dBA
ConcreteTruck_8m3_pr	Concrete Truck --8m3 capacity, 6x4, 310 HP	MS	0	dBA	MS	0	dBA	MS	0	dBA	MS	0	dBA
ConcreteVibratoryPowerScreen_01_pr	Concrete Vibratory Power Screeds--	4580	0	dBA	4967	0	dBA	5344	0	dBA	10192	0	dBA
ConcreteVibratoryPowerScreen_02_pr	Concrete Vibratory Power Screeds--	4491	0	dBA	4965	0	dBA	5439	0	dBA	10118	0	dBA
ConcreteTrowelPower_01_pr	Concrete Trowel Power--	4630	0	dBA	5030	0	dBA	5304	0	dBA	10173	0	dBA
ConcreteTrowelPower_02_pr	Concrete Trowel Power--	4787	0	dBA	5077	0	dBA	5145	0	dBA	10266	0	dBA
Crane_150t_pr	Crawler Conventional Crane 150T (used)--	4514	0	dBA	5010	0	dBA	5426	0	dBA	10092	0	dBA
CraneDEMAG_300t_pr	300T Crane - DEMAG-- DEMAG	4511	0	dBA	4991	0	dBA	5424	0	dBA	10109	0	dBA
Crane_80t_01_pr	Crane--80t	5144	0	dBA	5281	0	dBA	4804	0	dBA	10403	0	dBA
Crane_80t_02_pr	Crane--80t	4550	0	dBA	4988	0	dBA	5381	0	dBA	10146	0	dBA
CraneRemoteTerrain_80t_01_pr	RT Crane 80T--	4860	0	dBA	5989	0	dBA	5498	0	dBA	9333	0	dBA
CraneRemoteTerrain_80t_02_pr	RT Crane 80T--	5040	0	dBA	5236	0	dBA	4907	0	dBA	10346	0	dBA
CraneTerex_RT555_pr	Crane 55t--Terex RT555, 2-Stage Jib	4509	0	dBA	4928	0	dBA	5412	0	dBA	10170	0	dBA
CraneTerex_RT670_01_pr	Crane 70t--Terex RT670	4508	0	dBA	4950	0	dBA	5417	0	dBA	10148	0	dBA
CraneTerex_RT670_02_pr	Crane 70t--Terex RT670	4508	0	dBA	4970	0	dBA	5422	0	dBA	10127	0	dBA
Dozer_CAT_D8_01_pr	Dozer--CAT D8	4540	0	dBA	4971	0	dBA	5387	0	dBA	10154	0	dBA
Dozer_CAT_D8_02_pr	Dozer--CAT D8	5116	0	dBA	5292	0	dBA	4839	0	dBA	10363	0	dBA
DrumRoll_01_pr	Manual Drum Roller	4786	0	dBA	5101	0	dBA	5152	0	dBA	10241	0	dBA
DrumRoller_66in_pr	Drum Roller--66"	4540	0	dBA	4971	0	dBA	5387	0	dBA	10154	0	dBA
DumperTruck_01_pr	Dumper Truck	MS	0	dBA	MS	0	dBA	MS	0	dBA	MS	0	dBA
DumperTruck_02_pr	Dumper Truck	MS	0	dBA	MS	0	dBA	MS	0	dBA	MS	0	dBA
Exca_120t_01_pr	Excavator--120t	5171	0	dBA	5323	0	dBA	4786	0	dBA	10386	0	dBA
Exca_120t_02_pr	Excavator--120t	4553	0	dBA	4966	0	dBA	5372	0	dBA	10170	0	dBA
Exca_35t_01_pr	Excavator--35t	5123	0	dBA	5267	0	dBA	4823	0	dBA	10397	0	dBA

Notes on Table:
1. dBA = 1-hour energy equivalent sound (Leq (1-hr))
2. Height above local grade 3. MS = Mobile Source

Table A-1b: Construction Phase - Point of Reception Noise Impact

Evening/Nighttime - LAeq,1hr

Project: Great Bear Project
Location: Red Lake, ON

	Residence/Cabin/Lodge/Camp POR1 POR1 POR1	Residence/Cabin/Lodge/Camp POR4 POR4 POR4	Residence/Cabin/Lodge/Camp POR5 POR5 POR5	Residence/Cabin/Lodge/Camp POR6 POR6 POR6
Point of Reception ID	**POR1**	**POR4**	**POR5**	**POR6**
Point of Reception Description	**Residence/Cabin/Lodge/Camp**	**Residence/Cabin/Lodge/Camp**	**Residence/Cabin/Lodge/Camp**	**Residence/Cabin/Lodge/Camp**
Point of reception coordinates				
X	456965	451915	451671	465139
Y	5639223	5639044	5630891	5634939
Z [2]	372	357	354	350

Source ID	Source Description	Point of Reception 1			Point of Reception 4			Point of Reception 5			Point of Reception 6		
		Distance [3] (m)	Sound Level at PoR	Units [1] (dBA)	Distance [3] (m)	Sound Level at PoR	Units [1] (dBA)	Distance [3] (m)	Sound Level at PoR	Units [1] (dBA)	Distance [3] (m)	Sound Level at PoR	Units [1] (dBA)
Exca_35t_02_pr	Excavator--35t	4514	0	dBA	4962	0	dBA	5414	0	dBA	10141	0	dBA
FlatBedBoomTruck_HX620_pr	Flat Bed or Boom Truck --	MS	0	dBA	MS	0	dBA	MS	0	dBA	MS	0	dBA
ForkliftGenie_4t_01_pr	FORKLIFT--Genie 4 ton Ext boom	4478	0	dBA	4898	0	dBA	5438	0	dBA	10175	0	dBA
ForkliftGenie_4t_02_pr	FORKLIFT--Genie 4 ton Ext boom	4591	0	dBA	4955	0	dBA	5329	0	dBA	10214	0	dBA
ForkliftGenie_4t_03_pr	FORKLIFT--Genie 4 ton Ext boom	4507	0	dBA	5023	0	dBA	5437	0	dBA	10072	0	dBA
ForkliftGenie_4t_04_pr	FORKLIFT--Genie 4 ton Ext boom	4537	0	dBA	4906	0	dBA	5377	0	dBA	10217	0	dBA
ForkliftGenie_4t_05_pr	FORKLIFT--Genie 4 ton Ext boom	4609	0	dBA	5043	0	dBA	5331	0	dBA	10141	0	dBA
ForkliftGenie_4t_06_pr	FORKLIFT--Genie 4 ton Ext boom	4627	0	dBA	4958	0	dBA	5291	0	dBA	10243	0	dBA
FusionMachine_01_pr	Fusion Machine--Ritmo Delta 250	4551	0	dBA	4995	0	dBA	5382	0	dBA	10139	0	dBA
FusionMachine_02_pr	Fusion Machine--Ritmo Delta 250	4734	0	dBA	5090	0	dBA	5206	0	dBA	10205	0	dBA
FusionMachine_03_pr	Fusion Machine--Ritmo Delta 250	4581	0	dBA	4918	0	dBA	5332	0	dBA	10243	0	dBA
FusionMachine_04_pr	Fusion Machine--Ritmo Delta 250	4567	0	dBA	4910	0	dBA	5346	0	dBA	10238	0	dBA
GenSet_13kVA_01_pr	Genset-- 13kVA	5068	0	dBA	5227	0	dBA	4874	0	dBA	10382	0	dBA
GenSet_13kVA_02_pr	Genset-- 13kVA	4585	0	dBA	4984	0	dBA	5342	0	dBA	10180	0	dBA
GenSet_13kVA_03_pr	Genset-- 13kVA	4807	0	dBA	5094	0	dBA	5127	0	dBA	10268	0	dBA
GenSet_13kVA_04_pr	Genset-- 13kVA	4862	0	dBA	5982	0	dBA	5490	0	dBA	9343	0	dBA
GenSet_13kVA_05_pr	Genset-- 13kVA	4888	0	dBA	5987	0	dBA	5461	0	dBA	9363	0	dBA
GenSet_13kVA_06_pr	Genset-- 13kVA	5028	0	dBA	5262	0	dBA	4928	0	dBA	10306	0	dBA
Genset_75k_01_pr	Genset--75kVA	4579	0	dBA	4997	0	dBA	5351	0	dBA	10162	0	dBA
Genset_75k_02_pr	Genset--75kVA	4489	0	dBA	4975	0	dBA	5443	0	dBA	10107	0	dBA
RoadGrader_CAT16_02_pr	Road Grader--CAT 16	5116	0	dBA	5292	0	dBA	4839	0	dBA	10363	0	dBA
RoadGrader_CAT16_01_pr	Road Grader--CAT 16	4540	0	dBA	4972	0	dBA	5388	0	dBA	10153	0	dBA
Heater_350kBTU_pr	Heater--Indirect Fire 350000 BTU	4591	0	dBA	4927	0	dBA	5323	0	dBA	10243	0	dBA
JumpinJackCompactor_01_pr	Compactor-- Jumping Jack	4623	0	dBA	4939	0	dBA	5291	0	dBA	10259	0	dBA
JumpinJackCompactor_02_pr	Compactor-- Jumping Jack	4632	0	dBA	4939	0	dBA	5281	0	dBA	10267	0	dBA
LiftTruck_2t_pr	Lift Truck 2.5t--MH25-4, 4x4, 60HP	4529	0	dBA	5033	0	dBA	5415	0	dBA	10081	0	dBA
ManDruRol	Manual Drum Roller	4609	0	dBA	5058	0	dBA	5335	0	dBA	10125	0	dBA
MiniExcavator_CAT305_pr	Mini Excavator--Cat 305D CR	4577	0	dBA	5022	0	dBA	5360	0	dBA	10134	0	dBA
PortableGenset_01_pr	Portable Genset Diesel--3k	4595	0	dBA	5026	0	dBA	5342	0	dBA	10145	0	dBA
PortableGenset_02_pr	Portable Genset Diesel--3k	4560	0	dBA	4930	0	dBA	5357	0	dBA	10212	0	dBA
PortableGenset_03_pr	Portable Genset Diesel--3k	4454	0	dBA	4894	0	dBA	5463	0	dBA	10158	0	dBA
PortableGenset_04_pr	Portable Genset Diesel--3k	4503	0	dBA	5008	0	dBA	5437	0	dBA	10085	0	dBA
PrimaryDrill_D65_01_pr	Primary Drill--140mm SmartRoc D65	4575	0	dBA	4982	0	dBA	5353	0	dBA	10173	0	dBA
PrimaryDrill_D65_02_pr	Primary Drill--140mm SmartRoc D65	4478	0	dBA	4965	0	dBA	5454	0	dBA	10107	0	dBA
PickUpTruck_F150_01_pr	Pick-up--F150	MS	0	dBA	MS	0	dBA	MS	0	dBA	MS	0	dBA
PickUpTruck_F150_02_pr	Pick-up--F150	MS	0	dBA	MS	0	dBA	MS	0	dBA	MS	0	dBA
RoadGrader_CAT16_02_pr	Road Grader--CAT 16	MS	0	dBA	MS	0	dBA	MS	0	dBA	MS	0	dBA
RoadGrader_CAT16_pr	Road Grader--CAT 16	MS	0	dBA	MS	0	dBA	MS	0	dBA	MS	0	dBA
RockCrusher_UD211_crf	Rock Crusher--Sandvik UD211	4890	0	dBA	5993	0	dBA	5463	0	dBA	9357	0	dBA
RockCrusher_UD211_pr	Rock Crusher--Sandvik UD211	4777	0	dBA	5436	0	dBA	5279	0	dBA	9880	0	dBA
ScissorLift_13m_01_pr	Scissor lift--13.1 m capacity, 4X4	4541	0	dBA	4935	0	dBA	5379	0	dBA	10190	0	dBA
ScissorLift_13m_02_pr	Scissor lift--13.1 m capacity, 4X4	4557	0	dBA	5017	0	dBA	5381	0	dBA	10122	0	dBA
ServiceManLift_18m_01_pr	Manlift 18m-- 600 AJ JLG Diesel, RT	4528	0	dBA	4994	0	dBA	5407	0	dBA	10120	0	dBA
ServiceManLift_18m_02_pr	Manlift 18m-- 600 AJ JLG Diesel, RT	4551	0	dBA	5023	0	dBA	5388	0	dBA	10111	0	dBA
ServiceManLift_18m_03_pr	Manlift 18m-- 600 AJ JLG Diesel, RT	4542	0	dBA	4904	0	dBA	5371	0	dBA	10224	0	dBA
ServicePlatformTruck_20ft_pr	20' Service Platform Truck--	4527	0	dBA	5016	0	dBA	5413	0	dBA	10097	0	dBA
SkidSteerProcessPlant_01_pr	Skidsteer--	4596	0	dBA	4970	0	dBA	5327	0	dBA	10203	0	dBA
SkidSteerProcessPlant_02_pr	Skidsteer--	4509	0	dBA	4938	0	dBA	5414	0	dBA	10160	0	dBA
SkidSteerLoader_CAT252_pr	Skid Steer Loader--Cat 252B - Bucket & Fork	4559	0	dBA	4991	0	dBA	5373	0	dBA	10150	0	dBA
TandemWaterTruck_2500_pr	Tadem Water Trucks-- 2500 gls	MS	0	dBA	MS	0	dBA	MS	0	dBA	MS	0	dBA
Telehandler_CAT1055_01_pr	Telehandler--Cat TL1055	4569	0	dBA	5045	0	dBA	5375	0	dBA	10103	0	dBA
Telehandler_CAT1055_02_pr	Telehandler--Cat TL1055	4569	0	dBA	5061	0	dBA	5379	0	dBA	10087	0	dBA
VibratingPlateCompactor_01_pr	Vibrating Plate Compactor--600mm x 600mm	4624	0	dBA	4971	0	dBA	5297	0	dBA	10227	0	dBA
VibratingPlateCompactor_02_pr	Vibrating Plate Compactor--600mm x 600mm	4556	0	dBA	5040	0	dBA	5388	0	dBA	10098	0	dBA
VibratingPlateCompactor_03_pr	Vibrating Plate Compactor--600mm x 600mm	4640	0	dBA	5079	0	dBA	5306	0	dBA	10131	0	dBA
WeldMachine_Vantage400_01_pr	Welding Machine--Vantage 400	4576	0	dBA	4945	0	dBA	5343	0	dBA	10211	0	dBA
WeldMachine_Vantage400_02_pr	Welding Machine--Vantage 400	4490	0	dBA	4945	0	dBA	5436	0	dBA	10137	0	dBA
WeldMachine_Vantage400_03_pr	Welding Machine--Vantage 400	4475	0	dBA	4984	0	dBA	5461	0	dBA	10085	0	dBA
WeldMachine_Vantage400_04_pr	Welding Machine--Vantage 400	4593	0	dBA	5037	0	dBA	5346	0	dBA	10133	0	dBA

Notes on Table:
1. dBA = 1-hour energy equivalent sound (Leq (1-hr))
2. Height above local grade 3. MS = Mobile Source

Table A-1b: Construction Phase - Point of Reception Noise Impact

Evening/Nighttime - LAeq,1hr

Project: Great Bear Project
Location: Red Lake, ON

		Residence/Cabin/Lodge/Camp POR1 POR1 POR1	Residence/Cabin/Lodge/Camp POR4 POR4 POR4	Residence/Cabin/Lodge/Camp POR5 POR5 POR5	Residence/Cabin/Lodge/Camp POR6 POR6 POR6
		Point of Reception ID	**Point of Reception ID**	**Point of Reception ID**	**Point of Reception ID**
		POR1	**POR4**	**POR5**	**POR6**
		Point of Reception Description	**Point of Reception Description**	**Point of Reception Description**	**Point of Reception Description**
		Residence/Cabin/Lodge/Camp	**Residence/Cabin/Lodge/Camp**	**Residence/Cabin/Lodge/Camp**	**Residence/Cabin/Lodge/Camp**
		Point of reception coordinates	**Point of reception coordinates**	**Point of reception coordinates**	**Point of reception coordinates**
		X **Y** **Z [2]**	**X** **Y** **Z [2]**	**X** **Y** **Z [2]**	**X** **Y** **Z [2]**
		456965 5639223 372	451915 5639044 357	451671 5630891 354	465139 5634939 350

Source ID	Source Description	Point of Reception 1			Point of Reception 4			Point of Reception 5			Point of Reception 6		
		Distance [3] (m)	Sound Level at PoR	Units [1] (dBA)	Distance [3] (m)	Sound Level at PoR	Units [1] (dBA)	Distance [3] (m)	Sound Level at PoR	Units [1] (dBA)	Distance [3] (m)	Sound Level at PoR	Units [1] (dBA)
WeldMachine_Vantage400_05_pr	Welding Machine--Vantage 400	4580	0	dBA	4954	0	dBA	5340	0	dBA	10206	0	dBA
WeldMachine_Vantage400_06_pr	Welding Machine--Vantage 400	4575	0	dBA	4931	0	dBA	5341	0	dBA	10224	0	dBA
WeldMachine_Vantage400_07_pr	Welding Machine--Vantage 400	5018	0	dBA	5226	0	dBA	4929	0	dBA	10334	0	dBA
WheelLoader_CAT950_pr	Wheel Loader with Quick Coupler--Cat 950H	4506	0	dBA	5006	0	dBA	5434	0	dBA	10089	0	dBA
BackHoe_PC1250_q	Quarry Source - Production Backhoe--PC1250 (6.7m3)	5287	0	dBA	2232	0	dBA	5975	0	dBA	13031	0	dBA
BackHoe_330_bp	Backhoe--330	4733	0	dBA	911	0	dBA	7378	0	dBA	13221	0	dBA
BlastLoaderCAT262	Blasting Loader--CAT 262	6064	0	dBA	3062	0	dBA	5096	0	dBA	13342	0	dBA
BlastTruck_F350_q	Blasters Truck--F350	MS	0	dBA	MS	0	dBA	MS	0	dBA	MS	0	dBA
Dozer_CAT_D6_bp	Dozer - D6--CAT D6	4469	0	dBA	1675	0	dBA	6822	0	dBA	12633	0	dBA
Dozer_CAT_D8_q	Dozer--CAT D8	6101	0	dBA	3042	0	dBA	5117	0	dBA	13401	0	dBA
DewateringPump_01_q	Dewatering Pump--DeWPump	6048	0	dBA	2916	0	dBA	5243	0	dBA	13426	0	dBA
DewateringPump_02_q	Dewatering Pump--DeWPump	6242	0	dBA	3203	0	dBA	4958	0	dBA	13456	0	dBA
DewateringPump_01_bp	Dewatering Pump--DeWPump	4501	0	dBA	1706	0	dBA	6773	0	dBA	12639	0	dBA
DewateringPump_02_bp	Dewatering Pump--DeWPump	6016	0	dBA	3555	0	dBA	4648	0	dBA	12915	0	dBA
Loader_L1350_q	Quarry Source - Production Loader--L-1350 (23m3)	5317	0	dBA	2524	0	dBA	5713	0	dBA	12879	0	dBA
Loader_CAT966_bp	Borrow Source - Loader (FEL)--CAT 966	MS	0	dBA	MS	0	dBA	MS	0	dBA	MS	0	dBA
MechanicsTruck_q	Mechanics Truck--Mtruck	MS	0	dBA	MS	0	dBA	MS	0	dBA	MS	0	dBA
PrimaryDrill_D65_01_q	Primary Drill--140mm SmartRoc D65	6025	0	dBA	2986	0	dBA	5172	0	dBA	13349	0	dBA
PrimaryDrill_D65_02_q	Primary Drill--140mm SmartRoc D65	6192	0	dBA	3125	0	dBA	5035	0	dBA	13451	0	dBA
PickUp_F150_q	Pick-up--F150	MS	0	dBA	MS	0	dBA	MS	0	dBA	MS	0	dBA
PickUp_F150_q	Pick-up--F150	MS	0	dBA	MS	0	dBA	MS	0	dBA	MS	0	dBA
QuarryDieselGenSet_500kW_constr	DieselGen_500kW_Case--	5463	0	dBA	2397	0	dBA	5787	0	dBA	13110	0	dBA
RockCrusher_UD211_01_q	Rock Crusher--Sandvik UD211	6220	0	dBA	3069	0	dBA	5097	0	dBA	13526	0	dBA
RockCrusher_UD211_02_q	Rock Crusher--Sandvik UD211	5407	0	dBA	2602	0	dBA	5619	0	dBA	12921	0	dBA
ScreeningPlant_bp	Borrow Source - Screening Plant--	4575	0	dBA	1539	0	dBA	6876	0	dBA	12787	0	dBA
ScreeningPlant_bp	Borrow Source - Screening Plant--	6211	0	dBA	3054	0	dBA	5112	0	dBA	13526	0	dBA
BusPersonnel_Two_UG	Bus (60 seats)--BusPersonnel	MS	0	dBA	MS	0	dBA	MS	0	dBA	MS	0	dBA
VentilationFan_LP_HL_FAR1	VF_LP_HL_FAR1--LP Fresh Air Raise	5632	23	dBA	7289	18	dBA	5761	22	dBA	8489	15	dBA
VentilationFan_LP_HL_FAR1	VF_LP_HL_FAR1--LP Fresh Air Raise	5631	23	dBA	7289	18	dBA	5761	22	dBA	8489	15	dBA
VentilationFan_LP_RAR2	VF_LP_RAR2--LP Return Air Raise	5743	7	dBA	8129	1	dBA	6790	4	dBA	7355	3	dBA
VentilationFan_LP_RAR2	VF_LP_RAR2--LP Return Air Raise	5743	7	dBA	8129	1	dBA	6790	4	dBA	7355	3	dBA
R11 TMF PondDam to Overburden#3	Articulating Truck--40t	MS	0	dBA	MS	0	dBA	MS	0	dBA	MS	0	dBA
R12 Quarry1 to Overburden#6	Articulating Truck--40t	MS	0	dBA	MS	0	dBA	MS	0	dBA	MS	0	dBA
R13 Quarry2 to Overburden#6	Articulating Truck--40t	MS	0	dBA	MS	0	dBA	MS	0	dBA	MS	0	dBA
R14 BorrowSource#3 to Overburden#5	Articulating Truck--40t	MS	0	dBA	MS	0	dBA	MS	0	dBA	MS	0	dBA
R15 BorrowSource#3BS3B to Overburden#5	Articulating Truck--40t	MS	0	dBA	MS	0	dBA	MS	0	dBA	MS	0	dBA
R16 CWP#1 Dam to Overburden#1	Articulating Truck--40t	MS	0	dBA	MS	0	dBA	MS	0	dBA	MS	0	dBA
R28 TailingPipeline to Overburden#3	Articulating Truck--40t	MS	0	dBA	MS	0	dBA	MS	0	dBA	MS	0	dBA
R39 PAG Stockpile to Overburden#2	Articulating Truck--40t	MS	0	dBA	MS	0	dBA	MS	0	dBA	MS	0	dBA
R7 AEXPortal to AEX-NPAG	Articulating Truck--40t	MS	-4	dBA	MS	-9	dBA	MS	-9	dBA	MS	-14	dBA
R8 AEXPortal to AEX -PAG	Articulating Truck--40t	MS	2	dBA	MS	-2	dBA	MS	-2	dBA	MS	-8	dBA
R9 SouthDam to Overburden#3	Articulating Truck--40t	MS	0	dBA	MS	0	dBA	MS	0	dBA	MS	0	dBA
R17 BorrowSource#3 to NorthDam	Haul Truck--CAT 777F	MS	0	dBA	MS	0	dBA	MS	0	dBA	MS	0	dBA
R18 Quarry2 - Q1 to NorthDam	Haul Truck--CAT 777F	MS	0	dBA	MS	0	dBA	MS	0	dBA	MS	0	dBA
R19 BorrowSource#3 to SouthDam	Haul Truck--CAT 777F	MS	0	dBA	MS	0	dBA	MS	0	dBA	MS	0	dBA
R2 ViggoPit to NPAG Stockpile	Haul Truck--CAT 777F	MS	30	dBA	MS	25	dBA	MS	25	dBA	MS	24	dBA
R21 BorrowSource#3 to TMF PondDam	Haul Truck--CAT 777F	MS	0	dBA	MS	0	dBA	MS	0	dBA	MS	0	dBA
R20 Quarry1 to SouthDam	Haul Truck--CAT 777F	MS	0	dBA	MS	0	dBA	MS	0	dBA	MS	0	dBA
R22 Quarry1 to TMF PondDam	Haul Truck--CAT 777F	MS	0	dBA	MS	0	dBA	MS	0	dBA	MS	0	dBA
R23 Overburden#1 to CWP#1 Dam	Haul Truck--CAT 777F	MS	0	dBA	MS	0	dBA	MS	0	dBA	MS	0	dBA
R24 NPAG to CWP#1 Dam	Haul Truck--CAT 777F	MS	0	dBA	MS	0	dBA	MS	0	dBA	MS	0	dBA
R25 DiversionChan#2 to PAG Stockpile	Haul Truck--CAT 777F	MS	0	dBA	MS	0	dBA	MS	0	dBA	MS	0	dBA
R26 Overburden#1 to DiversionChan#2	Haul Truck--CAT 777F	MS	0	dBA	MS	0	dBA	MS	0	dBA	MS	0	dBA
R27 NPAG Stockpile to DiversionChan#2	Haul Truck--CAT 777F	MS	0	dBA	MS	0	dBA	MS	0	dBA	MS	0	dBA
R29 BorrowSource#1 to TailingsPipeline	Haul Truck--CAT 777F	MS	0	dBA	MS	0	dBA	MS	0	dBA	MS	0	dBA
R30 NPAG Stockpile to TailingsPipeline	Haul Truck--CAT 777F	MS	0	dBA	MS	0	dBA	MS	0	dBA	MS	0	dBA
R31 BorrowSource#1 to PrimaryCrusher	Haul Truck--CAT 777F	MS	0	dBA	MS	0	dBA	MS	0	dBA	MS	0	dBA
R32 NPAG Stockpile to PrimaryCrusher	Haul Truck--CAT 777F	MS	0	dBA	MS	0	dBA	MS	0	dBA	MS	0	dBA
R33 Overburden#2 to DixieCreekBerm	Haul Truck--CAT 777F	MS	0	dBA	MS	0	dBA	MS	0	dBA	MS	0	dBA

Notes on Table:
1. dBA = 1-hour energy equivalent sound (Leq (1-hr))
2. Height above local grade 3. MS = Mobile Source

Table A-1b: Construction Phase - Point of Reception Noise Impact

Evening/Nighttime - LAeq,1hr

Project: Great Bear Project
Location: Red Lake, ON

Source ID	Source Description	Residence/Cabin/Lodge/Camp POR1 POR1 POR1 Point of Reception ID: POR1			Residence/Cabin/Lodge/Camp POR4 POR4 POR4 Point of Reception ID: POR4			Residence/Cabin/Lodge/Camp POR5 POR5 POR5 Point of Reception ID: POR5			Residence/Cabin/Lodge/Camp POR6 POR6 POR6 Point of Reception ID: POR6		
		Point of Reception Description: Residence/Cabin/Lodge/Camp			Point of Reception Description: Residence/Cabin/Lodge/Camp			Point of Reception Description: Residence/Cabin/Lodge/Camp			Point of Reception Description: Residence/Cabin/Lodge/Camp		
		Point of reception coordinates			Point of reception coordinates			Point of reception coordinates			Point of reception coordinates		
		X	Y	Z [2]	X	Y	Z [2]	X	Y	Z [2]	X	Y	Z [2]
		456965	5639223	372	451915	5639044	357	451671	5630891	354	465139	5634939	350
		Point of Reception 1			Point of Reception 4			Point of Reception 5			Point of Reception 6		
		Distance [3] (m)	Sound Level at PoR	Units [1] (dBA)	Distance [3] (m)	Sound Level at PoR	Units [1] (dBA)	Distance [3] (m)	Sound Level at PoR	Units [1] (dBA)	Distance [3] (m)	Sound Level at PoR	Units [1] (dBA)
R35 HaulRoads to Overburden#2	Haul Truck--CAT 777F	MS	0	dBA	MS	0	dBA	MS	0	dBA	MS	0	dBA
R36 BorrowSource#1 to HaulRoads	Haul Truck--CAT 777F	MS	0	dBA	MS	0	dBA	MS	0	dBA	MS	0	dBA
R3 ViggoPit to LGO Stockpile - small	Haul Truck--CAT 785	MS	18	dBA	MS	13	dBA	MS	14	dBA	MS	12	dBA
R37 NPAG Stockpile to ROM Stockpile	Haul Truck--CAT 785	MS	0	dBA	MS	0	dBA	MS	0	dBA	MS	0	dBA
R38 BorrowSource#1 to InfrastructurePad	Haul Truck--CAT 785	MS	0	dBA	MS	0	dBA	MS	0	dBA	MS	0	dBA
R4 ViggoPit to LGO Stockpile - big	Haul Truck--CAT 785	MS	17	dBA	MS	12	dBA	MS	13	dBA	MS	10	dBA
R40 AEX_PAG to PAG	Haul Truck--CAT 785	MS	21	dBA	MS	15	dBA	MS	14	dBA	MS	10	dBA
R41 AEX_NPAG to NPAG	Haul Truck--CAT 785	MS	14	dBA	MS	9	dBA	MS	7	dBA	MS	3	dBA
R5 ViggoPit to ROM Stockpile	Haul Truck--CAT 785	MS	13	dBA	MS	10	dBA	MS	12	dBA	MS	7	dBA
R6 AEXPortal to ROM Stockpile	Haul Truck--CAT 785	MS	10	dBA	MS	10	dBA	MS	12	dBA	MS	1	dBA
HVAC_Admin_in	HVAC_inlet--	5009	-8	dBA	5503	-10	dBA	5039	-8	dBA	10030	-20	dBA
HVAC_Admin_out	HVAC_outlet--	5009	-10	dBA	5506	-12	dBA	5040	-10	dBA	10027	-23	dBA
HVAC_CAMP_A_in	HVAC_inlet--	5065	-8	dBA	5502	-9	dBA	4973	-8	dBA	10087	-20	dBA
HVAC_CAMP_A_out	HVAC_outlet--	5068	-10	dBA	5503	-12	dBA	4971	-10	dBA	10089	-23	dBA
HVAC_CAMP_B_in	HVAC_inlet--	5067	-8	dBA	5519	-9	dBA	4978	-8	dBA	10071	-20	dBA
HVAC_CAMP_B_out	HVAC_outlet--	5069	-10	dBA	5520	-12	dBA	4976	-10	dBA	10071	-23	dBA
HVAC_CAMP_C_in	HVAC_inlet--	5067	-8	dBA	5533	-10	dBA	4984	-8	dBA	10055	-20	dBA
HVAC_CAMP_C_out	HVAC_outlet--	5070	-10	dBA	5535	-12	dBA	4982	-10	dBA	10056	-23	dBA
HVAC_Kitchen_in	HVAC_inlet--	5046	-8	dBA	5541	-10	dBA	5013	-8	dBA	10026	-20	dBA
HVAC_Kitchen_out	HVAC_outlet--	5046	-10	dBA	5544	-12	dBA	5014	-10	dBA	10023	-23	dBA
HVAC_Storage_in	HVAC_inlet--	4924	-8	dBA	5499	-10	dBA	5136	-8	dBA	9951	-20	dBA
HVAC_Storage_out	HVAC_outlet--	4924	-10	dBA	5502	-12	dBA	5138	-11	dBA	9948	-23	dBA
HVAC_TreatPlant_in	HVAC_inlet--	4996	-8	dBA	5620	-10	dBA	5108	-8	dBA	9890	-20	dBA
HVAC_TREATPlant_out	HVAC_outlet--	4997	-10	dBA	5623	-12	dBA	5109	-10	dBA	9886	-23	dBA
HVAC_Truck_S_in	HVAC_inlet--	4930	-8	dBA	5568	-10	dBA	5161	-8	dBA	9881	-19	dBA
VentilationFan_AEX	VentFan_aex--UG AEX Portal Ventilation Fan	4937	18	dBA	5785	22	dBA	5270	24	dBA	9644	12	dBA

Notes on Table:
1. dBA = 1-hour energy equivalent sound (Leq (1-hr))
2. Height above local grade 3. MS = Mobile Source

Table A-1c: Emergency Test for Construction Phase - Noise Source Summary

Project: Great Bear Project
Location: Red Lake, ON

Source ID [1]	Source Description	Source Location NAD 83 / UTM zone 15N		Sound Power Level [3]	Sound Power Level Adjustment [3]	Source Location [4]	Sound Characteristics [5]	Noise Control Measures [6]
		Latitude [2]	Longitude [2]					
		(m)	(m)	(dBA)	(+dB)	(I or O)	(S,Q,I,B,T,C)	(S,A,B,L,E,O,U)
MillEmergencyPower_250k	DieselGen_250kW_Case--Diesel GenSet Casing	454995	5635038	97	0	O	S	E
MillEmergencyPower_250k	DieselGen_250kW_Case--Diesel GenSet Casing	454883	5635100	97	0	O	S	E
CampEmergencyPower_25(	DieselGen_250kW_Case--Diesel GenSet Casing	457285	5637353	97	0	O	S	E
CampEmergencyDieselGen	DieselGen_250kW_Case--Diesel GenSet Casing	457245	5637345	97	0	O	S	E
MillEmergencyDieselGenSe	DieselGen_250kW_Ex--Diesel GenSet Exhaust	454996	5635038	104	0	O	S	S
MillEmergencyDieselGenSe	DieselGen_250kW_Ex--Diesel GenSet Exhaust	454884	5635101	104	0	O	S	S
CampEmergencyDieselGen	DieselGen_250kW_Ex--Diesel GenSet Exhaust	457245	5637349	104	0	O	S	S
CampEmergencyDiesel_25(	DieselGen_250kW_Ex--Diesel GenSet Exhaust	457285	5637350	104	0	O	S	S
DieselGenSet_500kW_case	DieselGen_500kW_Case--	455161	5634661	97	0	O	S	E
DieselGenSet_500kW_ex	DieselGen_500kW_Ex--	455160	5634660	97	0	O	S	S
Emergency_NaturalGas_13(	NG_1300kW_all--Natural Gas Generator; for both case and exhaust	455152	5634636	110	0	O	S	E, S
Ambulance	Bus (60 seats)--BusPersonnel	454664	5634290	92	0	O	S	U
FireTruck	Pick-up--F150	454597	5634201	98	0	O	S	U

Notes on Table:

1. Wherever possible, the Source ID matches the identifiers used in the ESDM report.
2. Source centre of gravity coordinates used for Line and Area sources. Vertical area source coordinates not provided since corresponding area source coordinates are provided.
3. Sound Power Level of Source, in dBA, including sound characteristic adjustments per NPC-104.
4. Source Location: O = Outside of building, including the roof, I = Inside of building
5. Sound Characteristic, per NPC-104
   S = Steady
   Q = Quasi-Steady Impulsive
   I = Impulsive
   B = Buzzing
   T = Tonal
   C = Cyclic
6. Noise Control Measures Included
   S = Silencer/Muffler
   A = Acoustic lining, plenum
   B = Barrier
   L = Lagging
   E = acoustic enclosure
   O = Other
   U = uncontrolled

Table A-1d: Emergency Test for Construction Phase - Noise Source Summary

Daytime - LAeq,1hr

Project: Great Bear Project
Location: Red Lake, ON

Source ID	Source Description	Residence/Cabin/Lodge/Camp POR1 POR1 POR1 Point of Reception ID: POR1			Residence/Cabin/Lodge/Camp POR4 POR4 POR4 Point of Reception ID: POR4			Residence/Cabin/Lodge/Camp POR5 POR5 POR5 Point of Reception ID: POR5			Residence/Cabin/Lodge/Camp POR6 POR6 POR6 Point of Reception ID: POR6		
		Point of Reception 1			Point of Reception 4			Point of Reception 5			Point of Reception 6		
		Distance [3] (m)	Sound Level at PoR	Units [1] (dBA)	Distance [3] (m)	Sound Level at PoR	Units [1] (dBA)	Distance [3] (m)	Sound Level at PoR	Units [1] (dBA)	Distance [3] (m)	Sound Level at PoR	Units [1] (dBA)
Ambulance	Bus (60 seats)--BusPersonnel	MS	1	dBA	MS	-14	dBA	MS	-17	dBA	MS	-24	dBA
CampEmergencyPower_250kW	DieselGen_250kW_Case--Diesel GenSet Casing	1898	10	dBA	5630	-3	dBA	8560	-8	dBA	8217	-8	dBA
CampEmergencyDieselGenSet_250kw	DieselGen_250kW_Case--Diesel GenSet Casing	1899	10	dBA	5594	-3	dBA	8528	-8	dBA	8253	-8	dBA
CampEmergencyDieselGenSet_250kW_	DieselGen_250kW_Ex--Diesel GenSet Exhaust	1895	13	dBA	5593	-4	dBA	8532	-12	dBA	8254	-12	dBA
CampEmergencyDiesel_250kw_ex	DieselGen_250kW_Ex--Diesel GenSet Exhaust	1900	13	dBA	5631	-4	dBA	8558	-12	dBA	8216	-11	dBA
Emergency_NaturalGas_1300kW	NG_1300kW_all--Natural Gas Generator; for both case and exhaust	4932	6	dBA	5469	4	dBA	5113	6	dBA	9992	-3	dBA
FireTruck	Pick-up--F150	MS	7	dBA	MS	-8	dBA	MS	-12	dBA	MS	-19	dBA
MillEmergencyPower_250kW_casing	DieselGen_250kW_Case--Diesel GenSet Casing	4625	-1	dBA	5053	-2	dBA	5316	-3	dBA	10145	-11	dBA
MillEmergencyPower_250kW_casing	DieselGen_250kW_Case--Diesel GenSet Casing	4619	-1	dBA	4936	-2	dBA	5295	-3	dBA	10258	-11	dBA
MillEmergencyDieselGenSet_250kW_ex	DieselGen_250kW_Ex--Diesel GenSet Exhaust	4625	-1	dBA	5054	-3	dBA	5317	-4	dBA	10143	-15	dBA
MillEmergencyDieselGenSet_250kW_ex	DieselGen_250kW_Ex--Diesel GenSet Exhaust	4618	-1	dBA	4936	-2	dBA	5296	-3	dBA	10257	-16	dBA
DieselGenSet_500kW_case	DieselGen_500kW_Case--	4906	-5	dBA	5454	-7	dBA	5138	-5	dBA	9982	-15	dBA
DieselGenSet_500kW_ex	DieselGen_500kW_Ex--	4907	-7	dBA	5454	-11	dBA	5137	-8	dBA	9983	-21	dBA

Point of Reception Description: Residence/Cabin/Lodge/Camp

Point of reception coordinates													
X	Y	Z [2]	X	Y	Z [2]	X	Y	Z [2]	X	Y	Z [2]
456965	5639223	372	451915	5639044	357	451671	5630891	354	465139	5634939	350

Notes on Table:
1. dBA = 1-hour energy equivalent sound (Leq (1-hr))
2. Height above local grade 3. MS = Mobile Source

Table A-2: Peak Production Phase - Noise Source Summary

Project: Great Bear Project
Location: Red Lake, ON

Source ID [1]	Source Description	Source Location NAD 83 / UTM zone 15N		Sound Power Level [3]	Sound Power Level Adjustment [3]	Source Location [4]	Sound Characteristics [5]	Noise Control Measures [6]
		Latitude [2]	Longitude [2]					
		(m)	(m)	(dBA)	(+dB)	(I or O)	(S,Q,I,B,T,C)	(S,A,B,L,E,O,U)
DustCollectorApronFeeder_pr	Feeder generator Collector--Apron Feeder Dust Collector	454800	5634683	103	0	O	S	U
DustCollectorApronFeeder_pr	Feeder generator Collector--Apron Feeder Dust Collector	455020	5635029	103	0	O	S	U
DustCollectorApronFeeder_pr	Feeder generator Collector--Apron Feeder Dust Collector	454938	5634979	103	0	O	S	U
BlastLoaderCAT262_02_pp	Blasting Loader--CAT 262	457380	5633961	101	0	O	S	U
BlastLoaderCAT262_01_q	Blasting Loader--CAT 262	458701	5633363	101	0	O	S	U
BlastLoaderCAT262_01_pp	Blasting Loader--CAT 262	458701	5633363	101	0	O	S	U
ScreeningPlant_bp	Borrow Source - Screening Plant--	452638	5637545	116	0	O	S	U
ScreeningPlant_bp	Borrow Source - Screening Plant--	451654	5635995	116	0	O	S	U
CIPTailingsThickenerUnderflowPump	CIP Tailings Thickener Underflow Pump	454980	5635173	107	0	O	S	U
DustCollectorConeCrusher_pr	Dust Collector for Cone Crusher	454792	5634655	103	0	O	S	U
CrusherQJ341_PP	Crusher--Sandvik QJ341	456945	5634170	122	0	O	S	U
Desulphulrization_Agitator	Desulphurization AGITATOR, 185kW--Outside building	454997	5635259	102	0	O	S	U
Desulphulrization_Agitator	Desulphurization AGITATOR, 185kW--Outside building	454993	5635254	102	0	O	S	U
Desulphulrization_Agitator	Desulphurization AGITATOR, 185kW--Outside building	454990	5635248	102	0	O	S	U
DesuphurizationIBlower	Flotation generator Blower 1--Desulphurization Flotation Blower 1	454958	5635255	81	0	O	S	U
DesulphurizationFlotationPump	Flotation generator Blower 1--Desulphurization Flotation Blower 1	454996	5635256	81	0	O	S	U
Detox_blower	Detox Blower, 315kW--4000 cfm inside building	455058	5635158	83	0	O	S	U
DewateringPump_10_pp	Dewatering Pump--DeWPump	458856	5633472	104	0	O	S	U
DewateringPump_09_pp	Dewatering Pump--DeWPump	458120	5633398	104	0	O	S	U
DewateringPump_08_pp	Dewatering Pump--DeWPump	457073	5634548	104	0	O	S	U
DewateringPump_07_pp	Dewatering Pump--DeWPump	457122	5633847	104	0	O	S	U
DewateringPump_06_pp	Dewatering Pump--DeWPump	458718	5633387	104	0	O	S	U
DewateringPump_05_pp	Dewatering Pump--DeWPump	457452	5633554	104	0	O	S	U
DewateringPump_04_pp	Dewatering Pump--DeWPump	458453	5634387	104	0	O	S	U
DewateringPump_03_tf	Dewatering Pump--DeWPump	453137	5635335	104	0	O	S	U
DewateringPump_03_pp	Dewatering Pump--DeWPump	456362	5634569	104	0	O	S	U
DewateringPump_02_tf	Dewatering Pump--DeWPump	452105	5636241	104	0	O	S	U
DewateringPump_02_q	Dewatering Pump--DeWPump	451714	5635848	104	0	O	S	U
DewateringPump_02_pp	Dewatering Pump--DeWPump	457531	5633531	104	0	O	S	U
DewateringPump_02_bp	Dewatering Pump--DeWPump	452237	5635504	104	0	O	S	U
DewateringPump_01_tf	Dewatering Pump--DeWPump	453824	5635199	104	0	O	S	U
DewateringPump_01_q	Dewatering Pump--DeWPump	451767	5636132	104	0	O	S	U
DewateringPump_01_pp	Dewatering Pump--DeWPump	456267	5634497	104	0	O	S	U
DewateringPump_01_bp	Dewatering Pump--DeWPump	452778	5637573	104	0	O	S	U
TMF_DamDiesel_DieselGen_case	DieselGen_100kW_Case--Diesel GenSet Casing	453824	5635915	102	0	O	S	E
ExploStorage_DieselGen_100kW_case	DieselGen_100kW_Case--Diesel GenSet Casing	459209	5634334	102	0	O	S	E
ExploMagazine_DieselGen_100kW_case	DieselGen_100kW_Case--Diesel GenSet Casing	458277	5634505	102	0	O	S	E
DixieWaterPumpDieselGen_100kW_case	DieselGen_100kW_Case--Diesel GenSet Casing	455662	5633868	102	0	O	S	E
ExploStorageDieselGenSet_100kW_ex	DieselGen_100kW_Ex--Diesel GenSet Exhaust	459212	5634334	94	0	O	S	S
ExploMagazineDieselGenSet_100kW_ex	DieselGen_100kW_Ex--Diesel GenSet Exhaust	458276	5634502	94	0	O	S	S
DieselWaterPump_Dixie_100kW_ex	DieselGen_100kW_Ex--Diesel GenSet Exhaust	455666	5633868	94	0	O	S	S
100 kW DieselGen exhaust - TMF Dam	DieselGen_100kW_Ex--Diesel GenSet Exhaust	453822	5635913	94	0	O	S	S
QuarryDieselGenset_200kW_OP&UG	DieselGen_200kW_Case--Diesel GenSet Casing	452142	5636658	100	0	O	S	E
DieselGenset_200kW_Shaft	DieselGen_200kW_Case--Diesel GenSet Casing	456210	5634300	100	0	O	S	E

Table A-2: Peak Production Phase - Noise Source Summary

Project: Great Bear Project
Location: Red Lake, ON

Source ID [1]	Source Description	Source Location NAD 83 / UTM zone 15N		Sound Power Level [3]	Sound Power Level Adjustment [3]	Source Location [4]	Sound Characteristics [5]	Noise Control Measures [6]
		Latitude [2]	Longitude [2]					
		(m)	(m)	(dBA)	(+dB)	(I or O)	(S,Q,I,B,T,C)	(S,A,B,L,E,O,U)
DieselGenSet_200 kW casing - Chakuni River	DieselGen_200kW_Case--Diesel GenSet Casing	464942	5633802	100	0	O	S	E
DieselGenSet_200kW_Shaft_ex	DieselGen_200kW_Ex--Diesel GenSet Exhaust	456211	5634300	94	0	O	S	S
DieselGenSet_200 kW exhaust - Chakuni River	DieselGen_200kW_Ex--Diesel GenSet Exhaust	464929	5633802	94	0	O	S	S
DieselGenSet_200 kW exhaust - Quarry Source	DieselGen_200kW_Ex--Diesel GenSet Exhaust	452142	5636655	87	0	O	S	S
DieselGenSet_50 kW casing - Chakuni River	DieselGen_50kW_Case--Diesel GenSet Casing	463813	5633822	100	0	O	S	E
DieselGenSet_50kW exhaust - Chakuni River	DieselGen_50kW_Ex--Diesel GenSet Exhaust	463804	5633822	91	0	O	S	S
DiePump_05_pp	Diesel Pump--HL250M	458701	5633348	87	0	O	S	U
DiePump_04_pp	Diesel Pump--HL250M	457737	5633805	87	0	O	S	U
DiePump_03_pp	Diesel Pump--HL250M	458798	5633424	87	0	O	S	U
DiePump_02_pp	Diesel Pump--HL250M	456884	5633926	87	0	O	S	U
DiePump_01_pp	Diesel Pump--HL250M	457342	5633952	87	0	O	S	U
Exca_CAT336_03_tf	Excavator--CAT 336	452723	5637385	105	0	O	S	U
Exca_CAT336_02_tf	Excavator--CAT 336	452176	5636093	105	0	O	S	U
Exca_CAT336_01_tf	Excavator--CAT 336	454238	5636084	105	0	O	S	U
Excavator_CAT374_03_pp	Excavator--CAT 374	458756	5633360	107	0	O	S	U
Excavator_CAT374_02_pp	Excavator--CAT 374	457511	5633583	107	0	O	S	U
Excavator_CAT374_01_pp	Excavator--CAT 374	456762	5634590	107	0	O	S	U
FlotationTailingsThickerPump	Flotation Tailings Thickener Overflow Pump	454986	5635236	107	0	O	S	U
FlotationTailingsThickerPump	Flotation Tailings Thickener Feed Pump, 160kW--Outside building	454980	5635230	110	0	O	S	U
Fork_CATDP4055_05_pp	Forklift--Cat DP40-55(C)N3, 5.5t	455010	5635192	99	0	O	S	U
Fork_CATDP4055_04_pp	Forklift--Cat DP40-55(C)N3, 5.5t	457146	5634158	99	0	O	S	U
Fork_CATDP4055_03_pp	Forklift--Cat DP40-55(C)N3, 5.5t	455010	5635192	99	0	O	S	U
Fork_CATDP4055_02_pp	Forklift--Cat DP40-55(C)N3, 5.5t	455065	5635441	99	0	O	S	U
Fork_CATDP4055_01_pp	Forklift--Cat DP40-55(C)N3, 5.5t	455143	5635305	99	0	O	S	U
FrontLoaderSmallerCAT966_04_pp	Front End Loader (smaller)--CAT 966	458687	5633386	109	0	O	S	U
FrontLoaderSmallerCAT966_03_pp	Front End Loader (smaller)--CAT 966	458749	5633380	109	0	O	S	U
FrontLoaderSmallerCAT966_02_pp	Front End Loader (smaller)--CAT 966	457325	5633756	109	0	O	S	U
FrontLoaderSmallerCAT966_01_pp	Front End Loader (smaller)--CAT 966	457046	5633949	109	0	O	S	U
FrontLoaderCAT993_03_pp	Front End Loader--CAT993	456963	5634150	116	0	O	S	U
FrontLoaderCAT993_02_pp	Front End Loader--CAT993	457460	5634082	116	0	O	S	U
FrontLoaderCAT993_01_pp	Front End Loader--CAT993	458752	5633339	116	0	O	S	U
FurnaceDustCollector	FurnaceBag Dust Collector	455020	5635137	103	0	O	S	U
FusionMachine_03_pp	Fusion Machine--Ritmo Delta 250	456979	5634257	105	0	O	S	U
FusionMachine_02_pp	Fusion Machine--Ritmo Delta 250	458729	5633376	105	0	O	S	U
FusionMachine_01_pp	Fusion Machine--Ritmo Delta 250	457460	5633976	105	0	O	S	U
CrushFeeder_CAT777_idling	Haul Truck--CAT 777F	454807	5634653	121	0	O	S	U
HVAC_warmSB_in	HVAC_inlet--	455070	5635307	94	0	O	S	U
HVAC_warmSB_in	HVAC_inlet--	455098	5635352	94	0	O	S	U
HVAC_Truck_S_in	HVAC_inlet--	455264	5634595	94	0	O	S	U
HVAC_TreatPlant_in	HVAC_inlet--	455258	5634527	94	0	O	S	U
HVAC_TireRS_in	HVAC_inlet--	455024	5635524	94	0	O	S	U
HVAC_Storage_in	HVAC_inlet--	455193	5634629	94	0	O	S	U
HVAC_st_in	HVAC_inlet--	455077	5635417	94	0	O	S	U
HVAC_Mag_S_in	HVAC_inlet--	458548	5634692	94	0	O	S	U
HVAC_Mag_S_in	HVAC_inlet--	458550	5634690	94	0	O	S	U

Table A-2: Peak Production Phase - Noise Source Summary

Project: Great Bear Project
Location: Red Lake, ON

Source ID [1]	Source Description	Source Location NAD 83 / UTM zone 15N		Sound Power Level [3]	Sound Power Level Adjustment [3]	Source Location [4]	Sound Characteristics [5]	Noise Control Measures [6]
		Latitude [2]	Longitude [2]					
		(m)	(m)	(dBA)	(+dB)	(I or O)	(S,Q,I,B,T,C)	(S,A,B,L,E,O,U)
HVAC_Mag_S_in	HVAC_inlet--	458551	5634688	94	0	O	S	U
HVAC_Mag_S_in	HVAC_inlet--	458553	5634686	94	0	O	S	U
HVAC_Kitchen_in	HVAC_inlet--	455122	5634526	94	0	O	S	U
HVAC_Emul_in	HVAC_inlet--	459497	5634265	94	0	O	S	U
HVAC_Emul_in	HVAC_inlet--	459498	5634262	94	0	O	S	U
HVAC_Emul_in	HVAC_inlet--	459500	5634260	94	0	O	S	U
HVAC_Emul_in	HVAC_inlet--	459502	5634258	94	0	O	S	U
HVAC_cs_in	HVAC_inlet--	454994	5635377	94	0	O	S	U
HVAC_CAMP_in	HVAC_inlet--	457216	5637213	94	0	O	S	U
HVAC_CAMP_in	HVAC_inlet--	457215	5637232	94	0	O	S	U
HVAC_CAMP_in	HVAC_inlet--	457214	5637252	94	0	O	S	U
HVAC_CAMP_in	HVAC_inlet--	457213	5637270	94	0	O	S	U
HVAC_CAMP_in	HVAC_inlet--	457213	5637288	94	0	O	S	U
HVAC_CAMP_in	HVAC_inlet--	457213	5637307	94	0	O	S	U
HVAC_CAMP_in	HVAC_inlet--	457213	5637324	94	0	O	S	U
HVAC_CAMP_in	HVAC_inlet--	457213	5637372	94	0	O	S	U
HVAC_CAMP_in	HVAC_inlet--	457213	5637391	94	0	O	S	U
HVAC_CAMP_in	HVAC_inlet--	457272	5637391	94	0	O	S	U
HVAC_CAMP_in	HVAC_inlet--	457272	5637373	94	0	O	S	U
HVAC_CAMP_in	HVAC_inlet--	457285	5637325	94	0	O	S	U
HVAC_CAMP_in	HVAC_inlet--	457285	5637307	94	0	O	S	U
HVAC_CAMP_in	HVAC_inlet--	457286	5637287	94	0	O	S	U
HVAC_CAMP_in	HVAC_inlet--	457286	5637270	94	0	O	S	U
HVAC_CAMP_in	HVAC_inlet--	457286	5637252	94	0	O	S	U
HVAC_CAMP_in	HVAC_inlet--	457287	5637232	94	0	O	S	U
HVAC_CAMP_in	HVAC_inlet--	457287	5637213	94	0	O	S	U
HVAC_CAMP_in	HVAC_inlet--	454997	5635099	94	0	O	S	U
HVAC_CAMP_C_in	HVAC_inlet--	455093	5634514	94	0	O	S	U
HVAC_CAMP_B_in	HVAC_inlet--	455077	5634521	94	0	O	S	U
HVAC_CAMP_A_in	HVAC_inlet--	455060	5634530	94	0	O	S	U
HVAC_Admin_in	HVAC_inlet--	455116	5634568	94	0	O	S	U
HVAC_admin_B_in	HVAC_inlet--	455119	5635268	94	0	O	S	U
HVAC_admin_B_in	HVAC_inlet--	455151	5635412	94	0	O	S	U
HVAC_admin_B_in	HVAC_inlet--	455191	5635224	94	0	O	S	U
HVAC_warmSB_out	HVAC_outlet--	455065	5635312	89	0	O	S	U
HVAC_warmSB_out	HVAC_outlet--	455093	5635356	89	0	O	S	U
HVAC_TREATPlant_out	HVAC_outlet--	455261	5634525	89	0	O	S	U
HVAC_TireRS_out	HVAC_outlet--	455020	5635526	89	0	O	S	U
HVAC_Storage_out	HVAC_outlet--	455196	5634628	89	0	O	S	U
HVAC_st_out	HVAC_outlet--	455073	5635419	89	0	O	S	U
HVAC_Mag_S_out	HVAC_outlet--	458548	5634692	89	0	O	S	U
HVAC_Mag_S_out	HVAC_outlet--	458550	5634690	89	0	O	S	U
HVAC_Mag_S_out	HVAC_outlet--	458551	5634688	89	0	O	S	U
HVAC_Mag_S_out	HVAC_outlet--	458553	5634686	89	0	O	S	U
HVAC_Kitchen_out	HVAC_outlet--	455125	5634524	89	0	O	S	U

Table A-2: Peak Production Phase - Noise Source Summary

Project: Great Bear Project
Location: Red Lake, ON

Source ID [1]	Source Description	Source Location NAD 83 / UTM zone 15N		Sound Power Level [3]	Sound Power Level Adjustment [3]	Source Location [4]	Sound Characteristics [5]	Noise Control Measures [6]
		Latitude [2]	Longitude [2]					
		(m)	(m)	(dBA)	(+dB)	(I or O)	(S,Q,I,B,T,C)	(S,A,B,L,E,O,U)
HVAC_Emul_out	HVAC_outlet--	459497	5634265	89	0	O	S	U
HVAC_Emul_out	HVAC_outlet--	459498	5634262	89	0	O	S	U
HVAC_Emul_out	HVAC_outlet--	459500	5634260	89	0	O	S	U
HVAC_Emul_out	HVAC_outlet--	459502	5634259	89	0	O	S	U
HVAC_cs_out	HVAC_outlet--	454989	5635379	89	0	O	S	U
HVAC_coreS_out	HVAC_outlet--	455189	5635222	89	0	O	S	U
HVAC_CAMP_out	HVAC_outlet--	457223	5637213	89	0	O	S	U
HVAC_CAMP_out	HVAC_outlet--	457223	5637233	89	0	O	S	U
HVAC_CAMP_out	HVAC_outlet--	457223	5637250	89	0	O	S	U
HVAC_CAMP_out	HVAC_outlet--	457223	5637270	89	0	O	S	U
HVAC_CAMP_out	HVAC_outlet--	457223	5637287	89	0	O	S	U
HVAC_CAMP_out	HVAC_outlet--	457223	5637305	89	0	O	S	U
HVAC_CAMP_out	HVAC_outlet--	457223	5637325	89	0	O	S	U
HVAC_CAMP_out	HVAC_outlet--	457223	5637371	89	0	O	S	U
HVAC_CAMP_out	HVAC_outlet--	457223	5637391	89	0	O	S	U
HVAC_CAMP_out	HVAC_outlet--	457279	5637392	89	0	O	S	U
HVAC_CAMP_out	HVAC_outlet--	457278	5637374	89	0	O	S	U
HVAC_CAMP_out	HVAC_outlet--	457292	5637326	89	0	O	S	U
HVAC_CAMP_out	HVAC_outlet--	457292	5637308	89	0	O	S	U
HVAC_CAMP_out	HVAC_outlet--	457292	5637288	89	0	O	S	U
HVAC_CAMP_out	HVAC_outlet--	457292	5637271	89	0	O	S	U
HVAC_CAMP_out	HVAC_outlet--	457292	5637252	89	0	O	S	U
HVAC_CAMP_out	HVAC_outlet--	457293	5637233	89	0	O	S	U
HVAC_CAMP_out	HVAC_outlet--	457294	5637214	89	0	O	S	U
HVAC_CAMP_out	HVAC_outlet--	455004	5635099	89	0	O	S	U
HVAC_CAMP_C_out	HVAC_outlet--	455092	5634512	89	0	O	S	U
HVAC_CAMP_B_out	HVAC_outlet--	455076	5634519	89	0	O	S	U
HVAC_CAMP_A_out	HVAC_outlet--	455059	5634527	89	0	O	S	U
HVAC_Admin_out	HVAC_outlet--	455119	5634566	89	0	O	S	U
HVAC_admin_out	HVAC_outlet--	455116	5635270	89	0	O	S	U
HVAC_admin_out	HVAC_outlet--	455148	5635414	89	0	O	S	U
DustCollectorJawCrusher_pr	Dust Collector for Jaw Crusher feeder	454822	5634661	103	0	O	S	U
LeachBlower_280kW	Leach Blower, 280kW--6000 cfm inside building	455055	5635170	82	0	O	S	U
LeachTankAgitator_6	Leach Tank Agitator, 150kW--Outside building	455045	5635187	102	0	O	S	U
LeachTankAgitator_5	Leach Tank Agitator, 150kW--Outside building	455024	5635187	102	0	O	S	U
LeachTankAgitator_4	Leach Tank Agitator, 150kW--Outside building	455035	5635170	102	0	O	S	U
LeachTankAgitator_3	Leach Tank Agitator, 150kW--Outside building	455014	5635170	102	0	O	S	U
LeachTankAgitator_2	Leach Tank Agitator, 150kW--Outside building	455025	5635152	102	0	O	S	U
LeachTankAgitator_1	Leach Tank Agitator, 150kW--Outside building	455004	5635152	102	0	O	S	U
DustCollectorLimeSilo	Lime Silo Dust Collector	455069	5635123	103	0	O	S	U
MobileCrane150t_pp	150t Mobile Crane--MobCrane150t	455074	5635142	108	0	O	S	U
MobileCrane50t_02_pp	50t Mobile Crane--Tadano GR-500XL	455052	5635163	112	0	O	S	U
MobileCrane50t_01_pp	50t Mobile Crane--Tadano GR-500XL	454983	5635192	112	0	O	S	U
5 MW NaturalGasPower Casing - Power Plant	5 MW Natural Gas-Fired Reciprocating Engine Casing	457003	5636634	117	0	O	S	E
5 MW NaturalGasPower Casing - Power Plant	5 MW Natural Gas-Fired Reciprocating Engine Casing	457007	5636629	117	0	O	S	E

Table A-2: Peak Production Phase - Noise Source Summary

Project: Great Bear Project
Location: Red Lake, ON

Source ID [1]	Source Description	Source Location NAD 83 / UTM zone 15N		Sound Power Level [3]	Sound Power Level Adjustment [3]	Source Location [4]	Sound Characteristics [5]	Noise Control Measures [6]
		Latitude [2]	Longitude [2]					
		(m)	(m)	(dBA)	(+dB)	(I or O)	(S,Q,I,B,T,C)	(S,A,B,L,E,O,U)
5 MW NaturalGasPower Casing - Power Plant	5 MW Natural Gas-Fired Reciprocating Engine Casing	457012	5636622	117	0	O	S	E
5 MW NaturalGasPower Casing - Power Plant	5 MW Natural Gas-Fired Reciprocating Engine Casing	457016	5636616	117	0	O	S	E
5 MW NaturalGasPower Casing - Power Plant	5 MW Natural Gas-Fired Reciprocating Engine Casing	457021	5636610	117	0	O	S	E
5 MW NaturalGasPower Casing - Power Plant	5 MW Natural Gas-Fired Reciprocating Engine Casing	457025	5636604	117	0	O	S	E
5 MW NaturalGasPower Casing - Power Plant	5 MW Natural Gas-Fired Reciprocating Engine Casing	457028	5636598	117	0	O	S	E
5 MW NaturalGasPower Casing - Power Plant	5 MW Natural Gas-Fired Reciprocating Engine Casing	457032	5636593	117	0	O	S	E
5 MW NaturalGasPower Casing - Power Plant	5 MW Natural Gas-Fired Reciprocating Engine Casing	457035	5636590	117	0	O	S	E
5 MW Gen Exhaust - Power Plant	5 MW Natural Gas-Fired Reciprocating Engine outlet-- Exhaust	457005	5636636	104	0	O	S	S
5 MW Gen Exhaust - Power Plant	5 MW Natural Gas-Fired Reciprocating Engine outlet-- Exhaust	457009	5636630	104	0	O	S	S
5 MW Gen Exhaust - Power Plant	5 MW Natural Gas-Fired Reciprocating Engine outlet-- Exhaust	457014	5636624	104	0	O	S	S
5 MW Gen Exhaust - Power Plant	5 MW Natural Gas-Fired Reciprocating Engine outlet-- Exhaust	457018	5636617	104	0	O	S	S
5 MW Gen Exhaust - Power Plant	5 MW Natural Gas-Fired Reciprocating Engine outlet-- Exhaust	457023	5636611	104	0	O	S	S
5 MW Gen Exhaust - Power Plant	5 MW Natural Gas-Fired Reciprocating Engine outlet-- Exhaust	457027	5636605	104	0	O	S	S
5 MW Gen Exhaust - Power Plant	5 MW Natural Gas-Fired Reciprocating Engine outlet-- Exhaust	457030	5636599	104	0	O	S	S
5 MW Gen Exhaust - Power Plant	5 MW Natural Gas-Fired Reciprocating Engine outlet-- Exhaust	457034	5636594	104	0	O	S	S
5 MW Gen Exhaust - Power Plant	5 MW Natural Gas-Fired Reciprocating Engine outlet-- Exhaust	457037	5636591	104	0	O	S	S
OreControlDrill_05_pp	Ore Control Drill--Explorac E100	457496	5633760	118	0	O	S	U
OreControlDrill_04_pp	Ore Control Drill--Explorac E100	457496	5633760	118	0	O	S	U
OreControlDrill_03_pp	Ore Control Drill--Explorac E100	457496	5633760	118	0	O	S	U
OreControlDrill_02_pp	Ore Control Drill--Explorac E100	458661	5633377	118	0	O	S	U
OreControlDrill_01_pp	Ore Control Drill--Explorac E100	457235	5634161	118	0	O	S	U
PastePlantDustCollector	Paste Plant Dust Collector	456264	5633996	103	0	O	S	U
PreLeachThickenerPump	Horizontal centrifugal slurry--Pre-leach Thickener Underflow Pump 1	455051	5635134	110	0	O	S	U
PrimaryDrill_D65_03_pp	Primary Drill--140mm SmartRoc D65	458641	5633360	125	0	O	S	U
PrimaryDrill_D65_02_q	Primary Drill--140mm SmartRoc D65	451725	5635925	125	0	O	S	U
PrimaryDrill_D65_02_pp	Primary Drill--140mm SmartRoc D65	457488	5633877	125	0	O	S	U
PrimaryDrill_D65_01_q	Primary Drill--140mm SmartRoc D65	451837	5636060	125	0	O	S	U
PrimaryDrill_D65_01_pp	Primary Drill--140mm SmartRoc D65	457200	5634068	125	0	O	S	U
ProcessWaterPump_250kW	Process Water Pump, 250kW--Inside building	455029	5635135	112	0	O	S	U
ProductionDrill_PV235_06_pp	Production Drill--Epiroc Pit Viper PV235	456993	5634166	118	0	O	S	U
ProductionDrill_PV235_05_pp	Production Drill--Epiroc Pit Viper PV235	457607	5633873	118	0	O	S	U
ProductionDrill_PV235_04_pp	Production Drill--Epiroc Pit Viper PV235	456899	5634192	118	0	O	S	U
ProductionDrill_PV235_03_pp	Production Drill--Epiroc Pit Viper PV235	458632	5633398	118	0	O	S	U
ProductionDrill_PV235_02_pp	Production Drill--Epiroc Pit Viper PV235	457405	5633908	118	0	O	S	U
ProductionDrill_PV235_01_pp	Production Drill--Epiroc Pit Viper PV235	457105	5634108	118	0	O	S	U
RockCrusher_UD211_01_q	Rock Crusher--Sandvik UD211	451654	5635987	121	0	O	S	U
DustCollectorConveyourSF	Sacrificial Conveyor to Stockpile Feed Conveyor Dust Collector	454893	5634907	103	0	O	S	U
Shovel_10m3_pp	Shovel 10.0 m3--CAT 6015	458633	5633380	114	0	O	S	U
Shovel_16m3_pp	Shovel 16.5 m3--CAT 6030	457031	5634167	117	0	O	S	U
Shovel_16m3_pp	Shovel 16.5 m3--CAT 6030	457567	5633948	117	0	O	S	U
Skidder_JD640_02_tf	Skidder--JD 640L	454129	5635973	114	0	O	S	U
Skidder_JD640_01_tf	Skidder--JD 640L	453607	5635623	114	0	O	S	U
SkidSteer_CAT650_02_pp	Skid Steer--Bobcat S650	455030	5635197	101	0	O	S	U
SkidSteer_CAT650_01_pp	Skid Steer--Bobcat S650	454959	5635414	101	0	O	S	U
SnapAirBlower_PastePlant	Paste Plant (Backfill) Outdoors--Snap Air Blower 1	456280	5633988	68	0	O	S	U

Table A-2: Peak Production Phase - Noise Source Summary

Project: Great Bear Project
Location: Red Lake, ON

Source ID [1]	Source Description	Source Location NAD 83 / UTM zone 15N		Sound Power Level [3]	Sound Power Level Adjustment [3]	Source Location [4]	Sound Characteristics [5]	Noise Control Measures [6]
		Latitude [2]	Longitude [2]					
		(m)	(m)	(dBA)	(+dB)	(I or O)	(S,Q,I,B,T,C)	(S,A,B,L,E,O,U)
Tailings_to_PastePump	Tailings to Paste Plant Pump 1	454971	5635225	107	0	O	S	U
Tailings_to_PastePump	Tailings to Paste Plant Pump 1	454967	5635218	107	0	O	S	U
TailingsPump	Tailings Pump	454966	5635181	108	0	O	S	U
TailingsStorageTankAgitator	Paste Plant (Backfill) Outdoors--Tailings Storage Tank Agitator	456324	5633960	102	0	O	S	U
CyaniteTankAgitator	Cyanide Destruction Tank 1 Agitator	455002	5635190	102	0	O	S	U
CyaniteTankAgitator	Cyanide Destruction Tank 1 Agitator	454992	5635195	102	0	O	S	U
ThickenerRecirculatingPump	Paste Plant (Backfill) Outdoors--Thickener Recirculation Pump	456309	5633969	100	0	O	S	U
ThickerUFPumpPastePlant	Paste Plant (Backfill) Outdoors--Thickener UF Pump	456294	5633978	100	0	O	S	U
TireManipulator_WA500_pp	Tire Manipulator--WA-500-7	455046	5635507	109	0	O	S	U
TLB_CAT422_02_pp	TLB--Cat 422F2	456631	5636215	99	0	O	S	U
TLB_CAT422_01_pp	TLB--Cat 422F2	456528	5636114	99	0	O	S	U
Transformer_600kVA	600 kVA--Transformer	459509	5634259	66	0	O	S	U
VentilationFan_AEX	VentFan_aex--UG AEX Portal Ventilation Fan	455504	5634507	129	0	O	S	U
VentilationFan_LP_HL_FAR1	VF_LP_HL_FAR1--LP Fresh Air Raise	456757	5633595	129	0	O	S	U
VentilationFan_LP_HL_FAR1	VF_LP_HL_FAR1--LP Fresh Air Raise	456757	5633595	129	0	O	S	U
VentilationFan_LP_RAR1	VF_LP_RAR1--LP Return Air Raise	456412	5634335	116	0	O	S	O
VentilationFan_LP_RAR1	VF_LP_RAR1--LP Return Air Raise	456411	5634336	116	0	O	S	O
VentilationFan_LP_RAR2	VF_LP_RAR2--LP Return Air Raise	457914	5633559	114	0	O	S	O
VentilationFan_LP_RAR2	VF_LP_RAR2--LP Return Air Raise	457914	5633559	114	0	O	S	O
VentilationFan_VIG_FAR	VF_VIG_FAR--Viggo Fresh Air Raise	458303	5633318	110	0	O	S	U
VentilationFan_VIG_FAR	VF_VIG_FAR--Viggo Fresh Air Raise	458303	5633318	110	0	O	S	U
VentilationFan_VIG_RAR	VF_VIG_RAR--Viggo Return Air Raise	458286	5633457	105	0	O	S	O
VentilationFan_VIG_RAR	VF_VIG_RAR--Viggo Return Air Raise	458286	5633457	105	0	O	S	O
WheelLoader_CAT844_02_pp	Wheel Loader--CAT 844 RTD	458732	5633347	109	0	O	S	U
WheelLoader_CAT844_01_pp	Wheel Loader--CAT 844 RTD	457234	5634087	109	0	O	S	U
UOR30_40t_PAG_to_OVB1	Articulating Truck--40t	457597	5635266	94	0	O	S	U
UOR29 TMF Facilty to WestDam	Articulating Truck--40t	453238	5635307	94	0	O	S	U
UOR28 TMF Facility to SouthDam	Articulating Truck--40t	454134	5635914	97	0	O	S	U
UOR27 TMF Facility to NorthDam	Articulating Truck--40t	453656	5636733	98	0	O	S	U
UOR15 WestDam to Overburden#5	Articulating Truck--40t	452290	5635725	82	0	O	S	U
UOR14 SouthDam-spilleway to SouthDam	Articulating Truck--40t	453808	5635177	103	0	O	S	U
UOR13 SouthDam to Overburden#3	Articulating Truck--40t	454259	5636114	89	0	O	S	U
UOR12 NorthDam to Overburden#4	Articulating Truck--40t	452854	5637401	84	0	O	S	U
BlastTruck_F350_q	Blasters Truck--F350	452759	5635113	99	0	O	S	U
BlasterTruck_02_pp	Blasters Truck--F350	436262	5673265	89	0	O	S	U
BlasterTruck_01_pp	Blasters Truck--F350	457730	5634086	89	0	O	S	U
Loader_CAT966_bp	Borrow Source - Loader (FEL)--CAT 966	450503	5638368	96	0	O	S	U
BusPersonnel_03_pp	Bus (60 seats)--BusPersonnel	456054	5635019	99	0	O	S	U
BusPersonnel_02_pp	Bus (60 seats)--BusPersonnel	457104	5634295	91	0	O	S	U
BusPersonnel_01_pp	Bus (60 seats)--BusPersonnel	457020	5635546	101	0	O	S	U
ContainerTrailerTruck_pp	Container Trailer Truck--ContTT	455823	5636170	95	0	O	S	U
ArticulatedTruckCAT740_01_tf	EJ Articulated Trucks--CAT 740	454377	5636095	112	0	O	S	U
FlatBedBoomTruck_tf	Flat Bed or Boom Truck --	454134	5635899	98	0	O	S	U
FlatDeckTruck_pp	Flat Deck Truck--FlatDT	455814	5636180	103	0	O	S	U
FuelTankerTruck_CAT740_01_pp	Fuel Tanker Truck (30,000 L)--CAT 740	457004	5635540	96	0	O	S	U

Table A-2: Peak Production Phase - Noise Source Summary

Project: Great Bear Project
Location: Red Lake, ON

Source ID [1]	Source Description	Source Location NAD 83 / UTM zone 15N		Sound Power Level [3]	Sound Power Level Adjustment [3]	Source Location [4]	Sound Characteristics [5]	Noise Control Measures [6]
		Latitude [2]	Longitude [2]					
		(m)	(m)	(dBA)	(+dB)	(I or O)	(S,Q,I,B,T,C)	(S,A,B,L,E,O,U)
FuelTankerTruck_02_pp	Fuel Tanker Truck (30,000 L)--CAT 740	457115	5634293	86	0	O	S	U
UOR26 NPAG Stockpile to Road Base	Haul Truck--CAT 777F	457027	5636088	114	0	O	S	U
UOR25 NPAG Stockpile to LP Central	Haul Truck--CAT 777F	457974	5633552	117	0	O	S	U
UOR24 NPAG Stockpile to WestDam	Haul Truck--CAT 777F	453425	5635358	119	0	O	S	U
UOR23 BorrowSource#3 to WestDam	Haul Truck--CAT 777F	452843	5637946	106	0	O	S	U
UOR22 TMF Facility to WestDam	Haul Truck--CAT 777F	453252	5635278	109	0	O	S	U
UOR21 NPAG Stockpile to SouthDam	Haul Truck--CAT 777F	455837	5635194	125	0	O	S	U
UOR20 BorrowSource#3 to SouthDam	Haul Truck--CAT 777F	453650	5636792	110	0	O	S	U
UOR19 TMF Facility to SouthDam	Haul Truck--CAT 777F	454190	5635954	110	0	O	S	U
UOR18 NPAGStockpile to NorthDam	Haul Truck--CAT 777F	458722	5632667	120	0	O	S	U
UOR17 BorrowSource#3 to NorthDam	Haul Truck--CAT 777F	452719	5637601	104	0	O	S	U
UOR16 TMF Facility to NorthDam	Haul Truck--CAT 777F	453682	5636734	112	0	O	S	U
UOR9 AEXPortal to Crusher	Haul Truck--CAT 785	455334	5634402	117	0	O	S	U
UOR8 LGO Stockpile East to Crusher	Haul Truck--CAT 785	455661	5634628	105	0	O	S	U
UOR7 LGO Stockpile West to Crusher	Haul Truck--CAT 785	455574	5634646	106	0	O	S	U
UOR6 LP Central to LGO Stockpile big	Haul Truck--CAT 785	457500	5634170	119	0	O	S	U
UOR5 LP Central to LGO Stockpile small	Haul Truck--CAT 785	457237	5634303	116	0	O	S	U
UOR4 LP Central to Crusher	Haul Truck--CAT 785	457595	5634258	123	0	O	S	U
UOR3 LP Central to NPAG Stockpile	Haul Truck--CAT 785	457933	5633640	124	0	O	S	U
UOR2 LP Central to PAG Stockpile	Haul Truck--CAT 785	457558	5634275	132	0	O	S	U
UOR11 AEXPortal to NPAG Stockpile	Haul Truck--CAT 785	455890	5634501	109	0	O	S	U
UOR10 AEXPortal to PAG Stockpile	Haul Truck--CAT 785	455746	5634268	113	0	O	S	U
UOR1 LP Central to Overburden#1	Haul Truck--CAT 785	457650	5633754	123	0	O	S	U
HighCubeTruck_pp	High Cube Truck--Ford F-650 SD DIESEL	455823	5636163	95	0	O	S	U
LowboyNTractor_75t_pp	Lowboy and Tractor--75ton - 100ton	456135	5636429	96	0	O	S	U
MechanicsTruck_05_pp	Mechanics Truck--Mtruck	455432	5634388	92	0	O	S	U
MechanicsTruck_04_pp	Mechanics Truck--Mtruck	457572	5634979	87	0	O	S	U
MechanicsTruck_03_pp	Mechanics Truck--Mtruck	455822	5635553	89	0	O	S	U
MechanicsTruck_02_pp	Mechanics Truck--Mtruck	457114	5634296	85	0	O	S	U
MechanicsTruck_01_pp	Mechanics Truck--Mtruck	456929	5634641	94	0	O	S	U
PickUp_F150_q	Pick-up--F150	454210	5635839	95	0	O	S	U
PickUp_F150_03_pp	Pick-up--F150	456554	5635095	109	0	O	S	U
PickUp_F150_02_pp	Pick-up--F150	453976	5636341	109	0	O	S	U
PickUp_F150_01_pp	Pick-up--F150	457012	5635558	107	0	O	S	U
LightDutyPickUp_tf	Pick-up--F150	452684	5637125	95	0	O	S	U
PortableWaterTruck_pp	Portable Water Truck--PoWT	455906	5635929	96	0	O	S	U
RoadGrader_CAT16_03_pp	Road Grader--CAT 16	454004	5636605	104	0	O	S	U
RoadGrader_CAT16_02_pp	Road Grader--CAT 16	453271	5635828	110	0	O	S	U
RoadGrader_CAT16_01_pp	Road Grader--CAT 16	457177	5635876	110	0	O	S	U
SewageCollectionTruck_pp	Sewage Collection Truck--SewColTruck	454959	5634905	94	0	O	S	U
SnowWaterTruck_02_pp	Snow Plow/Water Truck--T880	457153	5634515	100	0	O	S	U
SnowWaterTruck_01_pp	Snow Plow/Water Truck--T880	456699	5635105	103	0	O	S	U
ProductionConveyor	Stockpile Conveyor--w=1.35m; l=183m; 28.1m rise	454815	5634690	114	0	O	S	U
ProductionConveyor	Stockpile Conveyor--w=1.35m; l=183m; 28.1m rise	454996	5635057	110	0	O	S	U
ProductionConveyor	Stockpile Conveyor--w=1.35m; l=183m; 28.1m rise	455002	5635082	110	0	O	S	U

Table A-2: Peak Production Phase - Noise Source Summary

Project: Great Bear Project
Location: Red Lake, ON

Source ID [1]	Source Description	Source Location NAD 83 / UTM zone 15N		Sound Power Level [3]	Sound Power Level Adjustment [3]	Source Location [4]	Sound Characteristics [5]	Noise Control Measures [6]
		Latitude [2]	Longitude [2]					
		(m)	(m)	(dBA)	(+dB)	(I or O)	(S,Q,I,B,T,C)	(S,A,B,L,E,O,U)
CRF_conveyor	Stockpile Conveyor--w=1.35m; l=183m; 28.1m rise	455795	5634488	104	0	O	S	U
TandemWaterTruck_2500_pr	Tadem Water Trucks-- 2500 gls	454099	5635105	107	0	O	S	U
UG_BusPersonnel	UG Bus passenger	455225	5634563	92	0	O	S	U
BusPersonnel_04_pp	UG Bus passenger	457575	5634979	91	0	O	S	U
UG_CRF_Truck	UG CRF Truck	454483	5634956	101	0	O	S	U
UG_EmulsionDevCarrier	UG Emulsion Dev-carrier	455320	5634493	100	0	O	S	U
UG_EmulsionProdCarrier	UG Emulsion Prod-carrier	455252	5634499	94	0	O	S	U
UG_FuelNLube	UG Boom Truck	455271	5634560	85	0	O	S	U
UG_Grader	UG Grader	455268	5634552	97	0	O	S	U
UG_JeepPersonnel	UG Jeep personnel carrier	455179	5634597	95	0	O	S	U
UG_JeepVehicle	UG Jeep maintenance vehicle	455270	5634587	84	0	O	S	U
UG_MobileCrane	UG Terrain mobile crane	455270	5634588	80	0	O	S	U
UG_RoughTerrainFork	UG Rough Terrain Forklift	455273	5634561	91	0	O	S	U
UG_Scissor	UG Scissor lift	455269	5634586	99	0	O	S	U
UG_Shotcrete	UG Shotcrete Sprayer	454830	5634829	100	0	O	S	U
UG_TractorForkBackhoe	UG Tractor with Fork and Backhoe	455271	5634587	95	0	O	S	U
UG_TransMixer	UG Transmixer	454481	5634957	97	0	O	S	U
UG_WaterSpryer	UG Water spryer w/carrier	455267	5634588	86	0	O	S	U
UG_Truck_50t	UG Truck 50t	455362	5634630	98	0	O	S	U
UG_BoomTruck	UG Boom Truck	455264	5634544	98	0	O	S	U
WaterTruck_CAT740_01_pp	Water Truck (30,000 L)--CAT 740	457492	5634132	94	0	O	S	U
WaterTruck_02_pp	Water Truck (30,000 L)--CAT 740	455194	5634983	88	0	O	S	U
BackHoe_330_bp	Backhoe--330	452336	5638238	104	0	O	S	U
CFR_Plant	CFR Plant Area	455800	5634485	117	0	O	S	U
Compactor_CAT64B_01_tf	Compactor--CAT CS64B	452496	5637260	108	0	O	S	U
Compactor_CAT64B_02_tf	Compactor--CAT CS64B	452187	5636018	108	0	O	S	U
Compactor_CAT64B_03_tf	Compactor--CAT CS64B	454098	5635423	108	0	O	S	U
Dozer_CAT_D10_02_pp	Dozer - D10--CAT D10	457064	5635833	119	0	O	S	U
Dozer_CAT_D10_03_pp	Dozer - D10--CAT D10	455691	5635092	116	0	O	S	U
Dozer_CAT_D10_pp	Dozer - D10--CAT D10	456166	5635148	119	0	O	S	U
Dozer_CAT_D6_01_pp	Dozer - D6--CAT D6	458103	5635337	113	0	O	S	U
Dozer_CAT_D6_01_tf	Dozer - D6--CAT D6	454276	5637129	116	0	O	S	U
Dozer_CAT_D6_02_pp	Dozer - D6--CAT D6	457936	5635113	113	0	O	S	U
Dozer_CAT_D6_02_tf	Dozer - D6--CAT D6	454882	5636343	113	0	O	S	U
Dozer_CAT_D6_03_pp	Dozer - D6--CAT D6	456070	5635906	113	0	O	S	U
Dozer_CAT_D6_bp	Dozer - D6--CAT D6	452794	5637619	113	0	O	S	U
Dozer_CAT_D8_pit	Dozer--CAT D8	456975	5634179	120	0	O	S	U
Dozer_CAT_D8_q	Dozer--CAT D8	451781	5636006	117	0	O	S	U
Dozer_CAT_D8_tf	Dozer--CAT D8	453671	5635741	120	0	O	S	U
Excavator_CAT_D6_01_tf	EX Dozer--CAT D6	452377	5635465	113	0	O	S	U
Excavator_CAT_D6_02_tf	EX Dozer--CAT D6	453714	5637521	113	0	O	S	U
IntegratedToolCarrier_pp	Integrated Tool Carrier--WA200-7	456561	5636225	104	0	O	S	U
PastePlantFacade_Top	Paste Plant top--	456309	5634004	108	0	O	S	U
Primary Crusher_Top	Primary Crusher Top--	454809	5634673	117	0	O	S	U
ProcessPlant_top	Proces Plant Input Top--	454989	5635119	108	0	O	S	U

Table A-2: Peak Production Phase - Noise Source Summary

Project: Great Bear Project
Location: Red Lake, ON

Source ID [1]	Source Description	Source Location NAD 83 / UTM zone 15N		Sound Power Level [3]	Sound Power Level Adjustment [3]	Source Location [4]	Sound Characteristics [5]	Noise Control Measures [6]
		Latitude [2]	Longitude [2]					
		(m)	(m)	(dBA)	(+dB)	(I or O)	(S,Q,I,B,T,C)	(S,A,B,L,E,O,U)
Loader_L1350_q	Quarry Source - Production Loader--L-1350 (23m3)	452363	5636561	120	0	O	S	U
BackHoe_PC1250_q	Quarry Source - Production Backhoe--PC1250 (6.7m3)	452247	5636838	110	0	O	S	U
Shovel_12m3_pp	Shovel 12.0 m3--CAT 6020	457481	5633945	119	0	O	S	U
SubstationArea	Substation Area cumulative	457053	5636648	97	0	O	S	U
TransferTowerPebbleCrusher_Top	Transfer Tower Pebble Crusher Top	454946	5634993	116	0	O	S	U
PastePlant_F1	Paste Plant facade 1--	-	-	106	0	O	S	U
PastePlant_F2	Paste Plant facade 2--	-	-	107	0	O	S	U
PastePlant_F3	Paste Plant facade 3--	-	-	106	0	O	S	U
PastePlant_F4	Paste Plant facade 4--	-	-	107	0	O	S	U
PrimaryCrusher_F1	Primary Crusher facade 1--	-	-	120	0	O	S	U
PrimaryCrusher_F2	Primary Crusher facade 2--	-	-	117	0	O	S	U
PrimaryCrusher_F3	Primary Crusher facade 3--	-	-	120	0	O	S	U
PrimaryCrusher_F4	Primary Crusher facade 4--	-	-	114	0	O	S	U
Primary_F4_binOP	PriCru_fac_4_binOp--	-	-	115	0	O	S	U
ProcessPlant_F1	Proces Plant Input Facade 1--	-	-	101	0	O	S	U
ProcessPlant_F2	Proces Plant Input Facade 2--	-	-	105	0	O	S	U
ProcessPlant_F3	Proces Plant Input Facade 3--	-	-	101	0	O	S	U
ProcessPlant_F4	Proces Plant Input Facade 4--	-	-	105	0	O	S	U
TransferTowerPebbleCrusher_F1	Transfer Tower Pebble Crusher facade 1	-	-	117	0	O	S	U
TransferTowerPebbleCrusher_F2	Transfer Tower Pebble Crusher facade 2	-	-	116	0	O	S	U
TransferTowerPebbleCrusher_F3	Transfer Tower Pebble Crusher facade 3	-	-	117	0	O	S	U
TransferTowerPebbleCrusher_F4	Transfer Tower Pebble Crusher facade 4	-	-	116	0	O	S	U

Notes on Table:

1. Wherever possible, the Source ID matches the identifiers used in the ESDM report.
2. Source centre of gravity coordinates used for Line and Area sources. Vertical area source coordinates not provided since corresponding area source coordinates are provided.
3. Sound Power Level of Source, in dBA, including sound characteristic adjustments per NPC-104.
4. Source Location: O = Outside of building, including the roof, I = Inside of building
5. Sound Characteristic, per NPC-104
   S = Steady; I = Impulsive; T = Tonal
   Q = Quasi-Steady Impulsive; B = Buzzing; C = Cyclic
6. Noise Control Measures Included
   S = Silencer/Muffler; L = Lagging; O = Other
   A = Acoustic lining, plenum; E = acoustic enclosure; U = uncontrolled
   B = Barrier

Table A-2a: Peak Production Phase - Point of Reception Noise Impact

Daytime - LAeq,1hr

Project: Great Bear Project
Location: Red Lake, ON

Source ID	Source Description	Residence/Cabin/Lodge/Camp POR1 POR1 POR1 Point of Reception ID: POR1 Point of Reception Description: Residence/Cabin/Lodge/Camp Point of reception coordinates			Residence/Cabin/Lodge/Camp POR4 POR4 POR4 Point of Reception ID: POR4 Point of Reception Description: Residence/Cabin/Lodge/Camp Point of reception coordinates			Residence/Cabin/Lodge/Camp POR5 POR5 POR5 Point of Reception ID: POR5 Point of Reception Description: Residence/Cabin/Lodge/Camp Point of reception coordinates			Residence/Cabin/Lodge/Camp POR6 POR6 POR6 Point of Reception ID: POR6 Point of Reception Description: Residence/Cabin/Lodge/Camp Point of reception coordinates		
		X	Y	Z [2]	X	Y	Z [2]	X	Y	Z [2]	X	Y	Z [2]
		456965	5639223	372	451915	5639044	357	451671	5630891	354	465139	5634939	350
		Point of Reception 1			Point of Reception 4			Point of Reception 5			Point of Reception 6		
		Distance [3] (m)	Sound Level at PoR	Units [1] (dBA)	Distance [3] (m)	Sound Level at PoR	Units [1] (dBA)	Distance [3] (m)	Sound Level at PoR	Units [1] (dBA)	Distance [3] (m)	Sound Level at PoR	Units [1] (dBA)
TransferTowerPebbleCrusher_F1	Transfer Tower Pebble Crusher facade 1	MS	10	dBA	MS	10	dBA	MS	24	dBA	MS	2	dBA
TransferTowerPebbleCrusher_F2	Transfer Tower Pebble Crusher facade 2	MS	9	dBA	MS	9	dBA	MS	23	dBA	MS	15	dBA
TransferTowerPebbleCrusher_F3	Transfer Tower Pebble Crusher facade 3	MS	22	dBA	MS	24	dBA	MS	12	dBA	MS	16	dBA
TransferTowerPebbleCrusher_F4	Transfer Tower Pebble Crusher facade 4	MS	21	dBA	MS	23	dBA	MS	16	dBA	MS	1	dBA
TransferTowerPebbleCrusher_Top	Transfer Tower Pebble Crusher Top	4687	23	dBA	5060	18	dBA	5250	23	dBA	10193	15	dBA
PrimaryCrusher_F1	Primary Crusher facade 1--	MS	28	dBA	MS	12	dBA	MS	13	dBA	MS	19	dBA
PrimaryCrusher_F2	Primary Crusher facade 2--	MS	25	dBA	MS	24	dBA	MS	10	dBA	MS	16	dBA
PrimaryCrusher_F3	Primary Crusher facade 3--	MS	12	dBA	MS	27	dBA	MS	28	dBA	MS	4	dBA
PrimaryCrusher_F4	Primary Crusher facade 4--	MS	5	dBA	MS	6	dBA	MS	22	dBA	MS	-2	dBA
Primary_F4_binOP	PriCru_fac_4_binOp--	MS	7	dBA	MS	8	dBA	MS	21	dBA	MS	0	dBA
Primary Crusher_Top	Primary Crusher Top--	5035	25	dBA	5243	23	dBA	4915	25	dBA	10334	16	dBA
5 MW NaturalGasPower Casing - Powe	5 MW Natural Gas-Fired Reciprocating Engine Casing	2589	21	dBA	5629	9	dBA	7837	5	dBA	8311	3	dBA
5 MW NaturalGasPower Casing - Powe	5 MW Natural Gas-Fired Reciprocating Engine Casing	2613	21	dBA	5656	9	dBA	7832	5	dBA	8289	3	dBA
5 MW NaturalGasPower Casing - Powe	5 MW Natural Gas-Fired Reciprocating Engine Casing	2619	20	dBA	5662	9	dBA	7830	5	dBA	8283	3	dBA
5 MW NaturalGasPower Casing - Powe	5 MW Natural Gas-Fired Reciprocating Engine Casing	2625	20	dBA	5668	9	dBA	7828	5	dBA	8279	4	dBA
5 MW NaturalGasPower Casing - Powe	5 MW Natural Gas-Fired Reciprocating Engine Casing	2630	20	dBA	5673	9	dBA	7827	5	dBA	8274	4	dBA
5 MW NaturalGasPower Casing - Powe	5 MW Natural Gas-Fired Reciprocating Engine Casing	2634	20	dBA	5678	9	dBA	7826	5	dBA	8271	4	dBA
5 MW NaturalGasPower Casing - Powe	5 MW Natural Gas-Fired Reciprocating Engine Casing	2594	20	dBA	5636	9	dBA	7836	4	dBA	8306	3	dBA
5 MW NaturalGasPower Casing - Powe	5 MW Natural Gas-Fired Reciprocating Engine Casing	2601	21	dBA	5642	9	dBA	7834	4	dBA	8300	3	dBA
5 MW NaturalGasPower Casing - Powe	5 MW Natural Gas-Fired Reciprocating Engine Casing	2607	21	dBA	5649	9	dBA	7833	4	dBA	8294	3	dBA
5 MW Gen Exhaust - Power Plant	5 MW Natural Gas-Fired Reciprocating Engine outlet-- Exhaust	2606	15	dBA	5651	5	dBA	7835	1	dBA	8293	1	dBA
5 MW Gen Exhaust - Power Plant	5 MW Natural Gas-Fired Reciprocating Engine outlet-- Exhaust	2612	15	dBA	5657	5	dBA	7834	1	dBA	8287	1	dBA
5 MW Gen Exhaust - Power Plant	5 MW Natural Gas-Fired Reciprocating Engine outlet-- Exhaust	2618	15	dBA	5664	5	dBA	7832	1	dBA	8282	1	dBA
5 MW Gen Exhaust - Power Plant	5 MW Natural Gas-Fired Reciprocating Engine outlet-- Exhaust	2624	15	dBA	5669	5	dBA	7830	1	dBA	8277	1	dBA
5 MW Gen Exhaust - Power Plant	5 MW Natural Gas-Fired Reciprocating Engine outlet-- Exhaust	2629	15	dBA	5675	5	dBA	7829	1	dBA	8272	1	dBA
5 MW Gen Exhaust - Power Plant	5 MW Natural Gas-Fired Reciprocating Engine outlet-- Exhaust	2633	15	dBA	5679	5	dBA	7828	1	dBA	8269	1	dBA
5 MW Gen Exhaust - Power Plant	5 MW Natural Gas-Fired Reciprocating Engine outlet-- Exhaust	2593	15	dBA	5637	5	dBA	7838	1	dBA	8304	1	dBA
5 MW Gen Exhaust - Power Plant	5 MW Natural Gas-Fired Reciprocating Engine outlet-- Exhaust	2600	15	dBA	5644	5	dBA	7837	1	dBA	8298	1	dBA
5 MW Gen Exhaust - Power Plant	5 MW Natural Gas-Fired Reciprocating Engine outlet-- Exhaust	2587	15	dBA	5631	5	dBA	7840	1	dBA	8309	1	dBA
DieselGenSet_200 kW exhaust - Quarry	DieselGen_200kW_Ex--Diesel GenSet Exhaust	5465	-12	dBA	2401	-2	dBA	5784	-13	dBA	13110	-23	dBA
100 kW DieselGen exhaust - TMF Dam	DieselGen_100kW_Ex--Diesel GenSet Exhaust	4564	-7	dBA	3666	-3	dBA	5464	-10	dBA	11359	-22	dBA
VentilationFan_LP_RAR1	VF_LP_RAR1--LP Return Air Raise	4919	12	dBA	6511	7	dBA	5860	9	dBA	8748	1	dBA
VentilationFan_LP_RAR1	VF_LP_RAR1--LP Return Air Raise	4918	12	dBA	6510	7	dBA	5860	9	dBA	8749	1	dBA
DieselGenSet_50 kW casing - Chakuni I	DieselGen_50kW_Case--Diesel GenSet Casing	8721	-8	dBA	12993	-13	dBA	12491	-13	dBA	1734	13	dBA
DieselGenSet_50kW exhaust - Chakuni	DieselGen_50kW_Ex--Diesel GenSet Exhaust	8714	-20	dBA	12985	-26	dBA	12483	-26	dBA	1740	5	dBA
DieselGenSet_200 kW casing - Chakuni	DieselGen_200kW_Case--Diesel GenSet Casing	9644	-7	dBA	14042	-13	dBA	13587	-12	dBA	1154	19	dBA
DieselGenSet_200 kW exhaust - Chaku	DieselGen_200kW_Ex--Diesel GenSet Exhaust	9634	-17	dBA	14030	-23	dBA	13575	-22	dBA	1156	14	dBA
UOR21 NPAG Stockpile to SouthDam	Haul Truck--CAT 777F	MS	31	dBA	MS	29	dBA	MS	26	dBA	MS	18	dBA
UOR2 LP Central to PAG Stockpile	Haul Truck--CAT 785	MS	34	dBA	MS	29	dBA	MS	29	dBA	MS	26	dBA
VentilationFan_LP_HL_FAR1	VF_LP_HL_FAR1--LP Fresh Air Raise	5632	23	dBA	7289	18	dBA	5761	22	dBA	8489	15	dBA
VentilationFan_LP_HL_FAR1	VF_LP_HL_FAR1--LP Fresh Air Raise	5631	23	dBA	7289	18	dBA	5761	22	dBA	8489	15	dBA
HVAC_admin_B_in	HVAC_inlet--	4365	-6	dBA	4953	-8	dBA	5573	-10	dBA	10025	-20	dBA
HVAC_admin_B_in	HVAC_inlet--	4221	-5	dBA	4865	-9	dBA	5706	-10	dBA	9999	-20	dBA
HVAC_admin_B_in	HVAC_inlet--	4375	-6	dBA	5032	-8	dBA	5583	-10	dBA	9953	-20	dBA
HVAC_admin_out	HVAC_outlet--	4364	-8	dBA	4949	-10	dBA	5572	-12	dBA	10029	-23	dBA
HVAC_admin_out	HVAC_outlet--	4221	-7	dBA	4861	-11	dBA	5706	-12	dBA	10003	-23	dBA
HVAC_coreS_out	HVAC_outlet--	4377	-8	dBA	5033	-10	dBA	5581	-12	dBA	9954	-23	dBA
HVAC_cs_in	HVAC_inlet--	4322	-6	dBA	4788	-7	dBA	5583	-10	dBA	10155	-21	dBA
HVAC_cs_out	HVAC_outlet--	4322	-8	dBA	4784	-9	dBA	5583	-12	dBA	10159	-24	dBA

Notes on Table:
1. dBA = 1-hour energy equivalent sound (Leq (1-hr))
2. Height above local grade 3. MS = Mobile Source

Table A-2a: Peak Production Phase - Point of Reception Noise Impact

Daytime - LAeq,1hr

Project: Great Bear Project
Location: Red Lake, ON

		Residence/Cabin/Lodge/Camp	Residence/Cabin/Lodge/Camp	Residence/Cabin/Lodge/Camp	Residence/Cabin/Lodge/Camp
		POR1 POR1 POR1	POR4 POR4 POR4	POR5 POR5 POR5	POR6 POR6 POR6
		Point of Reception ID	**Point of Reception ID**	**Point of Reception ID**	**Point of Reception ID**
		POR1	**POR4**	**POR5**	**POR6**
		Point of Reception Description	**Point of Reception Description**	**Point of Reception Description**	**Point of Reception Description**
		Residence/Cabin/Lodge/Camp	**Residence/Cabin/Lodge/Camp**	**Residence/Cabin/Lodge/Camp**	**Residence/Cabin/Lodge/Camp**
		Point of reception coordinates	**Point of reception coordinates**	**Point of reception coordinates**	**Point of reception coordinates**
		X **Y** **Z [2]**	**X** **Y** **Z [2]**	**X** **Y** **Z [2]**	**X** **Y** **Z [2]**
		456965 5639223 372	451915 5639044 357	451671 5630891 354	465139 5634939 350

Source ID	Source Description	Point of Reception 1			Point of Reception 4			Point of Reception 5			Point of Reception 6		
		Distance [3] (m)	Sound Level at PoR	Units [1] (dBA)	Distance [3] (m)	Sound Level at PoR	Units [1] (dBA)	Distance [3] (m)	Sound Level at PoR	Units [1] (dBA)	Distance [3] (m)	Sound Level at PoR	Units [1] (dBA)
HVAC_CAMP_in	HVAC_inlet--	2026	5	dBA	5608	-10	dBA	8410	-17	dBA	8243	-16	dBA
HVAC_CAMP_in	HVAC_inlet--	2006	6	dBA	5601	-10	dBA	8424	-17	dBA	8250	-16	dBA
HVAC_CAMP_in	HVAC_inlet--	1987	6	dBA	5594	-10	dBA	8438	-17	dBA	8256	-16	dBA
HVAC_CAMP_in	HVAC_inlet--	1969	6	dBA	5588	-10	dBA	8451	-17	dBA	8262	-16	dBA
HVAC_CAMP_in	HVAC_inlet--	1951	6	dBA	5582	-10	dBA	8465	-17	dBA	8267	-16	dBA
HVAC_CAMP_in	HVAC_inlet--	1932	6	dBA	5576	-10	dBA	8479	-17	dBA	8272	-16	dBA
HVAC_CAMP_in	HVAC_inlet--	1915	6	dBA	5570	-10	dBA	8492	-17	dBA	8277	-16	dBA
HVAC_CAMP_in	HVAC_inlet--	1868	6	dBA	5556	-10	dBA	8528	-17	dBA	8291	-16	dBA
HVAC_CAMP_in	HVAC_inlet--	1849	7	dBA	5550	-10	dBA	8543	-17	dBA	8297	-16	dBA
HVAC_CAMP_in	HVAC_inlet--	1857	7	dBA	5606	-10	dBA	8581	-17	dBA	8241	-16	dBA
HVAC_CAMP_in	HVAC_inlet--	1875	6	dBA	5611	-10	dBA	8567	-17	dBA	8236	-16	dBA
HVAC_CAMP_in	HVAC_inlet--	1925	6	dBA	5639	-10	dBA	8540	-17	dBA	8209	-16	dBA
HVAC_CAMP_in	HVAC_inlet--	1942	6	dBA	5644	-10	dBA	8527	-17	dBA	8203	-16	dBA
HVAC_CAMP_in	HVAC_inlet--	1962	6	dBA	5651	-10	dBA	8512	-17	dBA	8197	-16	dBA
HVAC_CAMP_in	HVAC_inlet--	1979	6	dBA	5656	-10	dBA	8499	-17	dBA	8192	-16	dBA
HVAC_CAMP_in	HVAC_inlet--	1998	6	dBA	5662	-10	dBA	8485	-17	dBA	8187	-16	dBA
HVAC_CAMP_in	HVAC_inlet--	2017	5	dBA	5669	-10	dBA	8471	-17	dBA	8181	-16	dBA
HVAC_CAMP_in	HVAC_inlet--	2035	5	dBA	5675	-10	dBA	8457	-17	dBA	8176	-16	dBA
HVAC_CAMP_in	HVAC_inlet--	4569	-8	dBA	5006	-8	dBA	5365	-9	dBA	10144	-20	dBA
HVAC_CAMP_out	HVAC_outlet--	2026	3	dBA	5615	-12	dBA	8415	-20	dBA	8236	-19	dBA
HVAC_CAMP_out	HVAC_outlet--	2007	3	dBA	5609	-12	dBA	8429	-20	dBA	8242	-19	dBA
HVAC_CAMP_out	HVAC_outlet--	1989	3	dBA	5603	-12	dBA	8443	-20	dBA	8247	-19	dBA
HVAC_CAMP_out	HVAC_outlet--	1970	3	dBA	5597	-12	dBA	8458	-20	dBA	8252	-19	dBA
HVAC_CAMP_out	HVAC_outlet--	1953	3	dBA	5592	-12	dBA	8471	-20	dBA	8257	-19	dBA
HVAC_CAMP_out	HVAC_outlet--	1935	4	dBA	5586	-12	dBA	8484	-20	dBA	8262	-19	dBA
HVAC_CAMP_out	HVAC_outlet--	1916	4	dBA	5580	-12	dBA	8499	-20	dBA	8268	-19	dBA
HVAC_CAMP_out	HVAC_outlet--	1870	4	dBA	5565	-12	dBA	8534	-20	dBA	8282	-19	dBA
HVAC_CAMP_out	HVAC_outlet--	1851	4	dBA	5559	-12	dBA	8549	-20	dBA	8288	-19	dBA
HVAC_CAMP_out	HVAC_outlet--	1858	4	dBA	5612	-12	dBA	8586	-20	dBA	8235	-19	dBA
HVAC_CAMP_out	HVAC_outlet--	1876	4	dBA	5617	-12	dBA	8572	-20	dBA	8230	-19	dBA
HVAC_CAMP_out	HVAC_outlet--	1925	4	dBA	5645	-12	dBA	8545	-20	dBA	8202	-19	dBA
HVAC_CAMP_out	HVAC_outlet--	1943	3	dBA	5650	-12	dBA	8531	-20	dBA	8197	-19	dBA
HVAC_CAMP_out	HVAC_outlet--	1963	3	dBA	5656	-12	dBA	8516	-20	dBA	8192	-19	dBA
HVAC_CAMP_out	HVAC_outlet--	1980	3	dBA	5662	-12	dBA	8504	-20	dBA	8186	-19	dBA
HVAC_CAMP_out	HVAC_outlet--	1998	3	dBA	5668	-12	dBA	8490	-20	dBA	8181	-19	dBA
HVAC_CAMP_out	HVAC_outlet--	2017	3	dBA	5675	-12	dBA	8476	-20	dBA	8175	-19	dBA
HVAC_CAMP_out	HVAC_outlet--	2036	3	dBA	5682	-12	dBA	8462	-20	dBA	8169	-19	dBA
HVAC_CAMP_out	HVAC_outlet--	4567	-10	dBA	5011	-11	dBA	5369	-11	dBA	10136	-23	dBA
HVAC_st_in	HVAC_inlet--	4249	-5	dBA	4812	-7	dBA	5665	-10	dBA	10074	-20	dBA
HVAC_st_out	HVAC_outlet--	4248	-7	dBA	4808	-9	dBA	5665	-12	dBA	10077	-23	dBA
HVAC_TireRS_in	HVAC_inlet--	4178	-5	dBA	4697	-7	dBA	5720	-10	dBA	10132	-20	dBA
HVAC_TireRS_out	HVAC_outlet--	4178	-7	dBA	4692	-9	dBA	5719	-12	dBA	10137	-23	dBA
HVAC_warmSB_in	HVAC_inlet--	4350	-6	dBA	4891	-8	dBA	5574	-10	dBA	10076	-20	dBA
HVAC_warmSB_in	HVAC_inlet--	4298	-5	dBA	4875	-10	dBA	5626	-10	dBA	10050	-20	dBA
HVAC_warmSB_out	HVAC_outlet--	4348	-8	dBA	4884	-10	dBA	5574	-12	dBA	10081	-23	dBA
HVAC_warmSB_out	HVAC_outlet--	4297	-8	dBA	4869	-14	dBA	5626	-12	dBA	10055	-23	dBA
UG_Truck_50t	UG Truck 50t	MS	-20	dBA	MS	-18	dBA	MS	-16	dBA	MS	-27	dBA
UG_BoomTruck	UG Boom Truck	MS	-21	dBA	MS	-23	dBA	MS	-20	dBA	MS	-32	dBA
UG_BusPersonnel	UG Bus passenger	MS	-28	dBA	MS	-29	dBA	MS	-25	dBA	MS	-37	dBA
UG_CRF_Truck	UG CRF Truck	MS	-18	dBA	MS	-17	dBA	MS	-15	dBA	MS	-26	dBA
UG_EmulsionDevCarrier	UG Emulsion Dev-carrier	MS	-16	dBA	MS	-19	dBA	MS	-16	dBA	MS	-27	dBA

Notes on Table:
1. dBA = 1-hour energy equivalent sound (Leq (1-hr))
2. Height above local grade 3. MS = Mobile Source

Table A-2a: Peak Production Phase - Point of Reception Noise Impact

Daytime - LAeq,1hr

Project: Great Bear Project
Location: Red Lake, ON

		Residence/Cabin/Lodge/Camp POR1 POR1 POR1	Residence/Cabin/Lodge/Camp POR4 POR4 POR4	Residence/Cabin/Lodge/Camp POR5 POR5 POR5	Residence/Cabin/Lodge/Camp POR6 POR6 POR6
		Point of Reception ID	**Point of Reception ID**	**Point of Reception ID**	**Point of Reception ID**
		POR1	**POR4**	**POR5**	**POR6**
		Point of Reception Description	**Point of Reception Description**	**Point of Reception Description**	**Point of Reception Description**
		Residence/Cabin/Lodge/Camp	**Residence/Cabin/Lodge/Camp**	**Residence/Cabin/Lodge/Camp**	**Residence/Cabin/Lodge/Camp**
		Point of reception coordinates	**Point of reception coordinates**	**Point of reception coordinates**	**Point of reception coordinates**
		X | **Y** | **Z [2]**	**X** | **Y** | **Z [2]**	**X** | **Y** | **Z [2]**	**X** | **Y** | **Z [2]**
		456965 | 5639223 | 372	451915 | 5639044 | 357	451671 | 5630891 | 354	465139 | 5634939 | 350
Source ID	**Source Description**	**Point of Reception 1**	**Point of Reception 4**	**Point of Reception 5**	**Point of Reception 6**
		Distance [3] (m) | **Sound Level at PoR** | **Units [1] (dBA)**	**Distance [3] (m)** | **Sound Level at PoR** | **Units [1] (dBA)**	**Distance [3] (m)** | **Sound Level at PoR** | **Units [1] (dBA)**	**Distance [3] (m)** | **Sound Level at PoR** | **Units [1] (dBA)**
UG_EmulsionProdCarrier	UG Emulsion Prod-carrier	MS | -30 | dBA	MS | -32 | dBA	MS | -29 | dBA	MS | -41 | dBA
UG_TractorForkBackhoe	UG Tractor with Fork and Backhoe	MS | -14 | dBA	MS | -16 | dBA	MS | -14 | dBA	MS | -23 | dBA
UG_FuelNLube	UG Boom Truck	MS | -37 | dBA	MS | -39 | dBA	MS | -36 | dBA	MS | -48 | dBA
UG_Grader	UG Grader	MS | -23 | dBA	MS | -25 | dBA	MS | -20 | dBA	MS | -32 | dBA
UG_JeepPersonnel	UG Jeep personnel carrier	MS | -23 | dBA	MS | -26 | dBA	MS | -23 | dBA	MS | -35 | dBA
UG_JeepVehicle	UG Jeep maintenance vehicle	MS | -34 | dBA	MS | -37 | dBA	MS | -34 | dBA	MS | -45 | dBA
UG_MobileCrane	UG Terrain mobile crane	MS | -30 | dBA	MS | -32 | dBA	MS | -30 | dBA	MS | -39 | dBA
UG_RoughTerrainFork	UG Rough Terrain Forklift	MS | -17 | dBA	MS | -20 | dBA	MS | -17 | dBA	MS | -25 | dBA
UG_Scissor	UG Scissor lift	MS | -9 | dBA	MS | -11 | dBA	MS | -8 | dBA	MS | -17 | dBA
UG_Shotcrete	UG Shotcrete Sprayer	MS | -22 | dBA	MS | -22 | dBA	MS | -20 | dBA	MS | -31 | dBA
UG_TransMixer	UG Transmixer	MS | -23 | dBA	MS | -22 | dBA	MS | -21 | dBA	MS | -31 | dBA
UG_WaterSpryer	UG Water spryer w/carrier	MS | -21 | dBA	MS | -23 | dBA	MS | -21 | dBA	MS | -29 | dBA
BlastLoaderCAT262_01_pp	Blasting Loader--CAT 262	6112 | -12 | dBA	8850 | -3 | dBA	7453 | -1 | dBA	6629 | -15 | dBA
BlastLoaderCAT262_02_pp	Blasting Loader--CAT 262	5283 | -17 | dBA	7466 | -7 | dBA	6486 | -19 | dBA	7823 | -21 | dBA
BlasterTruck_01_pp	Blasters Truck--F350	MS | -20 | dBA	MS | -25 | dBA	MS | -25 | dBA	MS | -27 | dBA
BlasterTruck_02_pp	Blasters Truck--F350	MS | -24 | dBA	MS | -30 | dBA	MS | -27 | dBA	MS | -27 | dBA
BusPersonnel_01_pp	Bus (60 seats)--BusPersonnel	MS | -4 | dBA	MS | -14 | dBA	MS | -16 | dBA	MS | -20 | dBA
BusPersonnel_02_pp	Bus (60 seats)--BusPersonnel	MS | -25 | dBA	MS | -25 | dBA	MS | -23 | dBA	MS | -30 | dBA
BusPersonnel_03_pp	Bus (60 seats)--BusPersonnel	MS | -10 | dBA	MS | -14 | dBA	MS | -14 | dBA	MS | -22 | dBA
BusPersonnel_04_pp	UG Bus passenger	MS | -18 | dBA	MS | -26 | dBA	MS | -26 | dBA	MS | -27 | dBA
ContainerTrailerTruck_pp	Container Trailer Truck--ContTT	MS | -7 | dBA	MS | -17 | dBA	MS | -21 | dBA	MS | -28 | dBA
CrusherQJ341_PP	Crusher--Sandvik QJ341	5060 | 4 | dBA	7008 | 0 | dBA	6215 | 11 | dBA	8234 | -2 | dBA
Dozer_CAT_D10_02_pp	Dozer - D10--CAT D10	3392 | 26 | dBA	6069 | 19 | dBA	7316 | 16 | dBA	8125 | 15 | dBA
Dozer_CAT_D10_03_pp	Dozer - D10--CAT D10	4323 | 20 | dBA	5466 | 17 | dBA	5816 | 16 | dBA	9450 | 10 | dBA
Dozer_CAT_D10_pp	Dozer - D10--CAT D10	4152 | 24 | dBA	5766 | 19 | dBA	6192 | 19 | dBA	8976 | 13 | dBA
Dozer_CAT_D6_01_pp	Dozer - D6--CAT D6	4049 | 18 | dBA	7214 | 10 | dBA	7820 | 9 | dBA	7048 | 11 | dBA
Dozer_CAT_D6_02_pp	Dozer - D6--CAT D6	4223 | 17 | dBA	7191 | 10 | dBA	7556 | 10 | dBA	7205 | 10 | dBA
Dozer_CAT_D6_03_pp	Dozer - D6--CAT D6	3436 | 20 | dBA	5207 | 15 | dBA	6672 | 12 | dBA	9121 | 7 | dBA
Dozer_CAT_D8_pit	Dozer--CAT D8	5044 | 4 | dBA	7020 | 9 | dBA	6241 | 14 | dBA	8200 | 1 | dBA
DewateringPump_01_pp	Dewatering Pump--DeWPump	4777 | 0 | dBA	6294 | -5 | dBA	5843 | -5 | dBA	8883 | -14 | dBA
DewateringPump_02_pp	Dewatering Pump--DeWPump	5720 | -13 | dBA	7869 | -11 | dBA	6427 | -7 | dBA	7738 | -11 | dBA
DewateringPump_03_pp	Dewatering Pump--DeWPump	4693 | -1 | dBA	6309 | -6 | dBA	5961 | -5 | dBA	8785 | -14 | dBA
DewateringPump_04_pp	Dewatering Pump--DeWPump	5059 | -2 | dBA	8027 | -11 | dBA	7631 | -10 | dBA	6708 | -8 | dBA
DewateringPump_05_pp	Dewatering Pump--DeWPump	5690 | -14 | dBA	7798 | -11 | dBA	6365 | -6 | dBA	7811 | -11 | dBA
DewateringPump_06_pp	Dewatering Pump--DeWPump	6094 | -24 | dBA	8848 | -14 | dBA	7477 | -10 | dBA	6607 | -26 | dBA
DewateringPump_07_pp	Dewatering Pump--DeWPump	5378 | -3 | dBA	7356 | -10 | dBA	6201 | -6 | dBA	8092 | -12 | dBA
DewateringPump_08_pp	Dewatering Pump--DeWPump	4676 | -1 | dBA	6843 | -8 | dBA	6524 | -7 | dBA	8075 | -12 | dBA
DewateringPump_09_pp	Dewatering Pump--DeWPump	5938 | -12 | dBA	8389 | -12 | dBA	6920 | -8 | dBA	7186 | -9 | dBA
DewateringPump_10_pp	Dewatering Pump--DeWPump	6054 | -6 | dBA	8901 | -14 | dBA	7635 | -10 | dBA	6452 | -9 | dBA
DiePump_01_pp	Diesel Pump--HL250M	5288 | -40 | dBA	7444 | -31 | dBA	6447 | -43 | dBA	7862 | -46 | dBA
DiePump_02_pp	Diesel Pump--HL250M	5298 | -21 | dBA	7133 | -27 | dBA	6033 | -40 | dBA	8317 | -32 | dBA
DiePump_03_pp	Diesel Pump--HL250M	6082 | -37 | dBA	8886 | -32 | dBA	7565 | -28 | dBA	6519 | -43 | dBA
DiePump_04_pp	Diesel Pump--HL250M	5473 | -30 | dBA	7832 | -29 | dBA	6730 | -26 | dBA	7489 | -46 | dBA
DiePump_05_pp	Diesel Pump--HL250M	6127 | -42 | dBA	8860 | -32 | dBA	7448 | -28 | dBA	6633 | -44 | dBA
Excavator_CAT374_01_pp	Excavator--CAT 374	4637 | 5 | dBA	6583 | 0 | dBA	6294 | 1 | dBA	8384 | -3 | dBA
Excavator_CAT374_02_pp	Excavator--CAT 374	5666 | 2 | dBA	7819 | -2 | dBA	6431 | 1 | dBA	7748 | -2 | dBA
Excavator_CAT374_03_pp	Excavator--CAT 374	6131 | -17 | dBA	8895 | -5 | dBA	7504 | -2 | dBA	6576 | -19 | dBA
ExploMagazine_DieselGen_100kW_case	DieselGen_100kW_Case--Diesel GenSet Casing	4897 | 1 | dBA	7815 | -5 | dBA	7530 | -4 | dBA	6876 | -3 | dBA
ExploMagazineDieselGenSet_100kW_ex	DieselGen_100kW_Ex--Diesel GenSet Exhaust	4899 | -9 | dBA	7816 | -17 | dBA	7528 | -16 | dBA	6877 | -15 | dBA
ExploStorage_DieselGen_100kW_case	DieselGen_100kW_Case--Diesel GenSet Casing	5379 | 0 | dBA	8682 | -6 | dBA	8288 | -5 | dBA	5961 | -2 | dBA
ExploStorageDieselGenSet_100kW_ex	DieselGen_100kW_Ex--Diesel GenSet Exhaust	5380 | -11 | dBA	8685 | -18 | dBA	8290 | -18 | dBA	5958 | -12 | dBA

Notes on Table:
1. dBA = 1-hour energy equivalent sound (Leq (1-hr))
2. Height above local grade 3. MS = Mobile Source

Table A-2a: Peak Production Phase - Point of Reception Noise Impact

Daytime - LAeq,1hr

Project: Great Bear Project
Location: Red Lake, ON

Source ID	Source Description	Residence/Cabin/Lodge/Camp POR1 POR1 POR1 Point of Reception ID: POR1 Point of Reception Description: Residence/Cabin/Lodge/Camp Point of reception coordinates: X 456965, Y 5639223, Z [2] 372			Residence/Cabin/Lodge/Camp POR4 POR4 POR4 Point of Reception ID: POR4 Point of Reception Description: Residence/Cabin/Lodge/Camp Point of reception coordinates: X 451915, Y 5639044, Z [2] 357			Residence/Cabin/Lodge/Camp POR5 POR5 POR5 Point of Reception ID: POR5 Point of Reception Description: Residence/Cabin/Lodge/Camp Point of reception coordinates: X 451671, Y 5630891, Z [2] 354			Residence/Cabin/Lodge/Camp POR6 POR6 POR6 Point of Reception ID: POR6 Point of Reception Description: Residence/Cabin/Lodge/Camp Point of reception coordinates: X 465139, Y 5634939, Z [2] 350		
		Point of Reception 1			Point of Reception 4			Point of Reception 5			Point of Reception 6		
		Distance [3] (m)	Sound Level at PoR	Units [1] (dBA)	Distance [3] (m)	Sound Level at PoR	Units [1] (dBA)	Distance [3] (m)	Sound Level at PoR	Units [1] (dBA)	Distance [3] (m)	Sound Level at PoR	Units [1] (dBA)
CrushFeeder_CAT777_idling	Haul Truck--CAT 777F	5053	3	dBA	5258	5	dBA	4899	19	dBA	10336	8	dBA
FrontLoaderSmallerCAT966_01_pp	Front End Loader (smaller)--CAT 966	5275	12	dBA	7232	8	dBA	6185	0	dBA	8153	-11	dBA
FrontLoaderSmallerCAT966_02_pp	Front End Loader (smaller)--CAT 966	5478	12	dBA	7565	8	dBA	6339	-4	dBA	7904	7	dBA
FrontLoaderSmallerCAT966_03_pp	Front End Loader (smaller)--CAT 966	6110	-3	dBA	8876	6	dBA	7504	9	dBA	6579	-8	dBA
FrontLoaderSmallerCAT966_04_pp	Front End Loader (smaller)--CAT 966	6087	-8	dBA	8825	6	dBA	7448	8	dBA	6637	-8	dBA
FlatDeckTruck_pp	Flat Deck Truck--FlatDT	MS	2	dBA	MS	-8	dBA	MS	-12	dBA	MS	-19	dBA
FrontLoaderCAT993_01_pp	Front End Loader--CAT993	6150	-3	dBA	8905	9	dBA	7494	11	dBA	6585	-5	dBA
FrontLoaderCAT993_02_pp	Front End Loader--CAT993	5168	-2	dBA	7443	11	dBA	6613	-2	dBA	7729	-8	dBA
FrontLoaderCAT993_03_pp	Front End Loader--CAT993	5080	-2	dBA	7035	-6	dBA	6220	1	dBA	8218	-9	dBA
Fork_CATDP4055_01_pp	Forklift--Cat DP40-55(C)N3, 5.5t	4321	1	dBA	4939	-5	dBA	5617	-5	dBA	10003	-9	dBA
Fork_CATDP4055_02_pp	Forklift--Cat DP40-55(C)N3, 5.5t	4232	1	dBA	4786	0	dBA	5677	-2	dBA	10087	-23	dBA
Fork_CATDP4055_03_pp	Forklift--Cat DP40-55(C)N3, 5.5t	4479	0	dBA	4941	-1	dBA	5446	-14	dBA	10132	-21	dBA
Fork_CATDP4055_04_pp	Forklift--Cat DP40-55(C)N3, 5.5t	5071	-21	dBA	7160	-13	dBA	6378	-17	dBA	8033	-27	dBA
Fork_CATDP4055_05_pp	Forklift--Cat DP40-55(C)N3, 5.5t	4479	0	dBA	4941	-1	dBA	5446	-14	dBA	10132	-21	dBA
FuelTankerTruck_CAT740_01_pp	Fuel Tanker Truck (30,000 L)--CAT 740	MS	-6	dBA	MS	-13	dBA	MS	-15	dBA	MS	-18	dBA
FuelTankerTruck_02_pp	Fuel Tanker Truck (30,000 L)--CAT 740	MS	-24	dBA	MS	-23	dBA	MS	-21	dBA	MS	-28	dBA
FusionMachine_01_pp	Fusion Machine--Ritmo Delta 250	5276	-35	dBA	7516	-31	dBA	6565	-38	dBA	7742	-43	dBA
FusionMachine_02_pp	Fusion Machine--Ritmo Delta 250	6108	-36	dBA	8864	-28	dBA	7484	-24	dBA	6598	-40	dBA
FusionMachine_03_pp	Fusion Machine--Ritmo Delta 250	4970	-33	dBA	6970	-41	dBA	6288	-26	dBA	8191	-45	dBA
HighCubeTruck_pp	High Cube Truck--Ford F-650 SD DIESEL	MS	-7	dBA	MS	-17	dBA	MS	-22	dBA	MS	-28	dBA
IntegratedToolCarrier_pp	Integrated Tool Carrier--WA200-7	3025	10	dBA	5434	3	dBA	7237	0	dBA	8674	-3	dBA
LowboyNTractor_75t_pp	Lowboy and Tractor--75ton - 100ton	MS	-5	dBA	MS	-15	dBA	MS	-20	dBA	MS	-26	dBA
MechanicsTruck_01_pp	Mechanics Truck--Mtruck	MS	-14	dBA	MS	-19	dBA	MS	-20	dBA	MS	-24	dBA
MechanicsTruck_02_pp	Mechanics Truck--Mtruck	MS	-27	dBA	MS	-27	dBA	MS	-25	dBA	MS	-33	dBA
MechanicsTruck_03_pp	Mechanics Truck--Mtruck	MS	-15	dBA	MS	-20	dBA	MS	-22	dBA	MS	-31	dBA
MechanicsTruck_04_pp	Mechanics Truck--Mtruck	MS	-19	dBA	MS	-27	dBA	MS	-27	dBA	MS	-28	dBA
MechanicsTruck_05_pp	Mechanics Truck--Mtruck	MS	-15	dBA	MS	-9	dBA	MS	-20	dBA	MS	-31	dBA
MobileCrane150t_pp	150t Mobile Crane--MobCrane150t	4498	1	dBA	5021	-4	dBA	5446	-17	dBA	10067	-10	dBA
MobileCrane50t_01_pp	50t Mobile Crane--Tadano GR-500XL	4492	11	dBA	4925	10	dBA	5429	-10	dBA	10160	-5	dBA
MobileCrane50t_02_pp	50t Mobile Crane--Tadano GR-500XL	4488	6	dBA	4990	0	dBA	5449	-4	dBA	10090	-6	dBA
OreControlDrill_01_pp	Ore Control Drill--Explorac E100	5070	-1	dBA	7222	12	dBA	6455	13	dBA	7942	-7	dBA
OreControlDrill_02_pp	Ore Control Drill--Explorac E100	6088	0	dBA	8811	10	dBA	7420	12	dBA	6664	-4	dBA
OreControlDrill_03_pp	Ore Control Drill--Explorac E100	5490	8	dBA	7686	11	dBA	6495	-6	dBA	7734	-1	dBA
OreControlDrill_04_pp	Ore Control Drill--Explorac E100	5490	8	dBA	7686	11	dBA	6495	-6	dBA	7734	-1	dBA
OreControlDrill_05_pp	Ore Control Drill--Explorac E100	5490	8	dBA	7686	11	dBA	6495	-6	dBA	7734	-1	dBA
PrimaryDrill_D65_01_pp	Primary Drill--140mm SmartRoc D65	5162	8	dBA	7260	17	dBA	6378	14	dBA	7987	-1	dBA
PrimaryDrill_D65_02_pp	Primary Drill--140mm SmartRoc D65	5376	2	dBA	7603	16	dBA	6543	0	dBA	7727	-2	dBA
PrimaryDrill_D65_03_pp	Primary Drill--140mm SmartRoc D65	6099	5	dBA	8807	16	dBA	7396	18	dBA	6687	5	dBA
ProductionDrill_PV235_01_pp	Production Drill--Epiroc Pit Viper PV235	5121	-4	dBA	7165	-1	dBA	6318	-4	dBA	8079	-10	dBA
ProductionDrill_PV235_02_pp	Production Drill--Epiroc Pit Viper PV235	5336	-3	dBA	7520	9	dBA	6482	11	dBA	7804	-7	dBA
ProductionDrill_PV235_03_pp	Production Drill--Epiroc Pit Viper PV235	6059	-6	dBA	8775	8	dBA	7400	11	dBA	6688	-4	dBA
ProductionDrill_PV235_04_pp	Production Drill--Epiroc Pit Viper PV235	5037	-4	dBA	6959	-8	dBA	6187	5	dBA	8277	-10	dBA
ProductionDrill_PV235_05_pp	Production Drill--Epiroc Pit Viper PV235	5394	-5	dBA	7694	10	dBA	6647	2	dBA	7610	-9	dBA
ProductionDrill_PV235_06_pp	Production Drill--Epiroc Pit Viper PV235	5063	-4	dBA	7046	-7	dBA	6254	1	dBA	8186	-10	dBA
PortableWaterTruck_pp	Portable Water Truck--PoWT	MS	-3	dBA	MS	-11	dBA	MS	-14	dBA	MS	-21	dBA
PickUp_F150_01_pp	Pick-up--F150	MS	2	dBA	MS	-7	dBA	MS	-10	dBA	MS	-14	dBA
PickUp_F150_02_pp	Pick-up--F150	MS	2	dBA	MS	10	dBA	MS	-3	dBA	MS	-17	dBA
PickUp_F150_03_pp	Pick-up--F150	MS	3	dBA	MS	-4	dBA	MS	-5	dBA	MS	-14	dBA
RoadGrader_CAT16_01_pp	Road Grader--CAT 16	MS	18	dBA	MS	6	dBA	MS	2	dBA	MS	0	dBA
RoadGrader_CAT16_02_pp	Road Grader--CAT 16	MS	6	dBA	MS	15	dBA	MS	8	dBA	MS	-7	dBA
RoadGrader_CAT16_03_pp	Road Grader--CAT 16	MS	4	dBA	MS	15	dBA	MS	-1	dBA	MS	-11	dBA

Notes on Table:
1. dBA = 1-hour energy equivalent sound (Leq (1-hr))
2. Height above local grade 3. MS = Mobile Source

Table A-2a: Peak Production Phase - Point of Reception Noise Impact

Daytime - LAeq,1hr

Project: Great Bear Project
Location: Red Lake, ON

Source ID	Source Description	Residence/Cabin/Lodge/Camp POR1 POR1 POR1 Point of Reception ID: POR1			Residence/Cabin/Lodge/Camp POR4 POR4 POR4 Point of Reception ID: POR4			Residence/Cabin/Lodge/Camp POR5 POR5 POR5 Point of Reception ID: POR5			Residence/Cabin/Lodge/Camp POR6 POR6 POR6 Point of Reception ID: POR6		
		Point of Reception 1			Point of Reception 4			Point of Reception 5			Point of Reception 6		
		Distance [3] (m)	Sound Level at PoR	Units [1] (dBA)	Distance [3] (m)	Sound Level at PoR	Units [1] (dBA)	Distance [3] (m)	Sound Level at PoR	Units [1] (dBA)	Distance [3] (m)	Sound Level at PoR	Units [1] (dBA)
SewageCollectionTruck_pp	Sewage Collection Truck--SewColTruck	MS	-3	dBA	MS	-16	dBA	MS	-20	dBA	MS	-25	dBA
DieselGenset_200kW_Shaft	DieselGen_200kW_Case--Diesel GenSet Casing	4980	2	dBA	6400	-1	dBA	5677	1	dBA	8952	-6	dBA
DieselGenSet_200kW_Shaft_ex	DieselGen_200kW_Ex--Diesel GenSet Exhaust	4980	-6	dBA	6400	-10	dBA	5678	-8	dBA	8951	-16	dBA
Shovel_12m3_pp	Shovel 12.0 m3--CAT 6020	5305	1	dBA	7550	14	dBA	6566	10	dBA	7723	-5	dBA
Shovel_10m3_pp	Shovel 10.0 m3--CAT 6015	6077	-6	dBA	8788	8	dBA	7395	10	dBA	6691	-5	dBA
Shovel_16m3_pp	Shovel 16.5 m3--CAT 6030	5063	-1	dBA	7072	-5	dBA	6286	3	dBA	8148	-8	dBA
Shovel_16m3_pp	Shovel 16.5 m3--CAT 6030	5314	-2	dBA	7613	13	dBA	6645	8	dBA	7640	-7	dBA
SkidSteer_CAT650_01_pp	Skid Steer--Bobcat S650	4305	3	dBA	4737	2	dBA	5593	0	dBA	10191	-12	dBA
SkidSteer_CAT650_02_pp	Skid Steer--Bobcat S650	4467	1	dBA	4950	0	dBA	5462	-15	dBA	10113	-8	dBA
SnowWaterTruck_01_pp	Snow Plow/Water Truck--T880	MS	-2	dBA	MS	-10	dBA	MS	-11	dBA	MS	-18	dBA
SnowWaterTruck_02_pp	Snow Plow/Water Truck--T880	MS	-10	dBA	MS	-15	dBA	MS	-15	dBA	MS	-18	dBA
TireManipulator_WA500_pp	Tire Manipulator--WA-500-7	4182	10	dBA	4724	-5	dBA	5719	8	dBA	10109	0	dBA
TLB_CAT422_01_pp	TLB--Cat 422F2	3139	4	dBA	5465	-2	dBA	7133	-5	dBA	8691	-8	dBA
TLB_CAT422_02_pp	TLB--Cat 422F2	3027	5	dBA	5500	-2	dBA	7277	-5	dBA	8603	-8	dBA
DixieWaterPumpDieselGen_100kW_cas	DieselGen_100kW_Case--Diesel GenSet Casing	5511	-2	dBA	6390	-3	dBA	4980	1	dBA	9537	-7	dBA
DieselWaterPump_Dixie_100kW_ex	DieselGen_100kW_Ex--Diesel GenSet Exhaust	5510	-14	dBA	6392	-14	dBA	4983	-9	dBA	9534	-20	dBA
WaterTruck_CAT740_01_pp	Water Truck (30,000 L)--CAT 740	MS	-12	dBA	MS	-16	dBA	MS	-15	dBA	MS	-20	dBA
WaterTruck_02_pp	Water Truck (30,000 L)--CAT 740	MS	-17	dBA	MS	-19	dBA	MS	-19	dBA	MS	-29	dBA
WheelLoader_CAT844_01_pp	Wheel Loader--CAT 844 RTD	5143	-1	dBA	7271	8	dBA	6417	9	dBA	7951	-9	dBA
WheelLoader_CAT844_02_pp	Wheel Loader--CAT 844 RTD	6137	-5	dBA	8884	6	dBA	7477	8	dBA	6603	-6	dBA
CIPTailingsThickenerUnderflowPump	CIP Tailings Thickener Underflow Pump	4510	4	dBA	4937	3	dBA	5413	-7	dBA	10162	-12	dBA
CyaniteTankAgitator	Cyanide Destruction Tank 1 Agitator	4485	-2	dBA	4938	-3	dBA	5439	-23	dBA	10140	-28	dBA
CyaniteTankAgitator	Cyanide Destruction Tank 1 Agitator	4485	-2	dBA	4928	-3	dBA	5437	-24	dBA	10151	-24	dBA
Desulphulrization_Agitator	Desulphurization AGITATOR, 185kW--Outside building	4426	-3	dBA	4881	-3	dBA	5491	-5	dBA	10147	-19	dBA
Desulphulrization_Agitator	Desulphurization AGITATOR, 185kW--Outside building	4432	-2	dBA	4883	-3	dBA	5485	-5	dBA	10151	-19	dBA
Desulphulrization_Agitator	Desulphurization AGITATOR, 185kW--Outside building	4439	-2	dBA	4886	-3	dBA	5477	-5	dBA	10154	-18	dBA
DesuphurizationlBlower	Flotation generator Blower 1--Desulphurization Flotation Blower 1	4447	-17	dBA	4860	-18	dBA	5464	-19	dBA	10186	-29	dBA
DesulphurizationFlotationPump	Flotation generator Blower 1--Desulphurization Flotation Blower 1	4429	-18	dBA	4883	-18	dBA	5487	-19	dBA	10149	-29	dBA
Detox_blower	Detox Blower, 315kW--4000 cfm inside building	4490	-21	dBA	4998	-24	dBA	5449	-34	dBA	10083	-32	dBA
DustCollectorApronFeeder_pr	Feeder generator Collector--Apron Feeder Dust Collector	5030	-4	dBA	5229	-5	dBA	4917	-4	dBA	10343	-34	dBA
DustCollectorApronFeeder_pr	Feeder generator Collector--Apron Feeder Dust Collector	4623	-18	dBA	5075	-11	dBA	5324	-5	dBA	10120	-15	dBA
DustCollectorApronFeeder_pr	Feeder generator Collector--Apron Feeder Dust Collector	4704	-18	dBA	5066	-5	dBA	5233	-5	dBA	10201	-15	dBA
DustCollectorConeCrusher_pr	Dust Collector for Cone Crusher	5058	-23	dBA	5248	-5	dBA	4891	-4	dBA	10351	-15	dBA
DustCollectorJawCrusher_pr	Dust Collector for Jaw Crusher feeder	5040	-4	dBA	5260	-23	dBA	4914	-4	dBA	10320	-15	dBA
DustCollectorLimeSilo	Lime Silo Dust Collector	4517	-6	dBA	5032	-22	dBA	5428	-22	dBA	10072	-15	dBA
DustCollectorConveyourSF	Sacrificial Conveyor to Stockpile Feed Conveyor Dust Collector	4787	-4	dBA	5097	-4	dBA	5150	-5	dBA	10246	-15	dBA
FlotationTailingsThickerPump	Flotation Tailings Thickener Overflow Pump	4452	6	dBA	4892	6	dBA	5465	4	dBA	10158	-10	dBA
FlotationTailingsThickerPump	Flotation Tailings Thickener Feed Pump, 160kW--Outside building	4459	3	dBA	4893	3	dBA	5457	1	dBA	10164	-13	dBA
FurnaceDustCollector	FurnaceBag Dust Collector	4525	-17	dBA	4990	-18	dBA	5409	-24	dBA	10121	-29	dBA
LeachBlower_280kW	Leach Blower, 280kW--6000 cfm inside building	4481	-22	dBA	4987	-29	dBA	5456	-28	dBA	10087	-32	dBA
LeachTankAgitator_1	Leach Tank Agitator, 150kW--Outside building	4519	-9	dBA	4969	-16	dBA	5411	-23	dBA	10137	-17	dBA
LeachTankAgitator_2	Leach Tank Agitator, 150kW--Outside building	4510	-1	dBA	4982	-3	dBA	5423	-20	dBA	10117	-17	dBA
LeachTankAgitator_3	Leach Tank Agitator, 150kW--Outside building	4498	-1	dBA	4962	-3	dBA	5431	-16	dBA	10128	-17	dBA
LeachTankAgitator_4	Leach Tank Agitator, 150kW--Outside building	4490	-9	dBA	4975	-12	dBA	5443	-16	dBA	10107	-17	dBA
LeachTankAgitator_5	Leach Tank Agitator, 150kW--Outside building	4478	-1	dBA	4954	-3	dBA	5451	-12	dBA	10119	-17	dBA
LeachTankAgitator_6	Leach Tank Agitator, 150kW--Outside building	4470	-1	dBA	4967	-3	dBA	5463	-10	dBA	10098	-17	dBA
PreLeachThickenerPump	Horizontal centrifugal slurry--Pre-leach Thickener Underflow Pump	4515	7	dBA	5013	5	dBA	5425	-5	dBA	10090	-9	dBA
ProductionConveyor	Stockpile Conveyor--w=1.35m; l=183m; 28.1m rise	MS	11	dBA	MS	10	dBA	MS	10	dBA	MS	-1	dBA
ProductionConveyor	Stockpile Conveyor--w=1.35m; l=183m; 28.1m rise	MS	-2	dBA	MS	5	dBA	MS	5	dBA	MS	-5	dBA
ProductionConveyor	Stockpile Conveyor--w=1.35m; l=183m; 28.1m rise	MS	-2	dBA	MS	5	dBA	MS	5	dBA	MS	-6	dBA
ProcessWaterPump_250kW	Process Water Pump, 250kW--Inside building	4524	3	dBA	4998	-10	dBA	5412	-14	dBA	10112	-26	dBA

Residence/Cabin/Lodge/Camp

Point of Reception Description

Residence/Cabin/Lodge/Camp

Point of reception coordinates

POR1 X	POR1 Y	POR1 Z [2]
456965	5639223	372

POR4 X	POR4 Y	POR4 Z [2]
451915	5639044	357

POR5 X	POR5 Y	POR5 Z [2]
451671	5630891	354

POR6 X	POR6 Y	POR6 Z [2]
465139	5634939	350

Notes on Table:
1. dBA = 1-hour energy equivalent sound (Leq (1-hr))
2. Height above local grade 3. MS = Mobile Source

Table A-2a: Peak Production Phase - Point of Reception Noise Impact

Daytime - LAeq,1hr

Project: Great Bear Project
Location: Red Lake, ON

Source ID	Source Description	Residence/Cabin/Lodge/Camp POR1 POR1 POR1 Point of Reception ID POR1			Residence/Cabin/Lodge/Camp POR4 POR4 POR4 Point of Reception ID POR4			Residence/Cabin/Lodge/Camp POR5 POR5 POR5 Point of Reception ID POR5			Residence/Cabin/Lodge/Camp POR6 POR6 POR6 Point of Reception ID POR6		
		Point of Reception Description			Point of Reception Description			Point of Reception Description			Point of Reception Description		
		Residence/Cabin/Lodge/Camp			Residence/Cabin/Lodge/Camp			Residence/Cabin/Lodge/Camp			Residence/Cabin/Lodge/Camp		
		Point of reception coordinates			Point of reception coordinates			Point of reception coordinates			Point of reception coordinates		
		X	Y	Z [2]	X	Y	Z [2]	X	Y	Z [2]	X	Y	Z [2]
		456965	5639223	372	451915	5639044	357	451671	5630891	354	465139	5634939	350
		Point of Reception 1			Point of Reception 4			Point of Reception 5			Point of Reception 6		
		Distance [3] (m)	Sound Level at PoR	Units [1] (dBA)	Distance [3] (m)	Sound Level at PoR	Units [1] (dBA)	Distance [3] (m)	Sound Level at PoR	Units [1] (dBA)	Distance [3] (m)	Sound Level at PoR	Units [1] (dBA)
Tailings_to_PastePump	Tailings to Paste Plant Pump 1	4467	3	dBA	4891	3	dBA	5449	1	dBA	10172	-12	dBA
Tailings_to_PastePump	Tailings to Paste Plant Pump 1	4475	4	dBA	4894	3	dBA	5440	1	dBA	10176	-12	dBA
TailingsPump	Tailings Pump	4509	5	dBA	4922	3	dBA	5410	-18	dBA	10177	-31	dBA
ProcessPlant_F1	Proces Plant Input Facade 1--	MS	-12	dBA	MS	-13	dBA	MS	-12	dBA	MS	-6	dBA
ProcessPlant_F2	Proces Plant Input Facade 2--	MS	6	dBA	MS	3	dBA	MS	-9	dBA	MS	-4	dBA
ProcessPlant_F3	Proces Plant Input Facade 3--	MS	4	dBA	MS	3	dBA	MS	2	dBA	MS	-20	dBA
ProcessPlant_F4	Proces Plant Input Facade 4--	MS	-8	dBA	MS	-9	dBA	MS	6	dBA	MS	-16	dBA
ProcessPlant_top	Proces Plant Input Top--	4555	8	dBA	4986	8	dBA	5376	8	dBA	10152	0	dBA
BackHoe_PC1250_q	Quarry Source - Production Backhoe--PC1250 (6.7m3)	5287	8	dBA	2232	18	dBA	5976	6	dBA	13031	-6	dBA
BackHoe_330_bp	Backhoe--330	4733	4	dBA	911	23	dBA	7378	-2	dBA	13221	-10	dBA
BlastLoaderCAT262_01_q	Blasting Loader--CAT 262	6112	-17	dBA	8850	-4	dBA	7453	-2	dBA	6629	-17	dBA
BlastTruck_F350_q	Blasters Truck--F350	MS	-9	dBA	MS	-8	dBA	MS	-9	dBA	MS	-18	dBA
Dozer_CAT_D6_bp	Dozer - D6--CAT D6	4469	16	dBA	1675	27	dBA	6822	10	dBA	12633	1	dBA
Dozer_CAT_D8_q	Dozer--CAT D8	6101	16	dBA	3042	24	dBA	5117	18	dBA	13401	4	dBA
DewateringPump_01_q	Dewatering Pump--DeWPump	6048	-4	dBA	2916	9	dBA	5243	-2	dBA	13426	-21	dBA
DewateringPump_02_q	Dewatering Pump--DeWPump	6242	-5	dBA	3203	7	dBA	4958	-1	dBA	13456	-21	dBA
DewateringPump_01_bp	Dewatering Pump--DeWPump	4501	-6	dBA	1706	17	dBA	6773	-7	dBA	12639	-20	dBA
DewateringPump_02_bp	Dewatering Pump--DeWPump	6016	-4	dBA	3555	5	dBA	4648	1	dBA	12915	-20	dBA
Loader_L1350_q	Quarry Source - Production Loader--L-1350 (23m3)	5317	20	dBA	2524	29	dBA	5713	19	dBA	12879	6	dBA
Loader_CAT966_bp	Borrow Source - Loader (FEL)--CAT 966	MS	-10	dBA	MS	2	dBA	MS	-17	dBA	MS	-27	dBA
PrimaryDrill_D65_01_q	Primary Drill--140mm SmartRoc D65	6025	22	dBA	2986	30	dBA	5172	24	dBA	13349	11	dBA
PrimaryDrill_D65_02_q	Primary Drill--140mm SmartRoc D65	6192	21	dBA	3125	30	dBA	5035	24	dBA	13451	11	dBA
PickUp_F150_q	Pick-up--F150	MS	-6	dBA	MS	-10	dBA	MS	-12	dBA	MS	-26	dBA
QuarryDieselGenset_200kW_OP&UG	DieselGen_200kW_Case--Diesel GenSet Casing	5463	2	dBA	2398	12	dBA	5787	0	dBA	13110	-10	dBA
RockCrusher_UD211_01_q	Rock Crusher--Sandvik UD211	6220	22	dBA	3069	30	dBA	5097	25	dBA	13526	12	dBA
ScreeningPlant_bp	Borrow Source - Screening Plant--	4642	17	dBA	1665	30	dBA	6724	14	dBA	12770	6	dBA
ScreeningPlant_bp	Borrow Source - Screening Plant--	6216	16	dBA	3061	24	dBA	5105	18	dBA	13527	6	dBA
ArticulatedTruckCAT740_01_tf	EJ Articulated Trucks--CAT 740	MS	11	dBA	MS	13	dBA	MS	5	dBA	MS	-5	dBA
Compactor_CAT64B_02_tf	Compactor--CAT CS64B	5754	0	dBA	3039	15	dBA	5154	8	dBA	12997	-4	dBA
Compactor_CAT64B_03_tf	Compactor--CAT CS64B	4760	9	dBA	4228	13	dBA	5142	8	dBA	11052	-3	dBA
Compactor_CAT64B_01_tf	Compactor--CAT CS64B	4882	8	dBA	1877	21	dBA	6423	6	dBA	12855	-4	dBA
Dozer_CAT_D6_01_tf	Dozer - D6--CAT D6	3409	16	dBA	3041	24	dBA	6761	15	dBA	11082	7	dBA
Dozer_CAT_D6_02_tf	Dozer - D6--CAT D6	3555	20	dBA	4013	19	dBA	6328	13	dBA	10353	6	dBA
Excavator_CAT_D6_01_tf	EX Dozer--CAT D6	5931	12	dBA	3609	18	dBA	4629	15	dBA	12773	1	dBA
Excavator_CAT_D6_02_tf	EX Dozer--CAT D6	3670	18	dBA	2359	23	dBA	6939	10	dBA	11714	2	dBA
Dozer_CAT_D8_tf	Dozer--CAT D8	4793	23	dBA	3741	26	dBA	5247	22	dBA	11496	11	dBA
DewateringPump_01_tf	Dewatering Pump--DeWPump	5104	-2	dBA	4293	2	dBA	4817	-1	dBA	11318	-19	dBA
DewateringPump_03_tf	Dewatering Pump--DeWPump	5457	-3	dBA	3906	1	dBA	4680	-1	dBA	12009	-20	dBA
DewateringPump_02_tf	Dewatering Pump--DeWPump	5702	-14	dBA	2810	8	dBA	5368	-3	dBA	13099	-22	dBA
Exca_CAT336_01_tf	Excavator--CAT 336	4158	10	dBA	3763	10	dBA	5793	6	dBA	10961	-3	dBA
Exca_CAT336_02_tf	Excavator--CAT 336	5721	-2	dBA	2963	14	dBA	5227	7	dBA	13015	-5	dBA
Exca_CAT336_03_tf	Excavator--CAT 336	4624	8	dBA	1846	19	dBA	6579	3	dBA	12655	-4	dBA
FlatBedBoomTruck_tf	Flat Bed or Boom Truck --	MS	-7	dBA	MS	-5	dBA	MS	-11	dBA	MS	-23	dBA
LightDutyPickUp_tf	Pick-up--F150	MS	-12	dBA	MS	4	dBA	MS	-15	dBA	MS	-27	dBA
Skidder_JD640_01_tf	Skidder--JD 640L	4923	13	dBA	3817	17	dBA	5114	14	dBA	11552	4	dBA
Skidder_JD640_02_tf	Skidder--JD 640L	4313	15	dBA	3786	16	dBA	5646	13	dBA	11059	4	dBA
TandemWaterTruck_2500_pr	Tadem Water Trucks-- 2500 gls	MS	3	dBA	MS	1	dBA	MS	1	dBA	MS	-14	dBA
TMF_DamDiesel_DieselGen_case	DieselGen_100kW_Case--Diesel GenSet Casing	4562	3	dBA	3666	5	dBA	5467	0	dBA	11357	-9	dBA
CFR_Plant	CFR Plant Area	4879	18	dBA	5990	16	dBA	5475	17	dBA	9350	10	dBA
CRF_conveyor	Stockpile Conveyor--w=1.35m; l=183m; 28.1m rise	MS	0	dBA	MS	-3	dBA	MS	-1	dBA	MS	-10	dBA
PastePlantDustCollector	Paste Plant Dust Collector	5274	-20	dBA	6663	-9	dBA	5545	-6	dBA	8925	-23	dBA

Notes on Table:
1. dBA = 1-hour energy equivalent sound (Leq (1-hr))
2. Height above local grade 3. MS = Mobile Source

Table A-2a: Peak Production Phase - Point of Reception Noise Impact

Daytime - LAeq,1hr

Project: Great Bear Project
Location: Red Lake, ON

			Residence/Cabin/Lodge/Camp			Residence/Cabin/Lodge/Camp			Residence/Cabin/Lodge/Camp			Residence/Cabin/Lodge/Camp		
			POR1	POR1	POR1	POR4	POR4	POR4	POR5	POR5	POR5	POR6	POR6	POR6
			Point of Reception ID			**Point of Reception ID**			**Point of Reception ID**			**Point of Reception ID**		
			POR1			**POR4**			**POR5**			**POR6**		
			Point of Reception Description			**Point of Reception Description**			**Point of Reception Description**			**Point of Reception Description**		
			Residence/Cabin/Lodge/Camp			**Residence/Cabin/Lodge/Camp**			**Residence/Cabin/Lodge/Camp**			**Residence/Cabin/Lodge/Camp**		
			Point of reception coordinates			**Point of reception coordinates**			**Point of reception coordinates**			**Point of reception coordinates**		
			X	**Y**	**Z [2]**	**X**	**Y**	**Z [2]**	**X**	**Y**	**Z [2]**	**X**	**Y**	**Z [2]**
			456965	5639223	372	451915	5639044	357	451671	5630891	354	465139	5634939	350
Source ID	**Source Description**	**Point of Reception 1**			**Point of Reception 4**			**Point of Reception 5**			**Point of Reception 6**		
		Distance [3] (m)	**Sound Level at PoR**	**Units [1] (dBA)**	**Distance [3] (m)**	**Sound Level at PoR**	**Units [1] (dBA)**	**Distance [3] (m)**	**Sound Level at PoR**	**Units [1] (dBA)**	**Distance [3] (m)**	**Sound Level at PoR**	**Units [1] (dBA)**
PastePlantFacade_Top	Paste Plant top--	5260	9	dBA	6686	6	dBA	5586	9	dBA	8879	3	dBA
PastePlant_F1	Paste Plant facade 1--	MS	6	dBA	MS	4	dBA	MS	6	dBA	MS	-10	dBA
PastePlant_F2	Paste Plant facade 2--	MS	-7	dBA	MS	-8	dBA	MS	7	dBA	MS	-9	dBA
PastePlant_F3	Paste Plant facade 3--	MS	-8	dBA	MS	-9	dBA	MS	-4	dBA	MS	0	dBA
PastePlant_F4	Paste Plant facade 4--	MS	8	dBA	MS	5	dBA	MS	-3	dBA	MS	2	dBA
SnapAirBlower_PastePlant	Paste Plant (Backfill) Outdoors--Snap Air Blower 1	5279	-47	dBA	6680	-45	dBA	5553	-33	dBA	8910	-50	dBA
TailingsStorageTankAgitator	Paste Plant (Backfill) Outdoors--Tailings Storage Tank Agitator	5302	-23	dBA	6730	-22	dBA	5575	-5	dBA	8869	-15	dBA
ThickenerRecirculatingPump	Paste Plant (Backfill) Outdoors--Thickener Recirculation Pump	5295	-24	dBA	6713	-23	dBA	5567	-7	dBA	8883	-29	dBA
ThickerUFPumpPastePlant	Paste Plant (Backfill) Outdoors--Thickener UF Pump	5287	-24	dBA	6696	-23	dBA	5560	-7	dBA	8897	-30	dBA
SubstationArea	Substation Area cumulative	2576	6	dBA	5669	-5	dBA	7882	-9	dBA	8265	-10	dBA
VentilationFan_LP_RAR2	VF_LP_RAR2--LP Return Air Raise	5743	7	dBA	8128	1	dBA	6790	4	dBA	7356	3	dBA
VentilationFan_LP_RAR2	VF_LP_RAR2--LP Return Air Raise	5742	7	dBA	8128	1	dBA	6790	4	dBA	7355	3	dBA
VentilationFan_VIG_FAR	VF_VIG_FAR--Viggo Fresh Air Raise	6055	2	dBA	8579	-5	dBA	7062	-1	dBA	7026	-1	dBA
VentilationFan_VIG_FAR	VF_VIG_FAR--Viggo Fresh Air Raise	6055	2	dBA	8579	-5	dBA	7062	-1	dBA	7026	-1	dBA
VentilationFan_VIG_RAR	VF_VIG_RAR--Viggo Return Air Raise	5915	-4	dBA	8474	-10	dBA	7096	-6	dBA	7011	-6	dBA
VentilationFan_VIG_RAR	VF_VIG_RAR--Viggo Return Air Raise	5915	-4	dBA	8474	-10	dBA	7096	-6	dBA	7011	-6	dBA
UOR12 NorthDam to Overburden#4	Articulating Truck--40t	MS	-17	dBA	MS	-4	dBA	MS	-21	dBA	MS	-32	dBA
UOR13 SouthDam to Overburden#3	Articulating Truck--40t	MS	-9	dBA	MS	-7	dBA	MS	-14	dBA	MS	-25	dBA
UOR14 SouthDam-spilleway to SouthD	Articulating Truck--40t	MS	2	dBA	MS	5	dBA	MS	4	dBA	MS	-12	dBA
UOR15 WestDam to Overburden#5	Articulating Truck--40t	MS	-20	dBA	MS	-12	dBA	MS	-18	dBA	MS	-34	dBA
UOR27 TMF Facility to NorthDam	Articulating Truck--40t	MS	-2	dBA	MS	7	dBA	MS	-6	dBA	MS	-16	dBA
UOR28 TMF Facility to SouthDam	Articulating Truck--40t	MS	-1	dBA	MS	2	dBA	MS	-5	dBA	MS	-16	dBA
UOR29 TMF Facilty to WestDam	Articulating Truck--40t	MS	-8	dBA	MS	-3	dBA	MS	-5	dBA	MS	-21	dBA
UOR30_40t_PAG_to_OVB1	Articulating Truck--40t	MS	-3	dBA	MS	-10	dBA	MS	-11	dBA	MS	-12	dBA
UOR16 TMF Facility to NorthDam	Haul Truck--CAT 777F	MS	16	dBA	MS	23	dBA	MS	12	dBA	MS	3	dBA
UOR17 BorrowSource#3 to NorthDam	Haul Truck--CAT 777F	MS	8	dBA	MS	21	dBA	MS	3	dBA	MS	-7	dBA
UOR18 NPAGStockpile to NorthDam	Haul Truck--CAT 777F	MS	25	dBA	MS	28	dBA	MS	20	dBA	MS	12	dBA
UOR19 TMF Facility to SouthDam	Haul Truck--CAT 777F	MS	15	dBA	MS	17	dBA	MS	11	dBA	MS	1	dBA
UOR20 BorrowSource#3 to SouthDam	Haul Truck--CAT 777F	MS	15	dBA	MS	25	dBA	MS	10	dBA	MS	0	dBA
UOR22 TMF Facility to WestDam	Haul Truck--CAT 777F	MS	10	dBA	MS	14	dBA	MS	13	dBA	MS	-1	dBA
UOR23 BorrowSource#3 to WestDam	Haul Truck--CAT 777F	MS	9	dBA	MS	22	dBA	MS	6	dBA	MS	-5	dBA
UOR24 NPAG Stockpile to WestDam	Haul Truck--CAT 777F	MS	23	dBA	MS	24	dBA	MS	22	dBA	MS	11	dBA
UOR25 NPAG Stockpile to LP Central	Haul Truck--CAT 777F	MS	20	dBA	MS	15	dBA	MS	14	dBA	MS	11	dBA
UOR26 NPAG Stockpile to Road Base	Haul Truck--CAT 777F	MS	20	dBA	MS	16	dBA	MS	14	dBA	MS	8	dBA
UOR1 LP Central to Overburden#1	Haul Truck--CAT 785	MS	24	dBA	MS	20	dBA	MS	20	dBA	MS	17	dBA
UOR10 AEXPortal to PAG Stockpile	Haul Truck--CAT 785	MS	19	dBA	MS	14	dBA	MS	14	dBA	MS	8	dBA
UOR11 AEXPortal to NPAG Stockpile	Haul Truck--CAT 785	MS	15	dBA	MS	10	dBA	MS	10	dBA	MS	4	dBA
UOR3 LP Central to NPAG Stockpile	Haul Truck--CAT 785	MS	27	dBA	MS	22	dBA	MS	21	dBA	MS	18	dBA
UOR4 LP Central to Crusher	Haul Truck--CAT 785	MS	25	dBA	MS	22	dBA	MS	23	dBA	MS	17	dBA
UOR5 LP Central to LGO Stockpile sma	Haul Truck--CAT 785	MS	18	dBA	MS	15	dBA	MS	15	dBA	MS	10	dBA
UOR6 LP Central to LGO Stockpile big	Haul Truck--CAT 785	MS	20	dBA	MS	16	dBA	MS	16	dBA	MS	13	dBA
UOR7 LGO Stockpile West to Crusher	Haul Truck--CAT 785	MS	10	dBA	MS	7	dBA	MS	8	dBA	MS	0	dBA
UOR8 LGO Stockpile East to Crusher	Haul Truck--CAT 785	MS	8	dBA	MS	6	dBA	MS	7	dBA	MS	-1	dBA
UOR9 AEXPortal to Crusher	Haul Truck--CAT 785	MS	19	dBA	MS	19	dBA	MS	20	dBA	MS	10	dBA
HVAC_Emul_in	HVAC_inlet--	5567	-10	dBA	8962	-18	dBA	8523	-17	dBA	5682	-10	dBA
HVAC_Emul_in	HVAC_inlet--	5570	-10	dBA	8965	-18	dBA	8523	-17	dBA	5681	-10	dBA
HVAC_Emul_in	HVAC_inlet--	5572	-10	dBA	8968	-18	dBA	8524	-17	dBA	5680	-10	dBA
HVAC_Emul_in	HVAC_inlet--	5575	-10	dBA	8970	-18	dBA	8524	-17	dBA	5678	-10	dBA
HVAC_Emul_out	HVAC_outlet--	5567	-12	dBA	8962	-21	dBA	8523	-20	dBA	5682	-12	dBA
HVAC_Emul_out	HVAC_outlet--	5570	-12	dBA	8965	-21	dBA	8523	-20	dBA	5681	-12	dBA
HVAC_Emul_out	HVAC_outlet--	5572	-12	dBA	8968	-21	dBA	8524	-20	dBA	5680	-12	dBA

Notes on Table:
1. dBA = 1-hour energy equivalent sound (Leq (1-hr))
2. Height above local grade 3. MS = Mobile Source

Table A-2a: Peak Production Phase - Point of Reception Noise Impact

Daytime - LAeq,1hr

Project: Great Bear Project
Location: Red Lake, ON

Source ID	Source Description	Residence/Cabin/Lodge/Camp POR1 POR1 POR1 Point of Reception ID POR1			Residence/Cabin/Lodge/Camp POR4 POR4 POR4 Point of Reception ID POR4			Residence/Cabin/Lodge/Camp POR5 POR5 POR5 Point of Reception ID POR5			Residence/Cabin/Lodge/Camp POR6 POR6 POR6 Point of Reception ID POR6		
		Point of Reception Description			Point of Reception Description			Point of Reception Description			Point of Reception Description		
		Residence/Cabin/Lodge/Camp			Residence/Cabin/Lodge/Camp			Residence/Cabin/Lodge/Camp			Residence/Cabin/Lodge/Camp		
		Point of reception coordinates			Point of reception coordinates			Point of reception coordinates			Point of reception coordinates		
		X	Y	Z [2]	X	Y	Z [2]	X	Y	Z [2]	X	Y	Z [2]
		456965	5639223	372	451915	5639044	357	451671	5630891	354	465139	5634939	350
		Point of Reception 1			Point of Reception 4			Point of Reception 5			Point of Reception 6		
		Distance [3] (m)	Sound Level at PoR	Units [1] (dBA)	Distance [3] (m)	Sound Level at PoR	Units [1] (dBA)	Distance [3] (m)	Sound Level at PoR	Units [1] (dBA)	Distance [3] (m)	Sound Level at PoR	Units [1] (dBA)
HVAC_Emul_out	HVAC_outlet--	5575	-12	dBA	8970	-21	dBA	8524	-20	dBA	5678	-12	dBA
HVAC_Mag_S_in	HVAC_inlet--	4799	-8	dBA	7933	-16	dBA	7858	-15	dBA	6596	-13	dBA
HVAC_Mag_S_in	HVAC_inlet--	4802	-8	dBA	7936	-16	dBA	7859	-15	dBA	6594	-20	dBA
HVAC_Mag_S_in	HVAC_inlet--	4804	-8	dBA	7938	-16	dBA	7859	-15	dBA	6592	-12	dBA
HVAC_Mag_S_in	HVAC_inlet--	4807	-8	dBA	7941	-16	dBA	7860	-15	dBA	6591	-12	dBA
HVAC_Mag_S_out	HVAC_outlet--	4799	-11	dBA	7933	-18	dBA	7858	-18	dBA	6596	-15	dBA
HVAC_Mag_S_out	HVAC_outlet--	4802	-11	dBA	7936	-18	dBA	7858	-18	dBA	6594	-24	dBA
HVAC_Mag_S_out	HVAC_outlet--	4804	-10	dBA	7938	-18	dBA	7859	-18	dBA	6593	-15	dBA
HVAC_Mag_S_out	HVAC_outlet--	4807	-10	dBA	7941	-18	dBA	7859	-18	dBA	6591	-15	dBA
Transformer_600kVA	600 kVA--Transformer	5577	-34	dBA	8976	-48	dBA	8532	-40	dBA	5671	-34	dBA
HVAC_Admin_in	HVAC_inlet--	5009	-8	dBA	5503	-10	dBA	5039	-8	dBA	10030	-20	dBA
HVAC_Admin_out	HVAC_outlet--	5009	-10	dBA	5506	-12	dBA	5040	-10	dBA	10027	-23	dBA
HVAC_CAMP_A_in	HVAC_inlet--	5065	-8	dBA	5502	-10	dBA	4973	-8	dBA	10087	-20	dBA
HVAC_CAMP_A_out	HVAC_outlet--	5068	-10	dBA	5503	-12	dBA	4971	-10	dBA	10089	-23	dBA
HVAC_CAMP_B_in	HVAC_inlet--	5067	-8	dBA	5519	-10	dBA	4978	-8	dBA	10071	-20	dBA
HVAC_CAMP_B_out	HVAC_outlet--	5069	-10	dBA	5520	-12	dBA	4976	-10	dBA	10071	-23	dBA
HVAC_CAMP_C_in	HVAC_inlet--	5067	-8	dBA	5533	-10	dBA	4984	-8	dBA	10055	-20	dBA
HVAC_CAMP_C_out	HVAC_outlet--	5070	-10	dBA	5535	-12	dBA	4982	-10	dBA	10056	-23	dBA
HVAC_Kitchen_in	HVAC_inlet--	5046	-8	dBA	5541	-10	dBA	5013	-8	dBA	10026	-20	dBA
HVAC_Kitchen_out	HVAC_outlet--	5046	-10	dBA	5544	-12	dBA	5014	-10	dBA	10023	-23	dBA
HVAC_Storage_in	HVAC_inlet--	4924	-8	dBA	5499	-10	dBA	5136	-8	dBA	9951	-20	dBA
HVAC_Storage_out	HVAC_outlet--	4924	-10	dBA	5502	-12	dBA	5138	-11	dBA	9948	-23	dBA
HVAC_TreatPlant_in	HVAC_inlet--	4996	-8	dBA	5620	-10	dBA	5108	-8	dBA	9890	-20	dBA
HVAC_TREATPlant_out	HVAC_outlet--	4997	-10	dBA	5623	-12	dBA	5109	-10	dBA	9886	-23	dBA
HVAC_Truck_S_in	HVAC_inlet--	4930	-8	dBA	5568	-10	dBA	5161	-8	dBA	9881	-19	dBA
VentilationFan_AEX	VentFan_aex--UG AEX Portal Ventilation Fan	4937	18	dBA	5785	22	dBA	5270	24	dBA	9644	12	dBA

Notes on Table:
1. dBA = 1-hour energy equivalent sound (Leq (1-hr))
2. Height above local grade 3. MS = Mobile Source

Table A-2b: Peak Production Phase - Point of Reception Noise Impact

Evening/Nighttime - LAeq,1hr

Project: Great Bear Project
Location: Red Lake, ON

Source ID	Source Description	Residence/Cabin/Lodge/Camp POR1 POR1 POR1 Point of Reception ID: POR1			Residence/Cabin/Lodge/Camp POR4 POR4 POR4 Point of Reception ID: POR4			Residence/Cabin/Lodge/Camp POR5 POR5 POR5 Point of Reception ID: POR5			Residence/Cabin/Lodge/Camp POR6 POR6 POR6 Point of Reception ID: POR6		
		Point of Reception 1			Point of Reception 4			Point of Reception 5			Point of Reception 6		
		Distance [3] (m)	Sound Level at PoR	Units [1] (dBA)	Distance [3] (m)	Sound Level at PoR	Units [1] (dBA)	Distance [3] (m)	Sound Level at PoR	Units [1] (dBA)	Distance [3] (m)	Sound Level at PoR	Units [1] (dBA)
TransferTowerPebbleCrusher_F1	Transfer Tower Pebble Crusher facade 1	MS	10	dBA	MS	10	dBA	MS	24	dBA	MS	2	dBA
TransferTowerPebbleCrusher_F2	Transfer Tower Pebble Crusher facade 2	MS	9	dBA	MS	9	dBA	MS	23	dBA	MS	15	dBA
TransferTowerPebbleCrusher_F3	Transfer Tower Pebble Crusher facade 3	MS	22	dBA	MS	24	dBA	MS	12	dBA	MS	16	dBA
TransferTowerPebbleCrusher_F4	Transfer Tower Pebble Crusher facade 4	MS	21	dBA	MS	23	dBA	MS	16	dBA	MS	1	dBA
TransferTowerPebbleCrusher_Top	Transfer Tower Pebble Crusher Top	4687	23	dBA	5060	18	dBA	5250	23	dBA	10193	15	dBA
PrimaryCrusher_F1	Primary Crusher facade 1--	MS	28	dBA	MS	12	dBA	MS	13	dBA	MS	19	dBA
PrimaryCrusher_F2	Primary Crusher facade 2--	MS	25	dBA	MS	24	dBA	MS	10	dBA	MS	16	dBA
PrimaryCrusher_F3	Primary Crusher facade 3--	MS	12	dBA	MS	27	dBA	MS	28	dBA	MS	4	dBA
PrimaryCrusher_F4	Primary Crusher facade 4--	MS	5	dBA	MS	6	dBA	MS	22	dBA	MS	-2	dBA
Primary_F4_binOP	PriCru_fac_4_binOp--	MS	7	dBA	MS	8	dBA	MS	21	dBA	MS	0	dBA
Primary Crusher_Top	Primary Crusher Top--	5035	25	dBA	5243	23	dBA	4915	25	dBA	10334	16	dBA
5 MW NaturalGasPower Casing - Powe	5 MW Natural Gas-Fired Reciprocating Engine Casing	2589	21	dBA	5629	9	dBA	7837	5	dBA	8311	3	dBA
5 MW NaturalGasPower Casing - Powe	5 MW Natural Gas-Fired Reciprocating Engine Casing	2613	21	dBA	5656	9	dBA	7832	5	dBA	8289	3	dBA
5 MW NaturalGasPower Casing - Powe	5 MW Natural Gas-Fired Reciprocating Engine Casing	2619	20	dBA	5662	9	dBA	7830	5	dBA	8283	3	dBA
5 MW NaturalGasPower Casing - Powe	5 MW Natural Gas-Fired Reciprocating Engine Casing	2625	20	dBA	5668	9	dBA	7828	5	dBA	8279	4	dBA
5 MW NaturalGasPower Casing - Powe	5 MW Natural Gas-Fired Reciprocating Engine Casing	2630	20	dBA	5673	9	dBA	7827	5	dBA	8274	4	dBA
5 MW NaturalGasPower Casing - Powe	5 MW Natural Gas-Fired Reciprocating Engine Casing	2634	20	dBA	5678	9	dBA	7826	5	dBA	8271	4	dBA
5 MW NaturalGasPower Casing - Powe	5 MW Natural Gas-Fired Reciprocating Engine Casing	2594	20	dBA	5636	9	dBA	7836	4	dBA	8306	3	dBA
5 MW NaturalGasPower Casing - Powe	5 MW Natural Gas-Fired Reciprocating Engine Casing	2601	21	dBA	5642	9	dBA	7834	4	dBA	8300	3	dBA
5 MW NaturalGasPower Casing - Powe	5 MW Natural Gas-Fired Reciprocating Engine Casing	2607	21	dBA	5649	9	dBA	7833	4	dBA	8294	3	dBA
5 MW Gen Exhaust - Power Plant	5 MW Natural Gas-Fired Reciprocating Engine outlet-- Exhaust	2606	15	dBA	5651	5	dBA	7835	1	dBA	8293	1	dBA
5 MW Gen Exhaust - Power Plant	5 MW Natural Gas-Fired Reciprocating Engine outlet-- Exhaust	2612	15	dBA	5657	5	dBA	7834	1	dBA	8287	1	dBA
5 MW Gen Exhaust - Power Plant	5 MW Natural Gas-Fired Reciprocating Engine outlet-- Exhaust	2618	15	dBA	5664	5	dBA	7832	1	dBA	8282	1	dBA
5 MW Gen Exhaust - Power Plant	5 MW Natural Gas-Fired Reciprocating Engine outlet-- Exhaust	2624	15	dBA	5669	5	dBA	7830	1	dBA	8277	1	dBA
5 MW Gen Exhaust - Power Plant	5 MW Natural Gas-Fired Reciprocating Engine outlet-- Exhaust	2629	15	dBA	5675	5	dBA	7829	1	dBA	8272	1	dBA
5 MW Gen Exhaust - Power Plant	5 MW Natural Gas-Fired Reciprocating Engine outlet-- Exhaust	2633	15	dBA	5679	5	dBA	7828	1	dBA	8269	1	dBA
5 MW Gen Exhaust - Power Plant	5 MW Natural Gas-Fired Reciprocating Engine outlet-- Exhaust	2593	15	dBA	5637	5	dBA	7838	1	dBA	8304	1	dBA
5 MW Gen Exhaust - Power Plant	5 MW Natural Gas-Fired Reciprocating Engine outlet-- Exhaust	2600	15	dBA	5644	5	dBA	7837	1	dBA	8298	1	dBA
5 MW Gen Exhaust - Power Plant	5 MW Natural Gas-Fired Reciprocating Engine outlet-- Exhaust	2587	15	dBA	5631	5	dBA	7840	1	dBA	8309	1	dBA
DieselGenSet_200 kW exhaust - Quarry	DieselGen_200kW_Ex--Diesel GenSet Exhaust	5465	-12	dBA	2401	-2	dBA	5784	-13	dBA	13110	-23	dBA
100 kW DieselGen exhaust - TMF Dam	DieselGen_100kW_Ex--Diesel GenSet Exhaust	4564	-7	dBA	3666	-3	dBA	5464	-10	dBA	11359	-22	dBA
VentilationFan_LP_RAR1	VF_LP_RAR1--LP Return Air Raise	4919	12	dBA	6511	7	dBA	5860	9	dBA	8748	1	dBA
VentilationFan_LP_RAR1	VF_LP_RAR1--LP Return Air Raise	4918	12	dBA	6510	7	dBA	5860	9	dBA	8749	1	dBA
DieselGenSet_50 kW casing - Chakuni I	DieselGen_50kW_Case--Diesel GenSet Casing	8721	-8	dBA	12993	-13	dBA	12491	-13	dBA	1734	13	dBA
DieselGenSet_50kW exhaust - Chakuni	DieselGen_50kW_Ex--Diesel GenSet Exhaust	8714	-20	dBA	12985	-26	dBA	12483	-26	dBA	1740	5	dBA
DieselGenSet_200 kW casing - Chakuni	DieselGen_200kW_Case--Diesel GenSet Casing	9644	-7	dBA	14042	-13	dBA	13587	-12	dBA	1154	19	dBA
DieselGenSet_200 kW exhaust - Chaku	DieselGen_200kW_Ex--Diesel GenSet Exhaust	9634	-17	dBA	14030	-23	dBA	13575	-22	dBA	1156	14	dBA
UOR21 NPAG Stockpile to SouthDam	Haul Truck--CAT 777F	MS	0	dBA	MS	0	dBA	MS	0	dBA	MS	0	dBA
UOR2 LP Central to PAG Stockpile	Haul Truck--CAT 785	MS	34	dBA	MS	29	dBA	MS	29	dBA	MS	26	dBA
VentilationFan_LP_HL_FAR1	VF_LP_HL_FAR1--LP Fresh Air Raise	5632	23	dBA	7289	18	dBA	5761	22	dBA	8489	15	dBA
VentilationFan_LP_HL_FAR1	VF_LP_HL_FAR1--LP Fresh Air Raise	5631	23	dBA	7289	18	dBA	5761	22	dBA	8489	15	dBA
HVAC_admin_B_in	HVAC_inlet--	4365	-6	dBA	4953	-8	dBA	5573	-10	dBA	10025	-20	dBA
HVAC_admin_B_in	HVAC_inlet--	4221	-5	dBA	4865	-9	dBA	5706	-10	dBA	9999	-20	dBA
HVAC_admin_B_in	HVAC_inlet--	4375	-6	dBA	5032	-8	dBA	5583	-10	dBA	9953	-20	dBA
HVAC_admin_out	HVAC_outlet--	4364	-8	dBA	4949	-10	dBA	5572	-12	dBA	10029	-23	dBA
HVAC_admin_out	HVAC_outlet--	4221	-7	dBA	4861	-11	dBA	5706	-12	dBA	10003	-23	dBA
HVAC_coreS_out	HVAC_outlet--	4377	-8	dBA	5033	-10	dBA	5581	-12	dBA	9954	-23	dBA
HVAC_cs_in	HVAC_inlet--	4322	-6	dBA	4788	-7	dBA	5583	-10	dBA	10155	-21	dBA
HVAC_cs_out	HVAC_outlet--	4322	-8	dBA	4784	-9	dBA	5583	-12	dBA	10159	-24	dBA

Point of Reception Description													
Residence/Cabin/Lodge/Camp													
Point of reception coordinates													
X	Y	Z [2]	X	Y	Z [2]	X	Y	Z [2]	X	Y	Z [2]
456965	5639223	372	451915	5639044	357	451671	5630891	354	465139	5634939	350

Notes on Table:
1. dBA = 1-hour energy equivalent sound (Leq (1-hr))
2. Height above local grade 3. MS = Mobile Source

Table A-2b: Peak Production Phase - Point of Reception Noise Impact

Evening/Nighttime - LAeq,1hr

Project: Great Bear Project
Location: Red Lake, ON

Source ID	Source Description	Residence/Cabin/Lodge/Camp POR1 POR1 POR1 Point of Reception ID POR1			Residence/Cabin/Lodge/Camp POR4 POR4 POR4 Point of Reception ID POR4			Residence/Cabin/Lodge/Camp POR5 POR5 POR5 Point of Reception ID POR5			Residence/Cabin/Lodge/Camp POR6 POR6 POR6 Point of Reception ID POR6		
		Point of Reception Description			Point of Reception Description			Point of Reception Description			Point of Reception Description		
		Residence/Cabin/Lodge/Camp			Residence/Cabin/Lodge/Camp			Residence/Cabin/Lodge/Camp			Residence/Cabin/Lodge/Camp		
		Point of reception coordinates			Point of reception coordinates			Point of reception coordinates			Point of reception coordinates		
		X	Y	Z [2]	X	Y	Z [2]	X	Y	Z [2]	X	Y	Z [2]
		456965	5639223	372	451915	5639044	357	451671	5630891	354	465139	5634939	350
		Point of Reception 1			Point of Reception 4			Point of Reception 5			Point of Reception 6		
		Distance [3] (m)	Sound Level at PoR	Units [1] (dBA)	Distance [3] (m)	Sound Level at PoR	Units [1] (dBA)	Distance [3] (m)	Sound Level at PoR	Units [1] (dBA)	Distance [3] (m)	Sound Level at PoR	Units [1] (dBA)
HVAC_CAMP_in	HVAC_inlet--	2026	5	dBA	5608	-10	dBA	8410	-17	dBA	8243	-16	dBA
HVAC_CAMP_in	HVAC_inlet--	2006	6	dBA	5601	-10	dBA	8424	-17	dBA	8250	-16	dBA
HVAC_CAMP_in	HVAC_inlet--	1987	6	dBA	5594	-10	dBA	8438	-17	dBA	8256	-16	dBA
HVAC_CAMP_in	HVAC_inlet--	1969	6	dBA	5588	-10	dBA	8451	-17	dBA	8262	-16	dBA
HVAC_CAMP_in	HVAC_inlet--	1951	6	dBA	5582	-10	dBA	8465	-17	dBA	8267	-16	dBA
HVAC_CAMP_in	HVAC_inlet--	1932	6	dBA	5576	-10	dBA	8479	-17	dBA	8272	-16	dBA
HVAC_CAMP_in	HVAC_inlet--	1915	6	dBA	5570	-10	dBA	8492	-17	dBA	8277	-16	dBA
HVAC_CAMP_in	HVAC_inlet--	1868	6	dBA	5556	-10	dBA	8528	-17	dBA	8291	-16	dBA
HVAC_CAMP_in	HVAC_inlet--	1849	7	dBA	5550	-10	dBA	8543	-17	dBA	8297	-16	dBA
HVAC_CAMP_in	HVAC_inlet--	1857	7	dBA	5606	-10	dBA	8581	-17	dBA	8241	-16	dBA
HVAC_CAMP_in	HVAC_inlet--	1875	6	dBA	5611	-10	dBA	8567	-17	dBA	8236	-16	dBA
HVAC_CAMP_in	HVAC_inlet--	1925	6	dBA	5639	-10	dBA	8540	-17	dBA	8209	-16	dBA
HVAC_CAMP_in	HVAC_inlet--	1942	6	dBA	5644	-10	dBA	8527	-17	dBA	8203	-16	dBA
HVAC_CAMP_in	HVAC_inlet--	1962	6	dBA	5651	-10	dBA	8512	-17	dBA	8197	-16	dBA
HVAC_CAMP_in	HVAC_inlet--	1979	6	dBA	5656	-10	dBA	8499	-17	dBA	8192	-16	dBA
HVAC_CAMP_in	HVAC_inlet--	1998	6	dBA	5662	-10	dBA	8485	-17	dBA	8187	-16	dBA
HVAC_CAMP_in	HVAC_inlet--	2017	5	dBA	5669	-10	dBA	8471	-17	dBA	8181	-16	dBA
HVAC_CAMP_in	HVAC_inlet--	2035	5	dBA	5675	-10	dBA	8457	-17	dBA	8176	-16	dBA
HVAC_CAMP_in	HVAC_inlet--	4569	-8	dBA	5006	-8	dBA	5365	-9	dBA	10144	-20	dBA
HVAC_CAMP_out	HVAC_outlet--	2026	3	dBA	5615	-12	dBA	8415	-20	dBA	8236	-19	dBA
HVAC_CAMP_out	HVAC_outlet--	2007	3	dBA	5609	-12	dBA	8429	-20	dBA	8242	-19	dBA
HVAC_CAMP_out	HVAC_outlet--	1989	3	dBA	5603	-12	dBA	8443	-20	dBA	8247	-19	dBA
HVAC_CAMP_out	HVAC_outlet--	1970	3	dBA	5597	-12	dBA	8458	-20	dBA	8252	-19	dBA
HVAC_CAMP_out	HVAC_outlet--	1953	3	dBA	5592	-12	dBA	8471	-20	dBA	8257	-19	dBA
HVAC_CAMP_out	HVAC_outlet--	1935	4	dBA	5586	-12	dBA	8484	-20	dBA	8262	-19	dBA
HVAC_CAMP_out	HVAC_outlet--	1916	4	dBA	5580	-12	dBA	8499	-20	dBA	8268	-19	dBA
HVAC_CAMP_out	HVAC_outlet--	1870	4	dBA	5565	-12	dBA	8534	-20	dBA	8282	-19	dBA
HVAC_CAMP_out	HVAC_outlet--	1851	4	dBA	5559	-12	dBA	8549	-20	dBA	8288	-19	dBA
HVAC_CAMP_out	HVAC_outlet--	1858	4	dBA	5612	-12	dBA	8586	-20	dBA	8235	-19	dBA
HVAC_CAMP_out	HVAC_outlet--	1876	4	dBA	5617	-12	dBA	8572	-20	dBA	8230	-19	dBA
HVAC_CAMP_out	HVAC_outlet--	1925	4	dBA	5645	-12	dBA	8545	-20	dBA	8202	-19	dBA
HVAC_CAMP_out	HVAC_outlet--	1943	3	dBA	5650	-12	dBA	8531	-20	dBA	8197	-19	dBA
HVAC_CAMP_out	HVAC_outlet--	1963	3	dBA	5656	-12	dBA	8516	-20	dBA	8192	-19	dBA
HVAC_CAMP_out	HVAC_outlet--	1980	3	dBA	5662	-12	dBA	8504	-20	dBA	8186	-19	dBA
HVAC_CAMP_out	HVAC_outlet--	1998	3	dBA	5668	-12	dBA	8490	-20	dBA	8181	-19	dBA
HVAC_CAMP_out	HVAC_outlet--	2017	3	dBA	5675	-12	dBA	8476	-20	dBA	8175	-19	dBA
HVAC_CAMP_out	HVAC_outlet--	2036	3	dBA	5682	-12	dBA	8462	-20	dBA	8169	-19	dBA
HVAC_CAMP_out	HVAC_outlet--	4567	-10	dBA	5011	-11	dBA	5369	-11	dBA	10136	-23	dBA
HVAC_st_in	HVAC_inlet--	4249	-5	dBA	4812	-7	dBA	5665	-10	dBA	10074	-20	dBA
HVAC_st_out	HVAC_outlet--	4248	-7	dBA	4808	-9	dBA	5665	-12	dBA	10077	-23	dBA
HVAC_TireRS_in	HVAC_inlet--	4178	-5	dBA	4697	-7	dBA	5720	-10	dBA	10132	-20	dBA
HVAC_TireRS_out	HVAC_outlet--	4178	-7	dBA	4692	-9	dBA	5719	-12	dBA	10137	-23	dBA
HVAC_warmSB_in	HVAC_inlet--	4350	-6	dBA	4891	-8	dBA	5574	-10	dBA	10076	-20	dBA
HVAC_warmSB_in	HVAC_inlet--	4298	-5	dBA	4875	-10	dBA	5626	-10	dBA	10050	-20	dBA
HVAC_warmSB_out	HVAC_outlet--	4348	-8	dBA	4884	-10	dBA	5574	-12	dBA	10081	-23	dBA
HVAC_warmSB_out	HVAC_outlet--	4297	-8	dBA	4869	-14	dBA	5626	-12	dBA	10055	-23	dBA
UG_Truck_50t	UG Truck 50t	MS	-20	dBA	MS	-18	dBA	MS	-16	dBA	MS	-27	dBA
UG_BoomTruck	UG Boom Truck	MS	-21	dBA	MS	-23	dBA	MS	-20	dBA	MS	-32	dBA
UG_BusPersonnel	UG Bus passenger	MS	-28	dBA	MS	-29	dBA	MS	-25	dBA	MS	-37	dBA
UG_CRF_Truck	UG CRF Truck	MS	-18	dBA	MS	-17	dBA	MS	-15	dBA	MS	-26	dBA
UG_EmulsionDevCarrier	UG Emulsion Dev-carrier	MS	-16	dBA	MS	-19	dBA	MS	-16	dBA	MS	-27	dBA

Notes on Table:
1. dBA = 1-hour energy equivalent sound (Leq (1-hr))
2. Height above local grade 3. MS = Mobile Source

Table A-2b: Peak Production Phase - Point of Reception Noise Impact

Evening/Nighttime - LAeq,1hr

Project: Great Bear Project
Location: Red Lake, ON

Source ID	Source Description	Residence/Cabin/Lodge/Camp POR1 POR1 POR1 Point of Reception ID POR1			Residence/Cabin/Lodge/Camp POR4 POR4 POR4 Point of Reception ID POR4			Residence/Cabin/Lodge/Camp POR5 POR5 POR5 Point of Reception ID POR5			Residence/Cabin/Lodge/Camp POR6 POR6 POR6 Point of Reception ID POR6		
		Point of Reception Description			Point of Reception Description			Point of Reception Description			Point of Reception Description		
		Residence/Cabin/Lodge/Camp			Residence/Cabin/Lodge/Camp			Residence/Cabin/Lodge/Camp			Residence/Cabin/Lodge/Camp		
		Point of reception coordinates			Point of reception coordinates			Point of reception coordinates			Point of reception coordinates		
		X	Y	Z [2]	X	Y	Z [2]	X	Y	Z [2]	X	Y	Z [2]
		456965	5639223	372	451915	5639044	357	451671	5630891	354	465139	5634939	350
		Point of Reception 1			Point of Reception 4			Point of Reception 5			Point of Reception 6		
		Distance [3] (m)	Sound Level at PoR	Units [1] (dBA)	Distance [3] (m)	Sound Level at PoR	Units [1] (dBA)	Distance [3] (m)	Sound Level at PoR	Units [1] (dBA)	Distance [3] (m)	Sound Level at PoR	Units [1] (dBA)
UG_EmulsionProdCarrier	UG Emulsion Prod-carrier	MS	-30	dBA	MS	-32	dBA	MS	-29	dBA	MS	-41	dBA
UG_TractorForkBackhoe	UG Tractor with Fork and Backhoe	MS	-14	dBA	MS	-16	dBA	MS	-14	dBA	MS	-23	dBA
UG_FuelNLube	UG Boom Truck	MS	-37	dBA	MS	-39	dBA	MS	-36	dBA	MS	-48	dBA
UG_Grader	UG Grader	MS	-23	dBA	MS	-25	dBA	MS	-20	dBA	MS	-32	dBA
UG_JeepPersonnel	UG Jeep personnel carrier	MS	-23	dBA	MS	-26	dBA	MS	-23	dBA	MS	-35	dBA
UG_JeepVehicle	UG Jeep maintenance vehicle	MS	-34	dBA	MS	-37	dBA	MS	-34	dBA	MS	-45	dBA
UG_MobileCrane	UG Terrain mobile crane	MS	-30	dBA	MS	-32	dBA	MS	-30	dBA	MS	-39	dBA
UG_RoughTerrainFork	UG Rough Terrain Forklift	MS	-17	dBA	MS	-20	dBA	MS	-17	dBA	MS	-25	dBA
UG_Scissor	UG Scissor lift	MS	-9	dBA	MS	-11	dBA	MS	-8	dBA	MS	-17	dBA
UG_Shotcrete	UG Shotcrete Sprayer	MS	-22	dBA	MS	-22	dBA	MS	-20	dBA	MS	-31	dBA
UG_TransMixer	UG Transmixer	MS	-23	dBA	MS	-22	dBA	MS	-21	dBA	MS	-31	dBA
UG_WaterSpryer	UG Water spryer w/carrier	MS	-21	dBA	MS	-23	dBA	MS	-21	dBA	MS	-29	dBA
BlastLoaderCAT262_01_pp	Blasting Loader--CAT 262	6112	-12	dBA	8850	-3	dBA	7453	-1	dBA	6629	-15	dBA
BlastLoaderCAT262_02_pp	Blasting Loader--CAT 262	5283	-17	dBA	7466	-7	dBA	6486	-19	dBA	7823	-21	dBA
BlasterTruck_01_pp	Blasters Truck--F350	MS	0	dBA	MS	0	dBA	MS	0	dBA	MS	0	dBA
BlasterTruck_02_pp	Blasters Truck--F350	MS	0	dBA	MS	0	dBA	MS	0	dBA	MS	0	dBA
BusPersonnel_01_pp	Bus (60 seats)--BusPersonnel	MS	-4	dBA	MS	-14	dBA	MS	-16	dBA	MS	-20	dBA
BusPersonnel_02_pp	Bus (60 seats)--BusPersonnel	MS	-25	dBA	MS	-25	dBA	MS	-23	dBA	MS	-30	dBA
BusPersonnel_03_pp	Bus (60 seats)--BusPersonnel	MS	-10	dBA	MS	-14	dBA	MS	-14	dBA	MS	-22	dBA
BusPersonnel_04_pp	UG Bus passenger	MS	-18	dBA	MS	-26	dBA	MS	-26	dBA	MS	-27	dBA
ContainerTrailerTruck_pp	Container Trailer Truck--ContTT	MS	0	dBA	MS	0	dBA	MS	0	dBA	MS	0	dBA
CrusherQJ341_PP	Crusher--Sandvik QJ341	5060	4	dBA	7008	0	dBA	6215	11	dBA	8234	-2	dBA
Dozer_CAT_D10_02_pp	Dozer - D10--CAT D10	3392	26	dBA	6069	19	dBA	7316	16	dBA	8125	15	dBA
Dozer_CAT_D10_03_pp	Dozer - D10--CAT D10	4323	20	dBA	5466	17	dBA	5816	16	dBA	9450	10	dBA
Dozer_CAT_D10_pp	Dozer - D10--CAT D10	4152	24	dBA	5766	19	dBA	6192	19	dBA	8976	13	dBA
Dozer_CAT_D6_01_pp	Dozer - D6--CAT D6	4049	18	dBA	7214	10	dBA	7820	9	dBA	7048	11	dBA
Dozer_CAT_D6_02_pp	Dozer - D6--CAT D6	4223	17	dBA	7191	10	dBA	7556	10	dBA	7205	10	dBA
Dozer_CAT_D6_03_pp	Dozer - D6--CAT D6	3436	20	dBA	5207	15	dBA	6672	12	dBA	9121	7	dBA
Dozer_CAT_D8_pit	Dozer--CAT D8	5044	4	dBA	7020	9	dBA	6241	14	dBA	8200	1	dBA
DewateringPump_01_pp	Dewatering Pump--DeWPump	4777	0	dBA	6294	-5	dBA	5843	-5	dBA	8883	-14	dBA
DewateringPump_02_pp	Dewatering Pump--DeWPump	5720	-13	dBA	7869	-11	dBA	6427	-7	dBA	7738	-11	dBA
DewateringPump_03_pp	Dewatering Pump--DeWPump	4693	-1	dBA	6309	-6	dBA	5961	-5	dBA	8785	-14	dBA
DewateringPump_04_pp	Dewatering Pump--DeWPump	5059	-2	dBA	8027	-11	dBA	7631	-10	dBA	6708	-8	dBA
DewateringPump_05_pp	Dewatering Pump--DeWPump	5690	-14	dBA	7798	-11	dBA	6365	-6	dBA	7811	-11	dBA
DewateringPump_06_pp	Dewatering Pump--DeWPump	6094	-24	dBA	8848	-14	dBA	7477	-10	dBA	6607	-26	dBA
DewateringPump_07_pp	Dewatering Pump--DeWPump	5378	-3	dBA	7356	-10	dBA	6201	-6	dBA	8092	-12	dBA
DewateringPump_08_pp	Dewatering Pump--DeWPump	4676	-1	dBA	6843	-8	dBA	6524	-7	dBA	8075	-12	dBA
DewateringPump_09_pp	Dewatering Pump--DeWPump	5938	-12	dBA	8389	-12	dBA	6920	-8	dBA	7186	-9	dBA
DewateringPump_10_pp	Dewatering Pump--DeWPump	6054	-6	dBA	8901	-14	dBA	7635	-10	dBA	6452	-9	dBA
DiePump_01_pp	Diesel Pump--HL250M	5288	-40	dBA	7444	-31	dBA	6447	-43	dBA	7862	-46	dBA
DiePump_02_pp	Diesel Pump--HL250M	5298	-21	dBA	7133	-27	dBA	6033	-40	dBA	8317	-32	dBA
DiePump_03_pp	Diesel Pump--HL250M	6082	-37	dBA	8886	-32	dBA	7565	-28	dBA	6519	-43	dBA
DiePump_04_pp	Diesel Pump--HL250M	5473	-30	dBA	7832	-29	dBA	6730	-26	dBA	7489	-46	dBA
DiePump_05_pp	Diesel Pump--HL250M	6127	-42	dBA	8860	-32	dBA	7448	-28	dBA	6633	-44	dBA
Excavator_CAT374_01_pp	Excavator--CAT 374	4637	5	dBA	6583	0	dBA	6294	1	dBA	8384	-3	dBA
Excavator_CAT374_02_pp	Excavator--CAT 374	5666	2	dBA	7819	-2	dBA	6431	1	dBA	7748	-2	dBA
Excavator_CAT374_03_pp	Excavator--CAT 374	6131	-17	dBA	8895	-5	dBA	7504	-2	dBA	6576	-19	dBA
ExploMagazine_DieselGen_100kW_case	DieselGen_100kW_Case--Diesel GenSet Casing	4897	1	dBA	7815	-5	dBA	7530	-4	dBA	6876	-3	dBA
ExploMagazineDieselGenSet_100kW_ex	DieselGen_100kW_Ex--Diesel GenSet Exhaust	4899	-9	dBA	7816	-17	dBA	7528	-16	dBA	6877	-15	dBA
ExploStorage_DieselGen_100kW_case	DieselGen_100kW_Case--Diesel GenSet Casing	5379	0	dBA	8682	-6	dBA	8288	-5	dBA	5961	-2	dBA
ExploStorageDieselGenSet_100kW_ex	DieselGen_100kW_Ex--Diesel GenSet Exhaust	5380	-11	dBA	8685	-18	dBA	8290	-18	dBA	5958	-12	dBA

Notes on Table:
1. dBA = 1-hour energy equivalent sound (Leq (1-hr))
2. Height above local grade 3. MS = Mobile Source

Table A-2b: Peak Production Phase - Point of Reception Noise Impact

Evening/Nighttime - LAeq,1hr

Project: Great Bear Project
Location: Red Lake, ON

	Residence/Cabin/Lodge/Camp	Residence/Cabin/Lodge/Camp	Residence/Cabin/Lodge/Camp	Residence/Cabin/Lodge/Camp
	POR1 POR1 POR1	POR4 POR4 POR4	POR5 POR5 POR5	POR6 POR6 POR6
Point of Reception ID	**POR1**	**POR4**	**POR5**	**POR6**
Point of Reception Description	**Residence/Cabin/Lodge/Camp**	**Residence/Cabin/Lodge/Camp**	**Residence/Cabin/Lodge/Camp**	**Residence/Cabin/Lodge/Camp**
Point of reception coordinates				
X	456965	451915	451671	465139
Y	5639223	5639044	5630891	5634939
Z [2]	372	357	354	350

Source ID	Source Description	Point of Reception 1			Point of Reception 4			Point of Reception 5			Point of Reception 6		
		Distance [3] (m)	Sound Level at PoR	Units [1] (dBA)	Distance [3] (m)	Sound Level at PoR	Units [1] (dBA)	Distance [3] (m)	Sound Level at PoR	Units [1] (dBA)	Distance [3] (m)	Sound Level at PoR	Units [1] (dBA)
CrushFeeder_CAT777_idling	Haul Truck--CAT 777F	5053	3	dBA	5258	5	dBA	4899	19	dBA	10336	8	dBA
FrontLoaderSmallerCAT966_01_pp	Front End Loader (smaller)--CAT 966	5275	12	dBA	7232	8	dBA	6185	0	dBA	8153	-11	dBA
FrontLoaderSmallerCAT966_02_pp	Front End Loader (smaller)--CAT 966	5478	12	dBA	7565	8	dBA	6339	-4	dBA	7904	7	dBA
FrontLoaderSmallerCAT966_03_pp	Front End Loader (smaller)--CAT 966	6110	-3	dBA	8876	6	dBA	7504	9	dBA	6579	-8	dBA
FrontLoaderSmallerCAT966_04_pp	Front End Loader (smaller)--CAT 966	6087	-8	dBA	8825	6	dBA	7448	8	dBA	6637	-8	dBA
FlatDeckTruck_pp	Flat Deck Truck--FlatDT	MS	0	dBA	MS	0	dBA	MS	0	dBA	MS	0	dBA
FrontLoaderCAT993_01_pp	Front End Loader--CAT993	6150	-3	dBA	8905	9	dBA	7494	11	dBA	6585	-5	dBA
FrontLoaderCAT993_02_pp	Front End Loader--CAT993	5168	-2	dBA	7443	11	dBA	6613	-2	dBA	7729	-8	dBA
FrontLoaderCAT993_03_pp	Front End Loader--CAT993	5080	-2	dBA	7035	-6	dBA	6220	1	dBA	8218	-9	dBA
Fork_CATDP4055_01_pp	Forklift--Cat DP40-55(C)N3, 5.5t	4321	1	dBA	4939	-5	dBA	5617	-5	dBA	10003	-9	dBA
Fork_CATDP4055_02_pp	Forklift--Cat DP40-55(C)N3, 5.5t	4232	1	dBA	4786	0	dBA	5677	-2	dBA	10087	-23	dBA
Fork_CATDP4055_03_pp	Forklift--Cat DP40-55(C)N3, 5.5t	4479	0	dBA	4941	-1	dBA	5446	-14	dBA	10132	-21	dBA
Fork_CATDP4055_04_pp	Forklift--Cat DP40-55(C)N3, 5.5t	5071	-21	dBA	7160	-13	dBA	6378	-17	dBA	8033	-27	dBA
Fork_CATDP4055_05_pp	Forklift--Cat DP40-55(C)N3, 5.5t	4479	0	dBA	4941	-1	dBA	5446	-14	dBA	10132	-21	dBA
FuelTankerTruck_CAT740_01_pp	Fuel Tanker Truck (30,000 L)--CAT 740	MS	0	dBA	MS	0	dBA	MS	0	dBA	MS	0	dBA
FuelTankerTruck_02_pp	Fuel Tanker Truck (30,000 L)--CAT 740	MS	0	dBA	MS	0	dBA	MS	0	dBA	MS	0	dBA
FusionMachine_01_pp	Fusion Machine--Ritmo Delta 250	5276	-35	dBA	7516	-31	dBA	6565	-38	dBA	7742	-43	dBA
FusionMachine_02_pp	Fusion Machine--Ritmo Delta 250	6108	-36	dBA	8864	-28	dBA	7484	-24	dBA	6598	-40	dBA
FusionMachine_03_pp	Fusion Machine--Ritmo Delta 250	4970	-33	dBA	6970	-41	dBA	6288	-26	dBA	8191	-45	dBA
HighCubeTruck_pp	High Cube Truck--Ford F-650 SD DIESEL	MS	0	dBA	MS	0	dBA	MS	0	dBA	MS	0	dBA
IntegratedToolCarrier_pp	Integrated Tool Carrier--WA200-7	3025	10	dBA	5434	3	dBA	7237	0	dBA	8674	-3	dBA
LowboyNTractor_75t_pp	Lowboy and Tractor--75ton - 100ton	MS	0	dBA	MS	0	dBA	MS	0	dBA	MS	0	dBA
MechanicsTruck_01_pp	Mechanics Truck--Mtruck	MS	0	dBA	MS	0	dBA	MS	0	dBA	MS	0	dBA
MechanicsTruck_02_pp	Mechanics Truck--Mtruck	MS	0	dBA	MS	0	dBA	MS	0	dBA	MS	0	dBA
MechanicsTruck_03_pp	Mechanics Truck--Mtruck	MS	0	dBA	MS	0	dBA	MS	0	dBA	MS	0	dBA
MechanicsTruck_04_pp	Mechanics Truck--Mtruck	MS	0	dBA	MS	0	dBA	MS	0	dBA	MS	0	dBA
MechanicsTruck_05_pp	Mechanics Truck--Mtruck	MS	0	dBA	MS	0	dBA	MS	0	dBA	MS	0	dBA
MobileCrane150t_pp	150t Mobile Crane--MobCrane150t	4498	1	dBA	5021	-4	dBA	5446	-17	dBA	10067	-10	dBA
MobileCrane50t_01_pp	50t Mobile Crane--Tadano GR-500XL	4492	11	dBA	4925	10	dBA	5429	-10	dBA	10160	-5	dBA
MobileCrane50t_02_pp	50t Mobile Crane--Tadano GR-500XL	4488	6	dBA	4990	0	dBA	5449	-4	dBA	10090	-6	dBA
OreControlDrill_01_pp	Ore Control Drill--Explorac E100	5070	-1	dBA	7222	12	dBA	6455	13	dBA	7942	-7	dBA
OreControlDrill_02_pp	Ore Control Drill--Explorac E100	6088	0	dBA	8811	10	dBA	7420	12	dBA	6664	-4	dBA
OreControlDrill_03_pp	Ore Control Drill--Explorac E100	5490	8	dBA	7686	11	dBA	6495	-6	dBA	7734	-1	dBA
OreControlDrill_04_pp	Ore Control Drill--Explorac E100	5490	8	dBA	7686	11	dBA	6495	-6	dBA	7734	-1	dBA
OreControlDrill_05_pp	Ore Control Drill--Explorac E100	5490	8	dBA	7686	11	dBA	6495	-6	dBA	7734	-1	dBA
PrimaryDrill_D65_01_pp	Primary Drill--140mm SmartRoc D65	5162	8	dBA	7260	17	dBA	6378	14	dBA	7987	-1	dBA
PrimaryDrill_D65_02_pp	Primary Drill--140mm SmartRoc D65	5376	2	dBA	7603	16	dBA	6543	0	dBA	7727	-2	dBA
PrimaryDrill_D65_03_pp	Primary Drill--140mm SmartRoc D65	6099	5	dBA	8807	16	dBA	7396	18	dBA	6687	5	dBA
ProductionDrill_PV235_01_pp	Production Drill--Epiroc Pit Viper PV235	5121	-4	dBA	7165	-1	dBA	6318	-4	dBA	8079	-10	dBA
ProductionDrill_PV235_02_pp	Production Drill--Epiroc Pit Viper PV235	5336	-3	dBA	7520	9	dBA	6482	11	dBA	7804	-7	dBA
ProductionDrill_PV235_03_pp	Production Drill--Epiroc Pit Viper PV235	6059	-6	dBA	8775	8	dBA	7400	11	dBA	6688	-4	dBA
ProductionDrill_PV235_04_pp	Production Drill--Epiroc Pit Viper PV235	5037	-4	dBA	6959	-8	dBA	6187	5	dBA	8277	-10	dBA
ProductionDrill_PV235_05_pp	Production Drill--Epiroc Pit Viper PV235	5394	-5	dBA	7694	10	dBA	6647	2	dBA	7610	-9	dBA
ProductionDrill_PV235_06_pp	Production Drill--Epiroc Pit Viper PV235	5063	-4	dBA	7046	-7	dBA	6254	1	dBA	8186	-10	dBA
PortableWaterTruck_pp	Portable Water Truck--PoWT	MS	0	dBA	MS	0	dBA	MS	0	dBA	MS	0	dBA
PickUp_F150_01_pp	Pick-up--F150	MS	2	dBA	MS	-7	dBA	MS	-10	dBA	MS	-14	dBA
PickUp_F150_02_pp	Pick-up--F150	MS	2	dBA	MS	10	dBA	MS	-3	dBA	MS	-17	dBA
PickUp_F150_03_pp	Pick-up--F150	MS	3	dBA	MS	-4	dBA	MS	-5	dBA	MS	-14	dBA
RoadGrader_CAT16_01_pp	Road Grader--CAT 16	MS	18	dBA	MS	6	dBA	MS	2	dBA	MS	0	dBA
RoadGrader_CAT16_02_pp	Road Grader--CAT 16	MS	6	dBA	MS	15	dBA	MS	8	dBA	MS	-7	dBA
RoadGrader_CAT16_03_pp	Road Grader--CAT 16	MS	4	dBA	MS	15	dBA	MS	-1	dBA	MS	-11	dBA

Notes on Table:
1. dBA = 1-hour energy equivalent sound (Leq (1-hr))
2. Height above local grade 3. MS = Mobile Source

Table A-2b: Peak Production Phase - Point of Reception Noise Impact

Evening/Nighttime - LAeq,1hr

Project: Great Bear Project
Location: Red Lake, ON

	Residence/Cabin/Lodge/Camp	Residence/Cabin/Lodge/Camp	Residence/Cabin/Lodge/Camp	Residence/Cabin/Lodge/Camp
	POR1 POR1 POR1	POR4 POR4 POR4	POR5 POR5 POR5	POR6 POR6 POR6
Point of Reception ID	**POR1**	**POR4**	**POR5**	**POR6**
Point of Reception Description	**Residence/Cabin/Lodge/Camp**	**Residence/Cabin/Lodge/Camp**	**Residence/Cabin/Lodge/Camp**	**Residence/Cabin/Lodge/Camp**
Point of reception coordinates				
X	456965	451915	451671	465139
Y	5639223	5639044	5630891	5634939
Z [2]	372	357	354	350

Source ID	Source Description	Point of Reception 1			Point of Reception 4			Point of Reception 5			Point of Reception 6		
		Distance [3] (m)	Sound Level at PoR	Units [1] (dBA)	Distance [3] (m)	Sound Level at PoR	Units [1] (dBA)	Distance [3] (m)	Sound Level at PoR	Units [1] (dBA)	Distance [3] (m)	Sound Level at PoR	Units [1] (dBA)
SewageCollectionTruck_pp	Sewage Collection Truck--SewColTruck	MS	0	dBA	MS	0	dBA	MS	0	dBA	MS	0	dBA
DieselGenset_200kW_Shaft	DieselGen_200kW_Case--Diesel GenSet Casing	4980	0	dBA	6400	0	dBA	5677	0	dBA	8952	0	dBA
DieselGenSet_200kW_Shaft_ex	DieselGen_200kW_Ex--Diesel GenSet Exhaust	4980	0	dBA	6400	0	dBA	5678	0	dBA	8951	0	dBA
Shovel_12m3_pp	Shovel 12.0 m3--CAT 6020	5305	1	dBA	7550	14	dBA	6566	10	dBA	7723	-5	dBA
Shovel_10m3_pp	Shovel 10.0 m3--CAT 6015	6077	-6	dBA	8788	8	dBA	7395	10	dBA	6691	-5	dBA
Shovel_16m3_pp	Shovel 16.5 m3--CAT 6030	5063	-1	dBA	7072	-5	dBA	6286	3	dBA	8148	-8	dBA
Shovel_16m3_pp	Shovel 16.5 m3--CAT 6030	5314	-2	dBA	7613	13	dBA	6645	8	dBA	7640	-7	dBA
SkidSteer_CAT650_01_pp	Skid Steer--Bobcat S650	4305	3	dBA	4737	2	dBA	5593	0	dBA	10191	-12	dBA
SkidSteer_CAT650_02_pp	Skid Steer--Bobcat S650	4467	1	dBA	4950	0	dBA	5462	-15	dBA	10113	-8	dBA
SnowWaterTruck_01_pp	Snow Plow/Water Truck--T880	MS	0	dBA	MS	0	dBA	MS	0	dBA	MS	0	dBA
SnowWaterTruck_02_pp	Snow Plow/Water Truck--T880	MS	0	dBA	MS	0	dBA	MS	0	dBA	MS	0	dBA
TireManipulator_WA500_pp	Tire Manipulator--WA-500-7	4182	10	dBA	4724	-5	dBA	5719	8	dBA	10109	0	dBA
TLB_CAT422_01_pp	TLB--Cat 422F2	3139	4	dBA	5465	-2	dBA	7133	-5	dBA	8691	-8	dBA
TLB_CAT422_02_pp	TLB--Cat 422F2	3027	5	dBA	5500	-2	dBA	7277	-5	dBA	8603	-8	dBA
DixieWaterPumpDieselGen_100kW_cas	DieselGen_100kW_Case--Diesel GenSet Casing	5511	-2	dBA	6390	-3	dBA	4980	1	dBA	9537	-7	dBA
DieselWaterPump_Dixie_100kW_ex	DieselGen_100kW_Ex--Diesel GenSet Exhaust	5510	-14	dBA	6392	-14	dBA	4983	-9	dBA	9534	-20	dBA
WaterTruck_CAT740_01_pp	Water Truck (30,000 L)--CAT 740	MS	0	dBA	MS	0	dBA	MS	0	dBA	MS	0	dBA
WaterTruck_02_pp	Water Truck (30,000 L)--CAT 740	MS	0	dBA	MS	0	dBA	MS	0	dBA	MS	0	dBA
WheelLoader_CAT844_01_pp	Wheel Loader--CAT 844 RTD	5143	-1	dBA	7271	8	dBA	6417	9	dBA	7951	-9	dBA
WheelLoader_CAT844_02_pp	Wheel Loader--CAT 844 RTD	6137	-5	dBA	8884	6	dBA	7477	8	dBA	6603	-6	dBA
CIPTailingsThickenerUnderflowPump	CIP Tailings Thickener Underflow Pump	4510	4	dBA	4937	3	dBA	5413	-7	dBA	10162	-12	dBA
CyaniteTankAgitator	Cyanide Destruction Tank 1 Agitator	4485	-2	dBA	4938	-3	dBA	5439	-23	dBA	10140	-28	dBA
CyaniteTankAgitator	Cyanide Destruction Tank 1 Agitator	4485	-2	dBA	4928	-3	dBA	5437	-24	dBA	10151	-24	dBA
Desulphulrization_Agitator	Desulphurization AGITATOR, 185kW--Outside building	4426	-3	dBA	4881	-3	dBA	5491	-5	dBA	10147	-19	dBA
Desulphulrization_Agitator	Desulphurization AGITATOR, 185kW--Outside building	4432	-2	dBA	4883	-3	dBA	5485	-5	dBA	10151	-19	dBA
Desulphulrization_Agitator	Desulphurization AGITATOR, 185kW--Outside building	4439	-2	dBA	4886	-3	dBA	5477	-5	dBA	10154	-18	dBA
DesuphurizationlBlower	Flotation generator Blower 1--Desulphurization Flotation Blower 1	4447	-17	dBA	4860	-18	dBA	5464	-19	dBA	10186	-29	dBA
DesulphurizationFlotationPump	Flotation generator Blower 1--Desulphurization Flotation Blower 1	4429	-18	dBA	4883	-18	dBA	5487	-19	dBA	10149	-29	dBA
Detox_blower	Detox Blower, 315kW--4000 cfm inside building	4490	-21	dBA	4998	-24	dBA	5449	-34	dBA	10083	-32	dBA
DustCollectorApronFeeder_pr	Feeder generator Collector--Apron Feeder Dust Collector	5030	-4	dBA	5229	-5	dBA	4917	-4	dBA	10343	-34	dBA
DustCollectorApronFeeder_pr	Feeder generator Collector--Apron Feeder Dust Collector	4623	-18	dBA	5075	-11	dBA	5324	-5	dBA	10120	-15	dBA
DustCollectorApronFeeder_pr	Feeder generator Collector--Apron Feeder Dust Collector	4704	-18	dBA	5066	-5	dBA	5233	-5	dBA	10201	-15	dBA
DustCollectorConeCrusher_pr	Dust Collector for Cone Crusher	5058	-23	dBA	5248	-5	dBA	4891	-4	dBA	10351	-15	dBA
DustCollectorJawCrusher_pr	Dust Collector for Jaw Crusher feeder	5040	-4	dBA	5260	-23	dBA	4914	-4	dBA	10320	-15	dBA
DustCollectorLimeSilo	Lime Silo Dust Collector	4517	-6	dBA	5032	-22	dBA	5428	-22	dBA	10072	-15	dBA
DustCollectorConveyourSF	Sacrificial Conveyor to Stockpile Feed Conveyor Dust Collector	4787	-4	dBA	5097	-4	dBA	5150	-5	dBA	10246	-15	dBA
FlotationTailingsThickerPump	Flotation Tailings Thickener Overflow Pump	4452	6	dBA	4892	6	dBA	5465	4	dBA	10158	-10	dBA
FlotationTailingsThickerPump	Flotation Tailings Thickener Feed Pump, 160kW--Outside building	4459	3	dBA	4893	3	dBA	5457	1	dBA	10164	-13	dBA
FurnaceDustCollector	FurnaceBag Dust Collector	4525	-17	dBA	4990	-18	dBA	5409	-24	dBA	10121	-29	dBA
LeachBlower_280kW	Leach Blower, 280kW--6000 cfm inside building	4481	-22	dBA	4987	-29	dBA	5456	-28	dBA	10087	-32	dBA
LeachTankAgitator_1	Leach Tank Agitator, 150kW--Outside building	4519	-9	dBA	4969	-16	dBA	5411	-23	dBA	10137	-17	dBA
LeachTankAgitator_2	Leach Tank Agitator, 150kW--Outside building	4510	-1	dBA	4982	-3	dBA	5423	-20	dBA	10117	-17	dBA
LeachTankAgitator_3	Leach Tank Agitator, 150kW--Outside building	4498	-1	dBA	4962	-3	dBA	5431	-16	dBA	10128	-17	dBA
LeachTankAgitator_4	Leach Tank Agitator, 150kW--Outside building	4490	-9	dBA	4975	-12	dBA	5443	-16	dBA	10107	-17	dBA
LeachTankAgitator_5	Leach Tank Agitator, 150kW--Outside building	4478	-1	dBA	4954	-3	dBA	5451	-12	dBA	10119	-17	dBA
LeachTankAgitator_6	Leach Tank Agitator, 150kW--Outside building	4470	-1	dBA	4967	-3	dBA	5463	-10	dBA	10098	-17	dBA
PreLeachThickenerPump	Horizontal centrifugal slurry--Pre-leach Thickener Underflow Pump	4515	7	dBA	5013	5	dBA	5425	-5	dBA	10090	-9	dBA
ProductionConveyor	Stockpile Conveyor--w=1.35m; l=183m; 28.1m rise	MS	11	dBA	MS	10	dBA	MS	10	dBA	MS	-1	dBA
ProductionConveyor	Stockpile Conveyor--w=1.35m; l=183m; 28.1m rise	MS	-2	dBA	MS	5	dBA	MS	5	dBA	MS	-5	dBA
ProductionConveyor	Stockpile Conveyor--w=1.35m; l=183m; 28.1m rise	MS	-2	dBA	MS	5	dBA	MS	5	dBA	MS	-6	dBA
ProcessWaterPump_250kW	Process Water Pump, 250kW--Inside building	4524	3	dBA	4998	-10	dBA	5412	-14	dBA	10112	-26	dBA

Notes on Table:
1. dBA = 1-hour energy equivalent sound (Leq (1-hr))
2. Height above local grade 3. MS = Mobile Source

Table A-2b: Peak Production Phase - Point of Reception Noise Impact

Evening/Nighttime - LAeq,1hr

Project: Great Bear Project
Location: Red Lake, ON

Source ID	Source Description	Residence/Cabin/Lodge/Camp POR1 POR1 POR1 Point of Reception ID POR1			Residence/Cabin/Lodge/Camp POR4 POR4 POR4 Point of Reception ID POR4			Residence/Cabin/Lodge/Camp POR5 POR5 POR5 Point of Reception ID POR5			Residence/Cabin/Lodge/Camp POR6 POR6 POR6 Point of Reception ID POR6		
		Point of Reception Description			Point of Reception Description			Point of Reception Description			Point of Reception Description		
		Residence/Cabin/Lodge/Camp			Residence/Cabin/Lodge/Camp			Residence/Cabin/Lodge/Camp			Residence/Cabin/Lodge/Camp		
		Point of reception coordinates			Point of reception coordinates			Point of reception coordinates			Point of reception coordinates		
		X	Y	Z [2]	X	Y	Z [2]	X	Y	Z [2]	X	Y	Z [2]
		456965	5639223	372	451915	5639044	357	451671	5630891	354	465139	5634939	350
		Point of Reception 1			Point of Reception 4			Point of Reception 5			Point of Reception 6		
		Distance [3] (m)	Sound Level at PoR	Units [1] (dBA)	Distance [3] (m)	Sound Level at PoR	Units [1] (dBA)	Distance [3] (m)	Sound Level at PoR	Units [1] (dBA)	Distance [3] (m)	Sound Level at PoR	Units [1] (dBA)
Tailings_to_PastePump	Tailings to Paste Plant Pump 1	4467	3	dBA	4891	3	dBA	5449	1	dBA	10172	-12	dBA
Tailings_to_PastePump	Tailings to Paste Plant Pump 1	4475	4	dBA	4894	3	dBA	5440	1	dBA	10176	-12	dBA
TailingsPump	Tailings Pump	4509	5	dBA	4922	3	dBA	5410	-18	dBA	10177	-31	dBA
ProcessPlant_F1	Proces Plant Input Facade 1--	MS	-12	dBA	MS	-13	dBA	MS	-12	dBA	MS	-6	dBA
ProcessPlant_F2	Proces Plant Input Facade 2--	MS	6	dBA	MS	3	dBA	MS	-9	dBA	MS	-4	dBA
ProcessPlant_F3	Proces Plant Input Facade 3--	MS	4	dBA	MS	3	dBA	MS	2	dBA	MS	-20	dBA
ProcessPlant_F4	Proces Plant Input Facade 4--	MS	-8	dBA	MS	-9	dBA	MS	6	dBA	MS	-16	dBA
ProcessPlant_top	Proces Plant Input Top--	4555	8	dBA	4986	8	dBA	5376	8	dBA	10152	0	dBA
BackHoe_PC1250_q	Quarry Source - Production Backhoe--PC1250 (6.7m3)	5287	0	dBA	2232	0	dBA	5976	0	dBA	13031	0	dBA
BackHoe_330_bp	Backhoe--330	4733	0	dBA	911	0	dBA	7378	0	dBA	13221	0	dBA
BlastLoaderCAT262_01_q	Blasting Loader--CAT 262	6112	-17	dBA	8850	-4	dBA	7453	-2	dBA	6629	-17	dBA
BlastTruck_F350_q	Blasters Truck--F350	MS	0	dBA	MS	0	dBA	MS	0	dBA	MS	0	dBA
Dozer_CAT_D6_bp	Dozer - D6--CAT D6	4469	0	dBA	1675	0	dBA	6822	0	dBA	12633	0	dBA
Dozer_CAT_D8_q	Dozer--CAT D8	6101	0	dBA	3042	0	dBA	5117	0	dBA	13401	0	dBA
DewateringPump_01_q	Dewatering Pump--DeWPump	6048	0	dBA	2916	0	dBA	5243	0	dBA	13426	0	dBA
DewateringPump_02_q	Dewatering Pump--DeWPump	6242	0	dBA	3203	0	dBA	4958	0	dBA	13456	0	dBA
DewateringPump_01_bp	Dewatering Pump--DeWPump	4501	0	dBA	1706	0	dBA	6773	0	dBA	12639	0	dBA
DewateringPump_02_bp	Dewatering Pump--DeWPump	6016	0	dBA	3555	0	dBA	4648	0	dBA	12915	0	dBA
Loader_L1350_q	Quarry Source - Production Loader--L-1350 (23m3)	5317	0	dBA	2524	0	dBA	5713	0	dBA	12879	0	dBA
Loader_CAT966_bp	Borrow Source - Loader (FEL)--CAT 966	MS	0	dBA	MS	0	dBA	MS	0	dBA	MS	0	dBA
PrimaryDrill_D65_01_q	Primary Drill--140mm SmartRoc D65	6025	0	dBA	2986	0	dBA	5172	0	dBA	13349	0	dBA
PrimaryDrill_D65_02_q	Primary Drill--140mm SmartRoc D65	6192	0	dBA	3125	0	dBA	5035	0	dBA	13451	0	dBA
PickUp_F150_q	Pick-up--F150	MS	0	dBA	MS	0	dBA	MS	0	dBA	MS	0	dBA
QuarryDieselGenset_200kW_OP&UG	DieselGen_200kW_Case--Diesel GenSet Casing	5463	2	dBA	2398	12	dBA	5787	0	dBA	13110	-10	dBA
RockCrusher_UD211_01_q	Rock Crusher--Sandvik UD211	6220	0	dBA	3069	0	dBA	5097	0	dBA	13526	0	dBA
ScreeningPlant_bp	Borrow Source - Screening Plant--	4642	0	dBA	1665	0	dBA	6724	0	dBA	12770	0	dBA
ScreeningPlant_bp	Borrow Source - Screening Plant--	6216	0	dBA	3061	0	dBA	5105	0	dBA	13527	0	dBA
ArticulatedTruckCAT740_01_tf	EJ Articulated Trucks--CAT 740	MS	0	dBA	MS	0	dBA	MS	0	dBA	MS	0	dBA
Compactor_CAT64B_02_tf	Compactor--CAT CS64B	5754	0	dBA	3039	0	dBA	5154	0	dBA	12997	0	dBA
Compactor_CAT64B_03_tf	Compactor--CAT CS64B	4760	0	dBA	4228	0	dBA	5142	0	dBA	11052	0	dBA
Compactor_CAT64B_01_tf	Compactor--CAT CS64B	4882	0	dBA	1877	0	dBA	6423	0	dBA	12855	0	dBA
Dozer_CAT_D6_01_tf	Dozer - D6--CAT D6	3409	0	dBA	3041	0	dBA	6761	0	dBA	11082	0	dBA
Dozer_CAT_D6_02_tf	Dozer - D6--CAT D6	3555	0	dBA	4013	0	dBA	6328	0	dBA	10353	0	dBA
Excavator_CAT_D6_01_tf	EX Dozer--CAT D6	5931	0	dBA	3609	0	dBA	4629	0	dBA	12773	0	dBA
Excavator_CAT_D6_02_tf	EX Dozer--CAT D6	3670	0	dBA	2359	0	dBA	6939	0	dBA	11714	0	dBA
Dozer_CAT_D8_tf	Dozer--CAT D8	4793	0	dBA	3741	0	dBA	5247	0	dBA	11496	0	dBA
DewateringPump_01_tf	Dewatering Pump--DeWPump	5104	0	dBA	4293	0	dBA	4817	0	dBA	11318	0	dBA
DewateringPump_03_tf	Dewatering Pump--DeWPump	5457	0	dBA	3906	0	dBA	4680	0	dBA	12009	0	dBA
DewateringPump_02_tf	Dewatering Pump--DeWPump	5702	0	dBA	2810	0	dBA	5368	0	dBA	13099	0	dBA
Exca_CAT336_01_tf	Excavator--CAT 336	4158	0	dBA	3763	0	dBA	5793	0	dBA	10961	0	dBA
Exca_CAT336_02_tf	Excavator--CAT 336	5721	0	dBA	2963	0	dBA	5227	0	dBA	13015	0	dBA
Exca_CAT336_03_tf	Excavator--CAT 336	4624	0	dBA	1846	0	dBA	6579	0	dBA	12655	0	dBA
FlatBedBoomTruck_tf	Flat Bed or Boom Truck --	MS	0	dBA	MS	0	dBA	MS	0	dBA	MS	0	dBA
LightDutyPickUp_tf	Pick-up--F150	MS	0	dBA	MS	0	dBA	MS	0	dBA	MS	0	dBA
Skidder_JD640_01_tf	Skidder--JD 640L	4923	0	dBA	3817	0	dBA	5114	0	dBA	11552	0	dBA
Skidder_JD640_02_tf	Skidder--JD 640L	4313	0	dBA	3786	0	dBA	5646	0	dBA	11059	0	dBA
TandemWaterTruck_2500_pr	Tadem Water Trucks-- 2500 gls	MS	0	dBA	MS	0	dBA	MS	0	dBA	MS	0	dBA
TMF_DamDiesel_DieselGen_case	DieselGen_100kW_Case--Diesel GenSet Casing	4562	0	dBA	3666	0	dBA	5467	0	dBA	11357	0	dBA
CFR_Plant	CFR Plant Area	4879	18	dBA	5990	16	dBA	5475	17	dBA	9350	10	dBA
CRF_conveyor	Stockpile Conveyor--w=1.35m; l=183m; 28.1m rise	MS	0	dBA	MS	-3	dBA	MS	-1	dBA	MS	-10	dBA
PastePlantDustCollector	Paste Plant Dust Collector	5274	-20	dBA	6663	-9	dBA	5545	-6	dBA	8925	-23	dBA

Notes on Table:
1. dBA = 1-hour energy equivalent sound (Leq (1-hr))
2. Height above local grade 3. MS = Mobile Source

Table A-2b: Peak Production Phase - Point of Reception Noise Impact

Evening/Nighttime - LAeq,1hr

Project: Great Bear Project
Location: Red Lake, ON

			Residence/Cabin/Lodge/Camp			Residence/Cabin/Lodge/Camp			Residence/Cabin/Lodge/Camp			Residence/Cabin/Lodge/Camp		
			POR1	POR1	POR1	POR4	POR4	POR4	POR5	POR5	POR5	POR6	POR6	POR6
			Point of Reception ID			**Point of Reception ID**			**Point of Reception ID**			**Point of Reception ID**		
			POR1			**POR4**			**POR5**			**POR6**		
			Point of Reception Description			**Point of Reception Description**			**Point of Reception Description**			**Point of Reception Description**		
			Residence/Cabin/Lodge/Camp			**Residence/Cabin/Lodge/Camp**			**Residence/Cabin/Lodge/Camp**			**Residence/Cabin/Lodge/Camp**		
			Point of reception coordinates			**Point of reception coordinates**			**Point of reception coordinates**			**Point of reception coordinates**		
			X	**Y**	**Z [2]**	**X**	**Y**	**Z [2]**	**X**	**Y**	**Z [2]**	**X**	**Y**	**Z [2]**
			456965	5639223	372	451915	5639044	357	451671	5630891	354	465139	5634939	350
Source ID	**Source Description**	**Point of Reception 1**			**Point of Reception 4**			**Point of Reception 5**			**Point of Reception 6**		
		Distance [3] (m)	**Sound Level at PoR**	**Units [1] (dBA)**	**Distance [3] (m)**	**Sound Level at PoR**	**Units [1] (dBA)**	**Distance [3] (m)**	**Sound Level at PoR**	**Units [1] (dBA)**	**Distance [3] (m)**	**Sound Level at PoR**	**Units [1] (dBA)**
PastePlantFacade_Top	Paste Plant top--	5260	9	dBA	6686	6	dBA	5586	9	dBA	8879	3	dBA
PastePlant_F1	Paste Plant facade 1--	MS	6	dBA	MS	4	dBA	MS	6	dBA	MS	-10	dBA
PastePlant_F2	Paste Plant facade 2--	MS	-7	dBA	MS	-8	dBA	MS	7	dBA	MS	-9	dBA
PastePlant_F3	Paste Plant facade 3--	MS	-8	dBA	MS	-9	dBA	MS	-4	dBA	MS	0	dBA
PastePlant_F4	Paste Plant facade 4--	MS	8	dBA	MS	5	dBA	MS	-3	dBA	MS	2	dBA
SnapAirBlower_PastePlant	Paste Plant (Backfill) Outdoors--Snap Air Blower 1	5279	-47	dBA	6680	-45	dBA	5553	-33	dBA	8910	-50	dBA
TailingsStorageTankAgitator	Paste Plant (Backfill) Outdoors--Tailings Storage Tank Agitator	5302	-23	dBA	6730	-22	dBA	5575	-5	dBA	8869	-15	dBA
ThickenerRecirculatingPump	Paste Plant (Backfill) Outdoors--Thickener Recirculation Pump	5295	-24	dBA	6713	-23	dBA	5567	-7	dBA	8883	-29	dBA
ThickerUFPumpPastePlant	Paste Plant (Backfill) Outdoors--Thickener UF Pump	5287	-24	dBA	6696	-23	dBA	5560	-7	dBA	8897	-30	dBA
SubstationArea	Substation Area cumulative	2576	6	dBA	5669	-5	dBA	7882	-9	dBA	8265	-10	dBA
VentilationFan_LP_RAR2	VF_LP_RAR2--LP Return Air Raise	5743	7	dBA	8128	1	dBA	6790	4	dBA	7356	3	dBA
VentilationFan_LP_RAR2	VF_LP_RAR2--LP Return Air Raise	5742	7	dBA	8128	1	dBA	6790	4	dBA	7355	3	dBA
VentilationFan_VIG_FAR	VF_VIG_FAR--Viggo Fresh Air Raise	6055	2	dBA	8579	-5	dBA	7062	-1	dBA	7026	-1	dBA
VentilationFan_VIG_FAR	VF_VIG_FAR--Viggo Fresh Air Raise	6055	2	dBA	8579	-5	dBA	7062	-1	dBA	7026	-1	dBA
VentilationFan_VIG_RAR	VF_VIG_RAR--Viggo Return Air Raise	5915	-4	dBA	8474	-10	dBA	7096	-6	dBA	7011	-6	dBA
VentilationFan_VIG_RAR	VF_VIG_RAR--Viggo Return Air Raise	5915	-4	dBA	8474	-10	dBA	7096	-6	dBA	7011	-6	dBA
UOR12 NorthDam to Overburden#4	Articulating Truck--40t	MS	0	dBA	MS	0	dBA	MS	0	dBA	MS	0	dBA
UOR13 SouthDam to Overburden#3	Articulating Truck--40t	MS	0	dBA	MS	0	dBA	MS	0	dBA	MS	0	dBA
UOR14 SouthDam-spilleway to SouthD	Articulating Truck--40t	MS	0	dBA	MS	0	dBA	MS	0	dBA	MS	0	dBA
UOR15 WestDam to Overburden#5	Articulating Truck--40t	MS	0	dBA	MS	0	dBA	MS	0	dBA	MS	0	dBA
UOR27 TMF Facility to NorthDam	Articulating Truck--40t	MS	0	dBA	MS	0	dBA	MS	0	dBA	MS	0	dBA
UOR28 TMF Facility to SouthDam	Articulating Truck--40t	MS	0	dBA	MS	0	dBA	MS	0	dBA	MS	0	dBA
UOR29 TMF Facilty to WestDam	Articulating Truck--40t	MS	0	dBA	MS	0	dBA	MS	0	dBA	MS	0	dBA
UOR30_40t_PAG_to_OVB1	Articulating Truck--40t	MS	0	dBA	MS	0	dBA	MS	0	dBA	MS	0	dBA
UOR16 TMF Facility to NorthDam	Haul Truck--CAT 777F	MS	0	dBA	MS	0	dBA	MS	0	dBA	MS	0	dBA
UOR17 BorrowSource#3 to NorthDam	Haul Truck--CAT 777F	MS	0	dBA	MS	0	dBA	MS	0	dBA	MS	0	dBA
UOR18 NPAGStockpile to NorthDam	Haul Truck--CAT 777F	MS	0	dBA	MS	0	dBA	MS	0	dBA	MS	0	dBA
UOR19 TMF Facility to SouthDam	Haul Truck--CAT 777F	MS	0	dBA	MS	0	dBA	MS	0	dBA	MS	0	dBA
UOR20 BorrowSource#3 to SouthDam	Haul Truck--CAT 777F	MS	0	dBA	MS	0	dBA	MS	0	dBA	MS	0	dBA
UOR22 TMF Facility to WestDam	Haul Truck--CAT 777F	MS	0	dBA	MS	0	dBA	MS	0	dBA	MS	0	dBA
UOR23 BorrowSource#3 to WestDam	Haul Truck--CAT 777F	MS	0	dBA	MS	0	dBA	MS	0	dBA	MS	0	dBA
UOR24 NPAG Stockpile to WestDam	Haul Truck--CAT 777F	MS	0	dBA	MS	0	dBA	MS	0	dBA	MS	0	dBA
UOR25 NPAG Stockpile to LP Central	Haul Truck--CAT 777F	MS	0	dBA	MS	0	dBA	MS	0	dBA	MS	0	dBA
UOR26 NPAG Stockpile to Road Base	Haul Truck--CAT 777F	MS	0	dBA	MS	0	dBA	MS	0	dBA	MS	0	dBA
UOR1 LP Central to Overburden#1	Haul Truck--CAT 785	MS	24	dBA	MS	20	dBA	MS	20	dBA	MS	17	dBA
UOR10 AEXPortal to PAG Stockpile	Haul Truck--CAT 785	MS	19	dBA	MS	14	dBA	MS	14	dBA	MS	8	dBA
UOR11 AEXPortal to NPAG Stockpile	Haul Truck--CAT 785	MS	15	dBA	MS	10	dBA	MS	10	dBA	MS	4	dBA
UOR3 LP Central to NPAG Stockpile	Haul Truck--CAT 785	MS	27	dBA	MS	22	dBA	MS	21	dBA	MS	18	dBA
UOR4 LP Central to Crusher	Haul Truck--CAT 785	MS	25	dBA	MS	22	dBA	MS	23	dBA	MS	17	dBA
UOR5 LP Central to LGO Stockpile sma	Haul Truck--CAT 785	MS	18	dBA	MS	15	dBA	MS	15	dBA	MS	10	dBA
UOR6 LP Central to LGO Stockpile big	Haul Truck--CAT 785	MS	20	dBA	MS	16	dBA	MS	16	dBA	MS	13	dBA
UOR7 LGO Stockpile West to Crusher	Haul Truck--CAT 785	MS	10	dBA	MS	7	dBA	MS	8	dBA	MS	0	dBA
UOR8 LGO Stockpile East to Crusher	Haul Truck--CAT 785	MS	8	dBA	MS	6	dBA	MS	7	dBA	MS	-1	dBA
UOR9 AEXPortal to Crusher	Haul Truck--CAT 785	MS	19	dBA	MS	19	dBA	MS	20	dBA	MS	10	dBA
HVAC_Emul_in	HVAC_inlet--	5567	-10	dBA	8962	-18	dBA	8523	-17	dBA	5682	-10	dBA
HVAC_Emul_in	HVAC_inlet--	5570	-10	dBA	8965	-18	dBA	8523	-17	dBA	5681	-10	dBA
HVAC_Emul_in	HVAC_inlet--	5572	-10	dBA	8968	-18	dBA	8524	-17	dBA	5680	-10	dBA
HVAC_Emul_in	HVAC_inlet--	5575	-10	dBA	8970	-18	dBA	8524	-17	dBA	5678	-10	dBA
HVAC_Emul_out	HVAC_outlet--	5567	-12	dBA	8962	-21	dBA	8523	-20	dBA	5682	-12	dBA
HVAC_Emul_out	HVAC_outlet--	5570	-12	dBA	8965	-21	dBA	8523	-20	dBA	5681	-12	dBA
HVAC_Emul_out	HVAC_outlet--	5572	-12	dBA	8968	-21	dBA	8524	-20	dBA	5680	-12	dBA

Notes on Table:
1. dBA = 1-hour energy equivalent sound (Leq (1-hr))
2. Height above local grade 3. MS = Mobile Source

Table A-2b: Peak Production Phase - Point of Reception Noise Impact

Evening/Nighttime - LAeq,1hr

Project: Great Bear Project
Location: Red Lake, ON

Source ID	Source Description	Residence/Cabin/Lodge/Camp POR1 POR1 POR1 Point of Reception ID: POR1 Point of Reception Description: Residence/Cabin/Lodge/Camp Point of reception coordinates: X 456965, Y 5639223, Z [2] 372			Residence/Cabin/Lodge/Camp POR4 POR4 POR4 Point of Reception ID: POR4 Point of Reception Description: Residence/Cabin/Lodge/Camp Point of reception coordinates: X 451915, Y 5639044, Z [2] 357			Residence/Cabin/Lodge/Camp POR5 POR5 POR5 Point of Reception ID: POR5 Point of Reception Description: Residence/Cabin/Lodge/Camp Point of reception coordinates: X 451671, Y 5630891, Z [2] 354			Residence/Cabin/Lodge/Camp POR6 POR6 POR6 Point of Reception ID: POR6 Point of Reception Description: Residence/Cabin/Lodge/Camp Point of reception coordinates: X 465139, Y 5634939, Z [2] 350		
		Point of Reception 1			Point of Reception 4			Point of Reception 5			Point of Reception 6		
		Distance [3] (m)	Sound Level at PoR	Units [1] (dBA)	Distance [3] (m)	Sound Level at PoR	Units [1] (dBA)	Distance [3] (m)	Sound Level at PoR	Units [1] (dBA)	Distance [3] (m)	Sound Level at PoR	Units [1] (dBA)
HVAC_Emul_out	HVAC_outlet--	5575	-12	dBA	8970	-21	dBA	8524	-20	dBA	5678	-12	dBA
HVAC_Mag_S_in	HVAC_inlet--	4799	-8	dBA	7933	-16	dBA	7858	-15	dBA	6596	-13	dBA
HVAC_Mag_S_in	HVAC_inlet--	4802	-8	dBA	7936	-16	dBA	7859	-15	dBA	6594	-20	dBA
HVAC_Mag_S_in	HVAC_inlet--	4804	-8	dBA	7938	-16	dBA	7859	-15	dBA	6592	-12	dBA
HVAC_Mag_S_in	HVAC_inlet--	4807	-8	dBA	7941	-16	dBA	7860	-15	dBA	6591	-12	dBA
HVAC_Mag_S_out	HVAC_outlet--	4799	-11	dBA	7933	-18	dBA	7858	-18	dBA	6596	-15	dBA
HVAC_Mag_S_out	HVAC_outlet--	4802	-11	dBA	7936	-18	dBA	7858	-18	dBA	6594	-24	dBA
HVAC_Mag_S_out	HVAC_outlet--	4804	-10	dBA	7938	-18	dBA	7859	-18	dBA	6593	-15	dBA
HVAC_Mag_S_out	HVAC_outlet--	4807	-10	dBA	7941	-18	dBA	7859	-18	dBA	6591	-15	dBA
Transformer_600kVA	600 kVA--Transformer	5577	-34	dBA	8976	-48	dBA	8532	-40	dBA	5671	-34	dBA
HVAC_Admin_in	HVAC_inlet--	5009	-8	dBA	5503	-10	dBA	5039	-8	dBA	10030	-20	dBA
HVAC_Admin_out	HVAC_outlet--	5009	-10	dBA	5506	-12	dBA	5040	-10	dBA	10027	-23	dBA
HVAC_CAMP_A_in	HVAC_inlet--	5065	-8	dBA	5502	-10	dBA	4973	-8	dBA	10087	-20	dBA
HVAC_CAMP_A_out	HVAC_outlet--	5068	-10	dBA	5503	-12	dBA	4971	-10	dBA	10089	-23	dBA
HVAC_CAMP_B_in	HVAC_inlet--	5067	-8	dBA	5519	-10	dBA	4978	-8	dBA	10071	-20	dBA
HVAC_CAMP_B_out	HVAC_outlet--	5069	-10	dBA	5520	-12	dBA	4976	-10	dBA	10071	-23	dBA
HVAC_CAMP_C_in	HVAC_inlet--	5067	-8	dBA	5533	-10	dBA	4984	-8	dBA	10055	-20	dBA
HVAC_CAMP_C_out	HVAC_outlet--	5070	-10	dBA	5535	-12	dBA	4982	-10	dBA	10056	-23	dBA
HVAC_Kitchen_in	HVAC_inlet--	5046	-8	dBA	5541	-10	dBA	5013	-8	dBA	10026	-20	dBA
HVAC_Kitchen_out	HVAC_outlet--	5046	-10	dBA	5544	-12	dBA	5014	-10	dBA	10023	-23	dBA
HVAC_Storage_in	HVAC_inlet--	4924	-8	dBA	5499	-10	dBA	5136	-8	dBA	9951	-20	dBA
HVAC_Storage_out	HVAC_outlet--	4924	-10	dBA	5502	-12	dBA	5138	-11	dBA	9948	-23	dBA
HVAC_TreatPlant_in	HVAC_inlet--	4996	-8	dBA	5620	-10	dBA	5108	-8	dBA	9890	-20	dBA
HVAC_TREATPlant_out	HVAC_outlet--	4997	-10	dBA	5623	-12	dBA	5109	-10	dBA	9886	-23	dBA
HVAC_Truck_S_in	HVAC_inlet--	4930	-8	dBA	5568	-10	dBA	5161	-8	dBA	9881	-19	dBA
VentilationFan_AEX	VentFan_aex--UG AEX Portal Ventilation Fan	4937	18	dBA	5785	22	dBA	5270	24	dBA	9644	12	dBA

Notes on Table:
1. dBA = 1-hour energy equivalent sound (Leq (1-hr))
2. Height above local grade 3. MS = Mobile Source

Table A-2c: Emergency Test for Peak Production Phase - Noise Source Summary

Project: Great Bear Project
Location: Red Lake, ON

Source ID [1]	Source Description	Source Location NAD 83 / UTM zone 15N		Sound Power Level [3]	Sound Power Level Adjustment [3]	Source Location [4]	Sound Characteristics [5]	Noise Control Measures [6]
		Latitude [2]	Longitude [2]					
		(m)	(m)	(dBA)	(+dB)	(I or O)	(S,Q,I,B,T,C)	(S,A,B,L,E,O,U)
DieselGen_500kW	DieselGen_500kW_Case--	455106	5635305	97	0	O	S	E
DieselGen_500kW_ex	DieselGen_500kW_Ex--	455107	5635306	97	0	O	S	S
DieselGenSet_800kW_case	DieselGen_800kW_Case--CAT3516B at 800kW -- Emergency	457243	5637228	125	0	O	S	E
DieselGenSet_800kW_ex	DieselGen_800kW_ex--	457243	5637228	99	0	O	S	S
DieselGenSet_2500kW_ex	Diesel Generator Exhaust 2250kW-- CAT3516B -- Emergency	457072	5636595	101	0	O	S	S
DieselGenSet_2500kW_ex	Diesel Generator Exhaust 2250kW-- CAT3516B -- Emergency	457071	5636597	101	0	O	S	S
DieselGenSet_2500kW_ex	Diesel Generator Exhaust 2250kW-- CAT3516B -- Emergency	456192	5634244	101	0	O	S	S
DieselGenSet_2500kW_ex	Diesel Generator Exhaust 2250kW-- CAT3516B -- Emergency	455110	5634458	101	0	O	S	S
DieselGenSet_2500kW_case	Diesel Generator Mechanical Case 2250kW-- CAT3516B -- Emergency	457062	5636588	117	0	O	S	U
DieselGenSet_2500kW_case	Diesel Generator Mechanical Case 2250kW-- CAT3516B -- Emergency	457060	5636590	117	0	O	S	U
DieselGenSet_2500kW_case	Diesel Generator Mechanical Case 2250kW-- CAT3516B -- Emergency	456200	5634244	117	0	O	S	U
DieselGenSet_2500kW_case	Diesel Generator Mechanical Case 2250kW-- CAT3516B -- Emergency	455112	5634462	117	0	O	S	U
Emergency_SumPump	Emergency Sources--Emergency Sump Pump - Paste (Backfill) Plant - Indoors	456254	5634001	105	0	O	S	U
PowerGen5MW_case	5 MW Natural Gas-Fired Reciprocating Engine Casing	457036	5636622	127	0	O	S	U
PowerGen5MW_ex	5 MW Natural Gas-Fired Reciprocating Engine outlet-- Exhaust	457038	5636620	112	0	O	S	S
Ambulance	Bus (60 seats)--BusPersonnel	454712	5634361	92	0	O	S	U
FireTruck	Pick-up--F150	454680	5634319	98	0	O	S	U

Notes on Table:

1. Wherever possible, the Source ID matches the identifiers used in the ESDM report.
2. Source centre of gravity coordinates used for Line and Area sources. Vertical area source coordinates not provided since corresponding area source coordinates are provided.
3. Sound Power Level of Source, in dBA, including sound characteristic adjustments per NPC-104.
4. Source Location: O = Outside of building, including the roof, I = Inside of building
5. Sound Characteristic, per NPC-104
   S = Steady
   Q = Quasi-Steady Impulsive
   I = Impulsive
   B = Buzzing
   T = Tonal
   C = Cyclic
6. Noise Control Measures Included
   S = Silencer/Muffler
   A = Acoustic lining, plenum
   B = Barrier
   L = Lagging
   E = acoustic enclosure
   O = Other
   U = uncontrolled

Table A-2d: Emergency Test for Peak Production Phase - Noise Source Summary

Daytime - LAeq,1hr

Project: Great Bear Project
Location: Red Lake, ON

		Residence/Cabin/Lodge/Camp POR1 POR1 POR1			Residence/Cabin/Lodge/Camp POR4 POR4 POR4			Residence/Cabin/Lodge/Camp POR5 POR5 POR5			Residence/Cabin/Lodge/Camp POR6 POR6 POR6		
		Point of Reception ID			**Point of Reception ID**			**Point of Reception ID**			**Point of Reception ID**		
		POR1			**POR4**			**POR5**			**POR6**		
		Point of Reception Description			**Point of Reception Description**			**Point of Reception Description**			**Point of Reception Description**		
		Residence/Cabin/Lodge/Camp			**Residence/Cabin/Lodge/Camp**			**Residence/Cabin/Lodge/Camp**			**Residence/Cabin/Lodge/Camp**		
		Point of reception coordinates			**Point of reception coordinates**			**Point of reception coordinates**			**Point of reception coordinates**		
		X	**Y**	**Z [2]**	**X**	**Y**	**Z [2]**	**X**	**Y**	**Z [2]**	**X**	**Y**	**Z [2]**
		456965	5639223	372	451915	5639044	357	451671	5630891	354	465139	5634939	350
Source ID	**Source Description**	**Point of Reception 1**			**Point of Reception 4**			**Point of Reception 5**			**Point of Reception 6**		
		Distance [3] (m)	**Sound Level at PoR**	**Units [1] (dBA)**	**Distance [3] (m)**	**Sound Level at PoR**	**Units [1] (dBA)**	**Distance [3] (m)**	**Sound Level at PoR**	**Units [1] (dBA)**	**Distance [3] (m)**	**Sound Level at PoR**	**Units [1] (dBA)**
Ambulance	Bus (60 seats)--BusPersonnel	MS	1	dBA	MS	-14	dBA	MS	-17	dBA	MS	-24	dBA
DieselGenSet_800kW_case	DieselGen_800kW_Case--CAT3516B at 800kW -- Emergency	2014	35	dBA	5629	23	dBA	8439	16	dBA	8221	17	dBA
DieselGen_500kW	DieselGen_500kW_Case--	4337	-3	dBA	4916	-16	dBA	5594	-6	dBA	10040	-17	dBA
DieselGen_500kW_ex	DieselGen_500kW_Ex--	4335	-7	dBA	4915	-22	dBA	5595	-10	dBA	10039	-25	dBA
DieselGenSet_2500kW_case	Diesel Generator Mechanical Case 2250kW-- CAT3516B -- Emergency	2636	12	dBA	5703	-2	dBA	7844	-9	dBA	8244	-10	dBA
DieselGenSet_2500kW_case	Diesel Generator Mechanical Case 2250kW-- CAT3516B -- Emergency	2635	12	dBA	5701	-2	dBA	7844	-9	dBA	8246	-10	dBA
DieselGenSet_2500kW_case	Diesel Generator Mechanical Case 2250kW-- CAT3516B -- Emergency	5037	0	dBA	6434	-5	dBA	5636	-2	dBA	8966	-12	dBA
DieselGenSet_2500kW_case	Diesel Generator Mechanical Case 2250kW-- CAT3516B -- Emergency	5109	0	dBA	5587	-2	dBA	4960	0	dBA	10038	-13	dBA
DieselGenSet_2500kW_ex	Diesel Generator Exhaust 2250kW-- CAT3516B -- Emergency	2630	-3	dBA	5709	-17	dBA	7856	-23	dBA	8235	-25	dBA
DieselGenSet_2500kW_ex	Diesel Generator Exhaust 2250kW-- CAT3516B -- Emergency	2628	-3	dBA	5707	-17	dBA	7856	-23	dBA	8237	-25	dBA
DieselGenSet_2500kW_ex	Diesel Generator Exhaust 2250kW-- CAT3516B -- Emergency	5038	-15	dBA	6429	-20	dBA	5630	-17	dBA	8974	-27	dBA
DieselGenSet_2500kW_ex	Diesel Generator Exhaust 2250kW-- CAT3516B -- Emergency	5113	-15	dBA	5589	-17	dBA	4956	-14	dBA	10041	-28	dBA
DieselGenSet_800kW_ex	DieselGen_800kW_ex--	2014	5	dBA	5629	-8	dBA	8439	-15	dBA	8221	-14	dBA
Emergency_SumPump	Emergency Sources--Emergency Sump Pump - Paste (Backfill) Plant - Indoors	5270	-8	dBA	6653	-9	dBA	5539	-5	dBA	8934	-26	dBA
FireTruck	Pick-up--F150	MS	7	dBA	MS	-8	dBA	MS	-12	dBA	MS	-19	dBA
PowerGen5MW_case	5 MW Natural Gas-Fired Reciprocating Engine Casing	2602	28	dBA	5665	17	dBA	7851	12	dBA	8276	11	dBA
PowerGen5MW_ex	5 MW Natural Gas-Fired Reciprocating Engine outlet-- Exhaust	2604	18	dBA	5668	6	dBA	7851	1	dBA	8274	0	dBA

Notes on Table:
1. dBA = 1-hour energy equivalent sound (Leq (1-hr))
2. Height above local grade 3. MS = Mobile Source

Table A-3: Underground Production Phase - Noise Source Summary

Project: Great Bear Project
Location: Red Lake, ON

Source ID [1]	Source Description	Source Location NAD 83 / UTM zone 15N		Sound Power Level [3]	Sound Power Level Adjustment [3]	Source Location [4]	Sound Characteristics [5]	Noise Control Measures [6]
		Latitude [2]	Longitude [2]					
		(m)	(m)	(dBA)	(+dB)	(I or O)	(S,Q,I,B,T,C)	(S,A,B,L,E,O,U)
DustCollectorApronFeeder_pr	Feeder generator Collector--Apron Feeder Dust Collector	454800	5634683	103	0	O	S	U
DustCollectorApronFeeder_pr	Feeder generator Collector--Apron Feeder Dust Collector	455020	5635029	103	0	O	S	U
DustCollectorApronFeeder_pr	Feeder generator Collector--Apron Feeder Dust Collector	454938	5634979	103	0	O	S	U
ScreeningPlant_bp	Borrow Source - Screening Plant--	452638	5637545	116	0	O	S	U
CIPTailingsThickenerUnderflowPump	CIP Tailings Thickener Underflow Pump	454980	5635173	107	0	O	S	U
DustCollectorConeCrusher_pr	Dust Collector for Cone Crusher	454792	5634655	103	0	O	S	U
Desulphulrization_Agitator	Desulphurization AGITATOR, 185kW--Outside building	454997	5635259	102	0	O	S	U
Desulphulrization_Agitator	Desulphurization AGITATOR, 185kW--Outside building	454993	5635254	102	0	O	S	U
Desulphulrization_Agitator	Desulphurization AGITATOR, 185kW--Outside building	454990	5635248	102	0	O	S	U
DesuphurizationlBlower	Flotation generator Blower 1--Desulphurization Flotation Blower 1	454958	5635255	81	0	O	S	U
DesulphurizationFlotationPump	Flotation generator Blower 1--Desulphurization Flotation Blower 1	454996	5635256	81	0	O	S	U
Detox_blower	Detox Blower, 315kW--4000 cfm inside building	455058	5635158	83	0	O	S	U
DewateringPump_10_pp	Dewatering Pump--DeWPump	458856	5633472	104	0	O	S	U
DewateringPump_09_pp	Dewatering Pump--DeWPump	458120	5633398	104	0	O	S	U
DewateringPump_08_pp	Dewatering Pump--DeWPump	457073	5634548	104	0	O	S	U
DewateringPump_07_pp	Dewatering Pump--DeWPump	457122	5633847	104	0	O	S	U
DewateringPump_06_pp	Dewatering Pump--DeWPump	458725	5633524	104	0	O	S	U
DewateringPump_05_pp	Dewatering Pump--DeWPump	457452	5633554	104	0	O	S	U
DewateringPump_04_pp	Dewatering Pump--DeWPump	458453	5634387	104	0	O	S	U
DewateringPump_03_tf	Dewatering Pump--DeWPump	453137	5635335	104	0	O	S	U
DewateringPump_03_pp	Dewatering Pump--DeWPump	456362	5634569	104	0	O	S	U
DewateringPump_02_tf	Dewatering Pump--DeWPump	452105	5636241	104	0	O	S	U
DewateringPump_02_q	Dewatering Pump--DeWPump	451714	5635848	104	0	O	S	U
DewateringPump_02_pp	Dewatering Pump--DeWPump	457531	5633531	104	0	O	S	U
DewateringPump_02_bp	Dewatering Pump--DeWPump	452237	5635504	104	0	O	S	U
DewateringPump_01_tf	Dewatering Pump--DeWPump	453824	5635199	104	0	O	S	U
DewateringPump_01_q	Dewatering Pump--DeWPump	451767	5636132	104	0	O	S	U
DewateringPump_01_pp	Dewatering Pump--DeWPump	456267	5634497	104	0	O	S	U
DewateringPump_01_bp	Dewatering Pump--DeWPump	452778	5637573	104	0	O	S	U
Wat_dixie_DieselGen_100kW_case	DieselGen_100kW_Case--Diesel GenSet Casing	457494	5633548	102	0	O	S	E
TMF_DamDiesel_DieselGen_case	DieselGen_100kW_Case--Diesel GenSet Casing	453824	5635915	102	0	O	S	E
TMF_dam_DieselGen_100kW_case	DieselGen_100kW_Case--Diesel GenSet Casing	454316	5635612	102	0	O	S	E
ExploStor_DieselGen_100kW_case	DieselGen_100kW_Case--Diesel GenSet Casing	459516	5634265	102	0	O	S	E
ExploMag_DieselGen_100kW_case	DieselGen_100kW_Case--Diesel GenSet Casing	458543	5634706	102	0	O	S	E
TMF_DamDieselGen_100kW_ex	DieselGen_100kW_Ex--Diesel GenSet Exhaust	454302	5635617	94	0	O	S	S
ExploStorageDieselGenSet_100kW_ex	DieselGen_100kW_Ex--Diesel GenSet Exhaust	459519	5634266	94	0	O	S	S
ExploMagazineDieselGenSet_100kW_ex	DieselGen_100kW_Ex--Diesel GenSet Exhaust	458547	5634708	94	0	O	S	S

Table A-3: Underground Production Phase - Noise Source Summary

Project: Great Bear Project
Location: Red Lake, ON

Source ID [1]	Source Description	Source Location NAD 83 / UTM zone 15N		Sound Power Level [3]	Sound Power Level Adjustment [3]	Source Location [4]	Sound Characteristics [5]	Noise Control Measures [6]
		Latitude [2]	Longitude [2]					
		(m)	(m)	(dBA)	(+dB)	(I or O)	(S,Q,I,B,T,C)	(S,A,B,L,E,O,U)
DixieDewateringDieselGen_100kW_ex	DieselGen_100kW_Ex--Diesel GenSet Exhaust	457488	5633549	94	0	O	S	S
100 kW DieselGen exhaust - TMF Dam	DieselGen_100kW_Ex--Diesel GenSet Exhaust	453822	5635913	94	0	O	S	S
DieselGenSet_200kW_Shaft	DieselGen_200kW_Case--Diesel GenSet Casing	456210	5634300	100	0	O	S	E
DieselGenset 200 kW casing - Chakuni I	DieselGen_200kW_Case--Diesel GenSet Casing	464942	5633802	100	0	O	S	E
DieselGenSet_200 kW exhaust - Chakun	DieselGen_200kW_Ex--Diesel GenSet Exhaust	464929	5633802	94	0	O	S	S
DieselGenset 200kw_Shaft_ex	DieselGen_200kW_Ex--Diesel GenSet Exhaust	456211	5634300	94	0	O	S	S
DieselGenSet_50 kW casing - Chakuni R	DieselGen_50kW_Case--Diesel GenSet Casing	463813	5633822	100	0	O	S	E
DieselGenSet_50kW exhaust - Chakuni I	DieselGen_50kW_Ex--Diesel GenSet Exhaust	463804	5633822	91	0	O	S	S
DiePump_05_pp	Diesel Pump--HL250M	458489	5633251	87	0	O	S	U
DiePump_04_pp	Diesel Pump--HL250M	457824	5633714	87	0	O	S	U
DiePump_03_pp	Diesel Pump--HL250M	458834	5633200	87	0	O	S	U
DiePump_02_pp	Diesel Pump--HL250M	456756	5634522	87	0	O	S	U
DiePump_01_pp	Diesel Pump--HL250M	457422	5634323	87	0	O	S	U
Exca_CAT336_03_tf	Excavator--CAT 336	452723	5637385	105	0	O	S	U
Exca_CAT336_02_tf	Excavator--CAT 336	452176	5636093	105	0	O	S	U
Exca_CAT336_01_tf	Excavator--CAT 336	454238	5636084	105	0	O	S	U
Excavator_CAT374_03_pp	Excavator--CAT 374	456092	5635245	107	0	O	S	U
Excavator_CAT374_02_pp	Excavator--CAT 374	457511	5633583	107	0	O	S	U
Excavator_CAT374_01_pp	Excavator--CAT 374	456762	5634590	107	0	O	S	U
FlotationTailingsThickerPump	Flotation Tailings Thickener Overflow Pump	454986	5635236	107	0	O	S	U
FlotationTailingsThickerPump	Flotation Tailings Thickener Feed Pump, 160kW--Outside building	454980	5635230	110	0	O	S	U
Fork_CATDP4055_05_pp	Forklift--Cat DP40-55(C)N3, 5.5t	455010	5635192	99	0	O	S	U
Fork_CATDP4055_04_pp	Forklift--Cat DP40-55(C)N3, 5.5t	455071	5635488	99	0	O	S	U
Fork_CATDP4055_03_pp	Forklift--Cat DP40-55(C)N3, 5.5t	455010	5635192	99	0	O	S	U
Fork_CATDP4055_02_pp	Forklift--Cat DP40-55(C)N3, 5.5t	455065	5635441	99	0	O	S	U
Fork_CATDP4055_01_pp	Forklift--Cat DP40-55(C)N3, 5.5t	455143	5635305	99	0	O	S	U
FrontLoaderSmallerCAT966_02_pp	Front End Loader (smaller)--CAT 966	458085	5635108	109	0	O	S	U
FrontLoaderSmallerCAT966_01_pp	Front End Loader (smaller)--CAT 966	456249	5635075	109	0	O	S	U
FrontLoaderCAT993_03_pp	Front End Loader--CAT993	458169	5635307	116	0	O	S	U
FrontLoaderCAT993_02_pp	Front End Loader--CAT993	456570	5635590	116	0	O	S	U
FurnaceDustCollector	FurnaceBag Dust Collector	455020	5635137	103	0	O	S	U
FusionMachine_03_pp	Fusion Machine--Ritmo Delta 250	455249	5634740	105	0	O	S	U
FusionMachine_02_pp	Fusion Machine--Ritmo Delta 250	458042	5634903	105	0	O	S	U
FusionMachine_01_pp	Fusion Machine--Ritmo Delta 250	455321	5634613	105	0	O	S	U
CrushFeeder_CAT777_idling	Haul Truck--CAT 777F	454807	5634653	121	0	O	S	U
HVAC_warmSB_in	HVAC_inlet--	455070	5635307	94	0	O	S	U
HVAC_warmSB_in	HVAC_inlet--	455098	5635352	94	0	O	S	U
HVAC_Truck_S_in	HVAC_inlet--	455264	5634595	94	0	O	S	U

Table A-3: Underground Production Phase - Noise Source Summary

Project: Great Bear Project
Location: Red Lake, ON

Source ID [1]	Source Description	Source Location NAD 83 / UTM zone 15N		Sound Power Level [3]	Sound Power Level Adjustment [3]	Source Location [4]	Sound Characteristics [5]	Noise Control Measures [6]
		Latitude [2]	Longitude [2]					
		(m)	(m)	(dBA)	(+dB)	(I or O)	(S,Q,I,B,T,C)	(S,A,B,L,E,O,U)
HVAC_TreatPlant_in	HVAC_inlet--	455258	5634527	94	0	O	S	U
HVAC_TireRS_in	HVAC_inlet--	455024	5635524	94	0	O	S	U
HVAC_Storage_in	HVAC_inlet--	455193	5634629	94	0	O	S	U
HVAC_st_in	HVAC_inlet--	455077	5635417	94	0	O	S	U
HVAC_Mag_S_in	HVAC_inlet--	458548	5634692	94	0	O	S	U
HVAC_Mag_S_in	HVAC_inlet--	458550	5634690	94	0	O	S	U
HVAC_Mag_S_in	HVAC_inlet--	458551	5634688	94	0	O	S	U
HVAC_Mag_S_in	HVAC_inlet--	458553	5634686	94	0	O	S	U
HVAC_Kitchen_in	HVAC_inlet--	455122	5634526	94	0	O	S	U
HVAC_Emul_in	HVAC_inlet--	459497	5634265	94	0	O	S	U
HVAC_Emul_in	HVAC_inlet--	459498	5634262	94	0	O	S	U
HVAC_Emul_in	HVAC_inlet--	459500	5634260	94	0	O	S	U
HVAC_Emul_in	HVAC_inlet--	459502	5634258	94	0	O	S	U
HVAC_cs_in	HVAC_inlet--	454994	5635377	94	0	O	S	U
HVAC_CAMP_in	HVAC_inlet--	457216	5637213	94	0	O	S	U
HVAC_CAMP_in	HVAC_inlet--	457215	5637232	94	0	O	S	U
HVAC_CAMP_in	HVAC_inlet--	457214	5637252	94	0	O	S	U
HVAC_CAMP_in	HVAC_inlet--	457213	5637270	94	0	O	S	U
HVAC_CAMP_in	HVAC_inlet--	457213	5637288	94	0	O	S	U
HVAC_CAMP_in	HVAC_inlet--	457213	5637307	94	0	O	S	U
HVAC_CAMP_in	HVAC_inlet--	457213	5637324	94	0	O	S	U
HVAC_CAMP_in	HVAC_inlet--	457213	5637372	94	0	O	S	U
HVAC_CAMP_in	HVAC_inlet--	457213	5637391	94	0	O	S	U
HVAC_CAMP_in	HVAC_inlet--	457272	5637391	94	0	O	S	U
HVAC_CAMP_in	HVAC_inlet--	457272	5637373	94	0	O	S	U
HVAC_CAMP_in	HVAC_inlet--	457285	5637325	94	0	O	S	U
HVAC_CAMP_in	HVAC_inlet--	457285	5637307	94	0	O	S	U
HVAC_CAMP_in	HVAC_inlet--	457286	5637287	94	0	O	S	U
HVAC_CAMP_in	HVAC_inlet--	457286	5637270	94	0	O	S	U
HVAC_CAMP_in	HVAC_inlet--	457286	5637252	94	0	O	S	U
HVAC_CAMP_in	HVAC_inlet--	457287	5637232	94	0	O	S	U
HVAC_CAMP_in	HVAC_inlet--	457287	5637213	94	0	O	S	U
HVAC_CAMP_in	HVAC_inlet--	454997	5635099	94	0	O	S	U
HVAC_CAMP_C_in	HVAC_inlet--	455093	5634514	94	0	O	S	U
HVAC_CAMP_B_in	HVAC_inlet--	455077	5634521	94	0	O	S	U
HVAC_CAMP_A_in	HVAC_inlet--	455060	5634530	94	0	O	S	U
HVAC_Admin_in	HVAC_inlet--	455116	5634568	94	0	O	S	U
HVAC_admin_B_in	HVAC_inlet--	455119	5635268	94	0	O	S	U

Table A-3: Underground Production Phase - Noise Source Summary

Project: Great Bear Project
Location: Red Lake, ON

Source ID [1]	Source Description	Source Location NAD 83 / UTM zone 15N		Sound Power Level [3]	Sound Power Level Adjustment [3]	Source Location [4]	Sound Characteristics [5]	Noise Control Measures [6]
		Latitude [2]	Longitude [2]					
		(m)	(m)	(dBA)	(+dB)	(I or O)	(S,Q,I,B,T,C)	(S,A,B,L,E,O,U)
HVAC_admin_B_in	HVAC_inlet--	455151	5635412	94	0	O	S	U
HVAC_admin_B_in	HVAC_inlet--	455191	5635224	94	0	O	S	U
HVAC_warmSB_out	HVAC_outlet--	455065	5635312	89	0	O	S	U
HVAC_warmSB_out	HVAC_outlet--	455093	5635356	89	0	O	S	U
HVAC_TREATPlant_out	HVAC_outlet--	455261	5634525	89	0	O	S	U
HVAC_TireRS_out	HVAC_outlet--	455020	5635526	89	0	O	S	U
HVAC_Storage_out	HVAC_outlet--	455196	5634628	89	0	O	S	U
HVAC_st_out	HVAC_outlet--	455073	5635419	89	0	O	S	U
HVAC_Mag_S_out	HVAC_outlet--	458548	5634692	89	0	O	S	U
HVAC_Mag_S_out	HVAC_outlet--	458550	5634690	89	0	O	S	U
HVAC_Mag_S_out	HVAC_outlet--	458551	5634688	89	0	O	S	U
HVAC_Mag_S_out	HVAC_outlet--	458553	5634686	89	0	O	S	U
HVAC_Kitchen_out	HVAC_outlet--	455125	5634524	89	0	O	S	U
HVAC_Emul_out	HVAC_outlet--	459497	5634265	89	0	O	S	U
HVAC_Emul_out	HVAC_outlet--	459498	5634262	89	0	O	S	U
HVAC_Emul_out	HVAC_outlet--	459500	5634260	89	0	O	S	U
HVAC_Emul_out	HVAC_outlet--	459502	5634259	89	0	O	S	U
HVAC_cs_out	HVAC_outlet--	454989	5635379	89	0	O	S	U
HVAC_coreS_out	HVAC_outlet--	455189	5635222	89	0	O	S	U
HVAC_CAMP_out	HVAC_outlet--	457223	5637213	89	0	O	S	U
HVAC_CAMP_out	HVAC_outlet--	457223	5637233	89	0	O	S	U
HVAC_CAMP_out	HVAC_outlet--	457223	5637250	89	0	O	S	U
HVAC_CAMP_out	HVAC_outlet--	457223	5637270	89	0	O	S	U
HVAC_CAMP_out	HVAC_outlet--	457223	5637287	89	0	O	S	U
HVAC_CAMP_out	HVAC_outlet--	457223	5637305	89	0	O	S	U
HVAC_CAMP_out	HVAC_outlet--	457223	5637325	89	0	O	S	U
HVAC_CAMP_out	HVAC_outlet--	457223	5637371	89	0	O	S	U
HVAC_CAMP_out	HVAC_outlet--	457223	5637391	89	0	O	S	U
HVAC_CAMP_out	HVAC_outlet--	457279	5637392	89	0	O	S	U
HVAC_CAMP_out	HVAC_outlet--	457278	5637374	89	0	O	S	U
HVAC_CAMP_out	HVAC_outlet--	457292	5637326	89	0	O	S	U
HVAC_CAMP_out	HVAC_outlet--	457292	5637308	89	0	O	S	U
HVAC_CAMP_out	HVAC_outlet--	457292	5637288	89	0	O	S	U
HVAC_CAMP_out	HVAC_outlet--	457292	5637271	89	0	O	S	U
HVAC_CAMP_out	HVAC_outlet--	457292	5637252	89	0	O	S	U
HVAC_CAMP_out	HVAC_outlet--	457293	5637233	89	0	O	S	U
HVAC_CAMP_out	HVAC_outlet--	457294	5637214	89	0	O	S	U
HVAC_CAMP_out	HVAC_outlet--	455004	5635099	89	0	O	S	U

Table A-3: Underground Production Phase - Noise Source Summary

Project: Great Bear Project
Location: Red Lake, ON

Source ID [1]	Source Description	Source Location NAD 83 / UTM zone 15N		Sound Power Level [3]	Sound Power Level Adjustment [3]	Source Location [4]	Sound Characteristics [5]	Noise Control Measures [6]
		Latitude [2]	Longitude [2]					
		(m)	(m)	(dBA)	(+dB)	(I or O)	(S,Q,I,B,T,C)	(S,A,B,L,E,O,U)
HVAC_CAMP_C_out	HVAC_outlet--	455092	5634512	89	0	O	S	U
HVAC_CAMP_B_out	HVAC_outlet--	455076	5634519	89	0	O	S	U
HVAC_CAMP_A_out	HVAC_outlet--	455059	5634527	89	0	O	S	U
HVAC_Admin_out	HVAC_outlet--	455119	5634566	89	0	O	S	U
HVAC_admin_out	HVAC_outlet--	455116	5635270	89	0	O	S	U
HVAC_admin_out	HVAC_outlet--	455148	5635414	89	0	O	S	U
DustCollectorJawCrusher_pr	Dust Collector for Jaw Crusher feeder	454822	5634661	103	0	O	S	U
LeachBlower_280kW	Leach Blower, 280kW--6000 cfm inside building	455055	5635170	82	0	O	S	U
LeachTankAgitator_6	Leach Tank Agitator, 150kW--Outside building	455045	5635187	102	0	O	S	U
LeachTankAgitator_5	Leach Tank Agitator, 150kW--Outside building	455024	5635187	102	0	O	S	U
LeachTankAgitator_4	Leach Tank Agitator, 150kW--Outside building	455035	5635170	102	0	O	S	U
LeachTankAgitator_3	Leach Tank Agitator, 150kW--Outside building	455014	5635170	102	0	O	S	U
LeachTankAgitator_2	Leach Tank Agitator, 150kW--Outside building	455025	5635152	102	0	O	S	U
LeachTankAgitator_1	Leach Tank Agitator, 150kW--Outside building	455004	5635152	102	0	O	S	U
DustCollectorLimeSilo	Lime Silo Dust Collector	455069	5635123	103	0	O	S	U
MobileCrane150t_pp	150t Mobile Crane--MobCrane150t	455063	5635157	108	0	O	S	U
MobileCrane50t_01_pp	50t Mobile Crane--Tadano GR-500XL	454983	5635192	112	0	O	S	U
5 MW NaturalGasPower Casing - Power	5 MW Natural Gas-Fired Reciprocating Engine Casing	457003	5636634	117	0	O	S	E
5 MW NaturalGasPower Casing - Power	5 MW Natural Gas-Fired Reciprocating Engine Casing	457007	5636629	117	0	O	S	E
5 MW NaturalGasPower Casing - Power	5 MW Natural Gas-Fired Reciprocating Engine Casing	457012	5636622	117	0	O	S	E
5 MW NaturalGasPower Casing - Power	5 MW Natural Gas-Fired Reciprocating Engine Casing	457016	5636616	117	0	O	S	E
5 MW NaturalGasPower Casing - Power	5 MW Natural Gas-Fired Reciprocating Engine Casing	457021	5636610	117	0	O	S	E
5 MW NaturalGasPower Casing - Power	5 MW Natural Gas-Fired Reciprocating Engine Casing	457025	5636604	117	0	O	S	E
5 MW NaturalGasPower Casing - Power	5 MW Natural Gas-Fired Reciprocating Engine Casing	457028	5636598	117	0	O	S	E
5 MW NaturalGasPower Casing - Power	5 MW Natural Gas-Fired Reciprocating Engine Casing	457032	5636593	117	0	O	S	E
5 MW NaturalGasPower Casing - Power	5 MW Natural Gas-Fired Reciprocating Engine Casing	457035	5636590	117	0	O	S	E
5 MW Gen Exhaust - Power Plant	5 MW Natural Gas-Fired Reciprocating Engine outlet-- Exhaust	457005	5636636	104	0	O	S	S
5 MW Gen Exhaust - Power Plant	5 MW Natural Gas-Fired Reciprocating Engine outlet-- Exhaust	457009	5636630	104	0	O	S	S
5 MW Gen Exhaust - Power Plant	5 MW Natural Gas-Fired Reciprocating Engine outlet-- Exhaust	457014	5636624	104	0	O	S	S
5 MW Gen Exhaust - Power Plant	5 MW Natural Gas-Fired Reciprocating Engine outlet-- Exhaust	457018	5636617	104	0	O	S	S
5 MW Gen Exhaust - Power Plant	5 MW Natural Gas-Fired Reciprocating Engine outlet-- Exhaust	457023	5636611	104	0	O	S	S
5 MW Gen Exhaust - Power Plant	5 MW Natural Gas-Fired Reciprocating Engine outlet-- Exhaust	457027	5636605	104	0	O	S	S
5 MW Gen Exhaust - Power Plant	5 MW Natural Gas-Fired Reciprocating Engine outlet-- Exhaust	457030	5636599	104	0	O	S	S
5 MW Gen Exhaust - Power Plant	5 MW Natural Gas-Fired Reciprocating Engine outlet-- Exhaust	457034	5636594	104	0	O	S	S
5 MW Gen Exhaust - Power Plant	5 MW Natural Gas-Fired Reciprocating Engine outlet-- Exhaust	457037	5636591	104	0	O	S	S
PastePlantDustCollector	Paste Plant Dust Collector	456264	5633996	103	0	O	S	U
PreLeachThickenerPump	Horizontal centrifugal slurry--Pre-leach Thickener Underflow Pump 1	455051	5635134	110	0	O	S	U
PrimaryDrill_D65_02_q	Primary Drill--140mm SmartRoc D65	451725	5635925	125	0	O	S	U

Table A-3: Underground Production Phase - Noise Source Summary

Project: Great Bear Project
Location: Red Lake, ON

Source ID [1]	Source Description	Source Location NAD 83 / UTM zone 15N		Sound Power Level [3]	Sound Power Level Adjustment [3]	Source Location [4]	Sound Characteristics [5]	Noise Control Measures [6]
		Latitude [2]	Longitude [2]					
		(m)	(m)	(dBA)	(+dB)	(I or O)	(S,Q,I,B,T,C)	(S,A,B,L,E,O,U)
PrimaryDrill_D65_01_q	Primary Drill--140mm SmartRoc D65	451837	5636060	125	0	O	S	U
ProcessWaterPump_250kW	Process Water Pump, 250kW--Inside building	455029	5635135	112	0	O	S	U
RockCrusher_UD211_01_q	Rock Crusher--Sandvik UD211	451654	5635987	121	0	O	S	U
DustCollectorConveyourSF	Sacrificial Conveyor to Stockpile Feed Conveyor Dust Collector	454893	5634907	103	0	O	S	U
Shovel_10m3_pp	Shovel 10.0 m3--CAT 6015	455666	5635063	114	0	O	S	U
Skidder_JD640_02_tf	Skidder--JD 640L	454129	5635973	114	0	O	S	U
Skidder_JD640_01_tf	Skidder--JD 640L	453607	5635623	114	0	O	S	U
SkidSteer_CAT650_02_pp	Skid Steer--Bobcat S650	455030	5635197	101	0	O	S	U
SkidSteer_CAT650_01_pp	Skid Steer--Bobcat S650	454959	5635414	101	0	O	S	U
SnapAirBlower_PastePlant	Paste Plant (Backfill) Outdoors--Snap Air Blower 1	456280	5633988	68	0	O	S	U
Tailings_to_PastePump	Tailings to Paste Plant Pump 1	454971	5635225	107	0	O	S	U
Tailings_to_PastePump	Tailings to Paste Plant Pump 1	454967	5635218	107	0	O	S	U
TailingsPump	Tailings Pump	454966	5635181	108	0	O	S	U
TailingsStorageTankAgitator	Paste Plant (Backfill) Outdoors--Tailings Storage Tank Agitator	456324	5633960	102	0	O	S	U
CyaniteTankAgitator	Cyanide Destruction Tank 1 Agitator	455002	5635190	102	0	O	S	U
CyaniteTankAgitator	Cyanide Destruction Tank 1 Agitator	454992	5635195	102	0	O	S	U
ThickenerRecirculatingPump	Paste Plant (Backfill) Outdoors--Thickener Recirculation Pump	456309	5633969	100	0	O	S	U
ThickerUFPumpPastePlant	Paste Plant (Backfill) Outdoors--Thickener UF Pump	456294	5633978	100	0	O	S	U
TLB_CAT422_02_pp	TLB--Cat 422F2	454918	5634890	99	0	O	S	U
TLB_CAT422_01_pp	TLB--Cat 422F2	454796	5634624	99	0	O	S	U
Transformer_600kVA	600 kVA--Transformer	459509	5634259	66	0	O	S	U
VentilationFan_Discovery_FAR	UG ventilation for Discovery Fresh Air Raise	455416	5634887	112	0	O	S	O
VentilationFan_Discovery_FAR	UG ventilation for Discovery Fresh Air Raise	455416	5634888	112	0	O	S	O
VentilationFan_Discovery_RAR	UG ventilation for Discovery Return Air Raise	455254	5635069	110	0	O	S	O
VentilationFan_Discovery_RAR	UG ventilation for Discovery Return Air Raise	455254	5635070	110	0	O	S	O
VentilationFan_AEX	VentFan_aex--UG AEX Portal Ventilation Fan	455504	5634507	129	0	O	S	U
VentilationFan_HingeLimb_FAR2	UG ventilation for Hinge and Limb Fresh Air Raise 2	456756	5633595	130	0	O	S	U
VentilationFan_HingeLimb_FAR2	UG ventilation for Hinge and Limb Fresh Air Raise 2	456757	5633595	130	0	O	S	U
VentilationFan_HingeLimb_RAR	UG ventilation for Hinge and Limb Return Air Raise	456248	5633604	108	0	O	S	O
VentilationFan_HingeLimb_RAR	UG ventilation for Hinge and Limb Return Air Raise	456248	5633605	108	0	O	S	O
VentilationFan_LP_RAR1	VF_LP_RAR1--LP Return Air Raise	456412	5634335	116	0	O	S	O
VentilationFan_LP_RAR1	VF_LP_RAR1--LP Return Air Raise	456411	5634335	116	0	O	S	O
VentilationFan_LP_RAR2	VF_LP_RAR2--LP Return Air Raise	457914	5633559	114	0	O	S	O
VentilationFan_LP_RAR2	VF_LP_RAR2--LP Return Air Raise	457914	5633559	114	0	O	S	O
VentilationFan_VIG_FAR	VF_VIG_FAR--Viggo Fresh Air Raise	458303	5633318	110	0	O	S	U
VentilationFan_VIG_FAR	VF_VIG_FAR--Viggo Fresh Air Raise	458303	5633318	110	0	O	S	U
VentilationFan_VIG_RAR	VF_VIG_RAR--Viggo Return Air Raise	458286	5633457	105	0	O	S	O
VentilationFan_VIG_RAR	VF_VIG_RAR--Viggo Return Air Raise	458286	5633457	105	0	O	S	O

Table A-3: Underground Production Phase - Noise Source Summary

Project: Great Bear Project
Location: Red Lake, ON

Source ID [1]	Source Description	Source Location NAD 83 / UTM zone 15N		Sound Power Level [3]	Sound Power Level Adjustment [3]	Source Location [4]	Sound Characteristics [5]	Noise Control Measures [6]
		Latitude [2]	Longitude [2]					
		(m)	(m)	(dBA)	(+dB)	(I or O)	(S,Q,I,B,T,C)	(S,A,B,L,E,O,U)
UGR9_Art40t_WestDam_to_OVB5	Articulating Truck--40t	452288	5635764	89	0	O	S	U
UGR8 SouthDam to Overburden#3	Articulating Truck--40t	454331	5636070	96	0	O	S	U
UGR7 NorthDam to Overburden#4	Articulating Truck--40t	453094	5637426	88	0	O	S	U
UGR22 TMF Facility to WestDam	Articulating Truck--40t	453239	5635308	105	0	O	S	U
UGR21 TMF Facility to SouthDam	Articulating Truck--40t	454133	5635916	101	0	O	S	U
UGR20_40t_TMFFacility_to_NorthDam	Articulating Truck--40t	453662	5636732	101	0	O	S	U
BlastTruck_F350_q	Blasters Truck--F350	452743	5635112	96	0	O	S	U
Loader_CAT966_bp	Borrow Source - Loader (FEL)--CAT 966	453641	5637409	96	0	O	S	U
BusPersonnel_05_pp	Bus (60 seats)--BusPersonnel	453188	5635028	94	0	O	S	U
BusPersonnel_04_pp	Bus (60 seats)--BusPersonnel	457575	5634979	86	0	O	S	U
BusPersonnel_03_pp	Bus (60 seats)--BusPersonnel	457324	5635674	87	0	O	S	U
BusPersonnel_02_pp	Bus (60 seats)--BusPersonnel	455010	5634707	86	0	O	S	U
BusPersonnel_01_pp	Bus (60 seats)--BusPersonnel	457283	5635613	94	0	O	S	U
ContainerTrailerTruck_pp	Container Trailer Truck--ContTT	455821	5636162	95	0	O	S	U
ArticulatedTruckCAT740_01_tf	EJ Articulated Trucks--CAT 740	454377	5636095	112	0	O	S	U
FlatBedBoomTruck_tf	Flat Bed or Boom Truck --	454134	5635899	98	0	O	S	U
FlatDeckTruck_pp	Flat Deck Truck--FlatDT	455812	5636162	103	0	O	S	U
FuelTankerTruck_CAT740_01_pp	Fuel Tanker Truck (30,000 L)--CAT 740	454928	5636851	96	0	O	S	U
FuelTankerTruck_02_pp	Fuel Tanker Truck (30,000 L)--CAT 740	455087	5634776	88	0	O	S	U
UGR23 AEXPortal to PAG Stockpile	Haul Truck--CAT 777F	457600	5635116	129	0	O	S	U
UGR19 NPAGStockpile to RoadBase	Haul Truck--CAT 777F	455817	5635744	119	0	O	S	U
UGR18 NPAG Stockpile to WestDam	Haul Truck--CAT 777F	454062	5635209	126	0	O	S	U
UGR17 BorrowSource#3 to WestDam	Haul Truck--CAT 777F	452940	5638224	112	0	O	S	U
UGR16 TMF Facility to WestDam	Haul Truck--CAT 777F	453239	5635308	119	0	O	S	U
UGR15 NPAG Stockpile to SouthDam	Haul Truck--CAT 777F	455644	5634754	133	0	O	S	U
UGR14 BorrowSource#3 to SouthDam	Haul Truck--CAT 777F	453600	5636747	114	0	O	S	U
UGR13 TMF Facility to SouthDam	Haul Truck--CAT 777F	454133	5635916	115	0	O	S	U
UGR11 BorrowSource#3 to NorthDam	Haul Truck--CAT 777F	452666	5637626	109	0	O	S	U
UGR10_777_TMFFacility_to_NorthDam	Haul Truck--CAT 777F	453662	5636732	115	0	O	S	U
UGR12 NPAG Stockpile to NorthDam	Haul Truck--CAT 777F	456061	5634521	127	0	O	S	U
UGR6 AEXPortal to NPAG Stockpile	Haul Truck--CAT 785	455911	5634557	116	0	O	S	U
UGR5 AEXPortal to PAG Stockpile	Haul Truck--CAT 785	456674	5635174	107	0	O	S	U
UGR4 Shaft to Crusher	Haul Truck--CAT 785	454658	5634283	107	0	O	S	U
UGR3 AEXPortal to Crusher	Haul Truck--CAT 785	455326	5634407	124	0	O	S	U
UGR2 LGO Stockpile big to Crusher	Haul Truck--CAT 785	455641	5634584	118	0	O	S	U
UGR1 LGO Stockpile west to Crusher	Haul Truck--CAT 785	455575	5634641	119	0	O	S	U
HighCubeTruck_pp	High Cube Truck--Ford F-650 SD DIESEL	455815	5636179	95	0	O	S	U
LowboyNTractor_75t_pp	Lowboy and Tractor--75ton - 100ton	456133	5636432	96	0	O	S	U

Table A-3: Underground Production Phase - Noise Source Summary

Project: Great Bear Project
Location: Red Lake, ON

Source ID [1]	Source Description	Source Location NAD 83 / UTM zone 15N		Sound Power Level [3]	Sound Power Level Adjustment [3]	Source Location [4]	Sound Characteristics [5]	Noise Control Measures [6]
		Latitude [2]	Longitude [2]					
		(m)	(m)	(dBA)	(+dB)	(I or O)	(S,Q,I,B,T,C)	(S,A,B,L,E,O,U)
MechanicsTruck_05_pp	Mechanics Truck--Mtruck	455113	5635106	92	0	O	S	U
MechanicsTruck_04_pp	Mechanics Truck--Mtruck	457572	5634979	87	0	O	S	U
MechanicsTruck_03_pp	Mechanics Truck--Mtruck	457323	5635686	88	0	O	S	U
MechanicsTruck_02_pp	Mechanics Truck--Mtruck	456003	5635292	89	0	O	S	U
MechanicsTruck_01_pp	Mechanics Truck--Mtruck	455871	5634975	92	0	O	S	U
PickUpTruck_F150_03_pp	Pick-up--F150	456654	5635107	102	0	O	S	U
PickUp_F150_q	Pick-up--F150	454043	5635787	95	0	O	S	U
PickUp_F150_02_pp	Pick-up--F150	453974	5636342	107	0	O	S	U
PickUp_F150_01_pp	Pick-up--F150	454420	5593075	104	0	O	S	U
LightDutyPickUp_tf	Pick-up--F150	452684	5637125	95	0	O	S	U
PortableWaterTruck_pp	Portable Water Truck--PoWT	455977	5635923	96	0	O	S	U
RoadGrader_CAT16_03_pp	Road Grader--CAT 16	454002	5636613	104	0	O	S	U
RoadGrader_CAT16_02_pp	Road Grader--CAT 16	453774	5635588	109	0	O	S	U
RoadGrader_CAT16_01_pp	Road Grader--CAT 16	457497	5635861	107	0	O	S	U
SewageCollectionTruck_pp	Sewage Collection Truck--SewColTruck	454965	5634912	94	0	O	S	U
SnowWaterTruck_02_pp	Snow Plow/Water Truck--T880	457810	5634435	101	0	O	S	U
SnowWaterTruck_01_pp	Snow Plow/Water Truck--T880	456666	5635129	103	0	O	S	U
ProductionConveyor	Stockpile Conveyor--w=1.35m; l=183m; 28.1m rise	454815	5634690	114	0	O	S	U
ProductionConveyor	Stockpile Conveyor--w=1.35m; l=183m; 28.1m rise	454996	5635057	110	0	O	S	U
ProductionConveyor	Stockpile Conveyor--w=1.35m; l=183m; 28.1m rise	455002	5635082	110	0	O	S	U
CRF_conveyor	Stockpile Conveyor--w=1.35m; l=183m; 28.1m rise	455795	5634488	104	0	O	S	U
TandemWaterTruck_2500_pr	Tadem Water Trucks-- 2500 gls	454099	5635105	107	0	O	S	U
UG_BusPersonnel	UG Bus passenger	455225	5634563	92	0	O	S	U
UG_CRF_Truck	UG CRF Truck	454483	5634956	101	0	O	S	U
UG_EmulsionDevCarrier	UG Emulsion Dev-carrier	455320	5634493	100	0	O	S	U
UG_EmulsionProdCarrier	UG Emulsion Prod-carrier	455252	5634499	94	0	O	S	U
UG_FuelNLube	UG Boom Truck	455271	5634560	85	0	O	S	U
UG_Grader	UG Grader	455268	5634552	97	0	O	S	U
UG_JeepPersonnel	UG Jeep personnel carrier	455179	5634597	95	0	O	S	U
UG_JeepVehicle	UG Jeep maintenance vehicle	455270	5634587	84	0	O	S	U
UG_MobileCrane	UG Terrain mobile crane	455270	5634588	80	0	O	S	U
UG_RoughTerrainFork	UG Rough Terrain Forklift	455273	5634561	91	0	O	S	U
UG_Scissor	UG Scissor lift	455269	5634586	99	0	O	S	U
UG_Shotcrete	UG Shotcrete Sprayer	454830	5634829	100	0	O	S	U
UG_TractorForkBackhoe	UG Tractor with Fork and Backhoe	455271	5634587	95	0	O	S	U
UG_TransMixer	UG Transmixer	454481	5634957	97	0	O	S	U
UG_WaterSpryer	UG Water spryer w/carrier	455267	5634588	86	0	O	S	U
UG_Truck_50t	UG Truck 50t	455362	5634630	98	0	O	S	U

Table A-3: Underground Production Phase - Noise Source Summary

Project: Great Bear Project
Location: Red Lake, ON

Source ID [1]	Source Description	Source Location NAD 83 / UTM zone 15N		Sound Power Level [3]	Sound Power Level Adjustment [3]	Source Location [4]	Sound Characteristics [5]	Noise Control Measures [6]
		Latitude [2]	Longitude [2]					
		(m)	(m)	(dBA)	(+dB)	(I or O)	(S,Q,I,B,T,C)	(S,A,B,L,E,O,U)
UG_BoomTruck	UG Boom Truck	455264	5634544	98	0	O	S	U
WaterTruck_CAT740_01_pp	Water Truck (30,000 L)--CAT 740	453023	5634224	94	0	O	S	U
WaterTruck_02_pp	Water Truck (30,000 L)--CAT 740	458874	5635007	95	0	O	S	U
BackHoe_330_bp	Backhoe--330	452336	5638238	104	0	O	S	U
CFR_Plant	CFR Plant Area	455800	5634485	117	0	O	S	U
Compactor_CAT64B_01_tf	Compactor--CAT CS64B	452496	5637260	108	0	O	S	U
Compactor_CAT64B_02_tf	Compactor--CAT CS64B	452187	5636018	108	0	O	S	U
Compactor_CAT64B_03_tf	Compactor--CAT CS64B	454098	5635423	108	0	O	S	U
Dozer_CAT_D10_02_pp	Dozer - D10--CAT D10	457243	5636017	116	0	O	S	U
Dozer_CAT_D10_pp	Dozer - D10--CAT D10	456166	5635148	116	0	O	S	U
Dozer_CAT_D6_01_pp	Dozer - D6--CAT D6	458103	5635337	113	0	O	S	U
Dozer_CAT_D6_01_tf	Dozer - D6--CAT D6	454276	5637129	116	0	O	S	U
Dozer_CAT_D6_02_pp	Dozer - D6--CAT D6	457936	5635113	113	0	O	S	U
Dozer_CAT_D6_02_tf	Dozer - D6--CAT D6	454882	5636343	113	0	O	S	U
Dozer_CAT_D6_03_pp	Dozer - D6--CAT D6	456069	5635909	113	0	O	S	U
Dozer_CAT_D6_bp	Dozer - D6--CAT D6	452794	5637619	113	0	O	S	U
Dozer_CAT_D8_pit	Dozer--CAT D8	456567	5635595	120	0	O	S	U
Dozer_CAT_D8_q	Dozer--CAT D8	451781	5636006	117	0	O	S	U
Dozer_CAT_D8_tf	Dozer--CAT D8	453671	5635741	120	0	O	S	U
Excavator_CAT_D6_01_tf	EX Dozer--CAT D6	452377	5635465	113	0	O	S	U
Excavator_CAT_D6_02_tf	EX Dozer--CAT D6	453714	5637521	113	0	O	S	U
IntegratedToolCarrier_pp	Integrated Tool Carrier--WA200-7	456559	5636226	104	0	O	S	U
PastePlantFacade_Top	Paste Plant top--	456309	5634004	108	0	O	S	U
Primary Crusher_Top	Primary Crusher Top--	454809	5634673	117	0	O	S	U
ProcessPlant_top	Proces Plant Input Top--	454989	5635119	108	0	O	S	U
Loader_L1350_q	Quarry Source - Production Loader--L-1350 (23m3)	452363	5636561	120	0	O	S	U
BackHow_PC1250_q	Quarry Source - Production Backhoe--PC1250 (6.7m3)	452247	5636838	110	0	O	S	U
SubstationArea	Substation Area cumulative	457053	5636648	97	0	O	S	U
TransferTowerPebbleCrusher_Top	Transfer Tower Pebble Crusher Top	454946	5634993	116	0	O	S	U
PastePlant_F1	Paste Plant facade 1--	-	-	106	0	O	S	U
PastePlant_F2	Paste Plant facade 2--	-	-	107	0	O	S	U
PastePlant_F3	Paste Plant facade 3--	-	-	106	0	O	S	U
PastePlant_F4	Paste Plant facade 4--	-	-	107	0	O	S	U
PrimaryCrusher_F1	Primary Crusher facade 1--	-	-	120	0	O	S	U
PrimaryCrusher_F2	Primary Crusher facade 2--	-	-	117	0	O	S	U
PrimaryCrusher_F3	Primary Crusher facade 3--	-	-	120	0	O	S	U
PrimaryCrusher_F4	Primary Crusher facade 4--	-	-	114	0	O	S	U
Primary_F4_binOP	PriCru_fac_4_binOp--	-	-	115	0	O	S	U

Table A-3: Underground Production Phase - Noise Source Summary

Project: Great Bear Project
Location: Red Lake, ON

Source ID [1]	Source Description	Source Location NAD 83 / UTM zone 15N		Sound Power Level [3]	Sound Power Level Adjustment [3]	Source Location [4]	Sound Characteristics [5]	Noise Control Measures [6]
		Latitude [2]	Longitude [2]					
		(m)	(m)	(dBA)	(+dB)	(I or O)	(S,Q,I,B,T,C)	(S,A,B,L,E,O,U)
ProcessPlant_F1	Proces Plant Input Facade 1--	-	-	101	0	O	S	U
ProcessPlant_F2	Proces Plant Input Facade 2--	-	-	105	0	O	S	U
ProcessPlant_F3	Proces Plant Input Facade 3--	-	-	101	0	O	S	U
ProcessPlant_F4	Proces Plant Input Facade 4--	-	-	105	0	O	S	U
TransferTowerPebbleCrusher_F1	Transfer Tower Pebble Crusher facade 1	-	-	117	0	O	S	U
TransferTowerPebbleCrusher_F2	Transfer Tower Pebble Crusher facade 2	-	-	116	0	O	S	U
TransferTowerPebbleCrusher_F3	Transfer Tower Pebble Crusher facade 3	-	-	117	0	O	S	U
TransferTowerPebbleCrusher_F4	Transfer Tower Pebble Crusher facade 4	-	-	116	0	O	S	U

Notes on Table:

1. Wherever possible, the Source ID matches the identifiers used in the ESDM report.
2. Source centre of gravity coordinates used for Line and Area sources. Vertical area source coordinates not provided since corresponding area source coordinates are provided.
3. Sound Power Level of Source, in dBA, including sound characteristic adjustments per NPC-104.
4. Source Location: O = Outside of building, including the roof, I = Inside of building
5. Sound Characteristic, per NPC-104
   S = Steady; I = Impulsive; T = Tonal
   Q = Quasi-Steady Impulsive; B = Buzzing; C = Cyclic
6. Noise Control Measures Included
   S = Silencer/Muffler; L = Lagging; O = Other
   A = Acoustic lining, plenum; E = acoustic enclosure; U = uncontrolled
   B = Barrier

Table A-3a: Underground Production Phase - Point of Reception Noise Impact

Daytime - LAeq,1hr

Project: Great Bear Project
Location: Red Lake, ON

Source ID	Source Description	Residence/Cabin/Lodge/Camp POR1 POR1 POR1 Point of Reception ID POR1			Residence/Cabin/Lodge/Camp POR4 POR4 POR4 Point of Reception ID POR4			Residence/Cabin/Lodge/Camp POR5 POR5 POR5 Point of Reception ID POR5			Residence/Cabin/Lodge/Camp POR6 POR6 POR6 Point of Reception ID POR6		
		Point of Reception Description			Point of Reception Description			Point of Reception Description			Point of Reception Description		
		Residence/Cabin/Lodge/Camp			Residence/Cabin/Lodge/Camp			Residence/Cabin/Lodge/Camp			Residence/Cabin/Lodge/Camp		
		Point of reception coordinates			Point of reception coordinates			Point of reception coordinates			Point of reception coordinates		
		X	Y	Z [2]	X	Y	Z [2]	X	Y	Z [2]	X	Y	Z [2]
		456965	5639223	372	451915	5639044	357	451671	5630891	354	465139	5634939	350
		Point of Reception 1			Point of Reception 4			Point of Reception 5			Point of Reception 6		
		Distance [3] (m)	Sound Level at PoR	Units [1] (dBA)	Distance [3] (m)	Sound Level at PoR	Units [1] (dBA)	Distance [3] (m)	Sound Level at PoR	Units [1] (dBA)	Distance [3] (m)	Sound Level at PoR	Units [1] (dBA)
TransferTowerPebbleCrusher_F1	Transfer Tower Pebble Crusher facade 1	MS	10	dBA	MS	10	dBA	MS	24	dBA	MS	2	dBA
TransferTowerPebbleCrusher_F2	Transfer Tower Pebble Crusher facade 2	MS	9	dBA	MS	9	dBA	MS	23	dBA	MS	15	dBA
TransferTowerPebbleCrusher_F3	Transfer Tower Pebble Crusher facade 3	MS	22	dBA	MS	24	dBA	MS	12	dBA	MS	16	dBA
TransferTowerPebbleCrusher_F4	Transfer Tower Pebble Crusher facade 4	MS	21	dBA	MS	23	dBA	MS	16	dBA	MS	1	dBA
TransferTowerPebbleCrusher_Top	Transfer Tower Pebble Crusher Top	4687	23	dBA	5060	18	dBA	5250	23	dBA	10193	15	dBA
PrimaryCrusher_F1	Primary Crusher facade 1--	MS	28	dBA	MS	12	dBA	MS	13	dBA	MS	19	dBA
PrimaryCrusher_F2	Primary Crusher facade 2--	MS	25	dBA	MS	24	dBA	MS	10	dBA	MS	16	dBA
PrimaryCrusher_F3	Primary Crusher facade 3--	MS	12	dBA	MS	27	dBA	MS	28	dBA	MS	4	dBA
PrimaryCrusher_F4	Primary Crusher facade 4--	MS	5	dBA	MS	6	dBA	MS	22	dBA	MS	-2	dBA
Primary_F4_binOP	PriCru_fac_4_binOp--	MS	7	dBA	MS	8	dBA	MS	21	dBA	MS	0	dBA
Primary Crusher_Top	Primary Crusher Top--	5035	25	dBA	5243	23	dBA	4915	25	dBA	10334	16	dBA
5 MW NaturalGasPower Casing - Powe	5 MW Natural Gas-Fired Reciprocating Engine Casing	2589	21	dBA	5629	9	dBA	7837	5	dBA	8311	3	dBA
5 MW NaturalGasPower Casing - Powe	5 MW Natural Gas-Fired Reciprocating Engine Casing	2613	21	dBA	5656	9	dBA	7832	5	dBA	8289	3	dBA
5 MW NaturalGasPower Casing - Powe	5 MW Natural Gas-Fired Reciprocating Engine Casing	2619	20	dBA	5662	9	dBA	7830	5	dBA	8283	3	dBA
5 MW NaturalGasPower Casing - Powe	5 MW Natural Gas-Fired Reciprocating Engine Casing	2625	20	dBA	5668	9	dBA	7828	5	dBA	8279	4	dBA
5 MW NaturalGasPower Casing - Powe	5 MW Natural Gas-Fired Reciprocating Engine Casing	2630	20	dBA	5673	9	dBA	7827	5	dBA	8274	4	dBA
5 MW NaturalGasPower Casing - Powe	5 MW Natural Gas-Fired Reciprocating Engine Casing	2634	20	dBA	5678	9	dBA	7826	5	dBA	8271	4	dBA
5 MW NaturalGasPower Casing - Powe	5 MW Natural Gas-Fired Reciprocating Engine Casing	2594	20	dBA	5636	9	dBA	7836	4	dBA	8306	3	dBA
5 MW NaturalGasPower Casing - Powe	5 MW Natural Gas-Fired Reciprocating Engine Casing	2601	21	dBA	5642	9	dBA	7834	4	dBA	8300	3	dBA
5 MW NaturalGasPower Casing - Powe	5 MW Natural Gas-Fired Reciprocating Engine Casing	2607	21	dBA	5649	9	dBA	7833	5	dBA	8294	3	dBA
5 MW Gen Exhaust - Power Plant	5 MW Natural Gas-Fired Reciprocating Engine outlet-- Exhaust	2587	15	dBA	5631	5	dBA	7840	1	dBA	8309	1	dBA
5 MW Gen Exhaust - Power Plant	5 MW Natural Gas-Fired Reciprocating Engine outlet-- Exhaust	2612	15	dBA	5657	5	dBA	7834	1	dBA	8287	1	dBA
5 MW Gen Exhaust - Power Plant	5 MW Natural Gas-Fired Reciprocating Engine outlet-- Exhaust	2618	15	dBA	5664	5	dBA	7832	1	dBA	8282	1	dBA
5 MW Gen Exhaust - Power Plant	5 MW Natural Gas-Fired Reciprocating Engine outlet-- Exhaust	2624	15	dBA	5669	5	dBA	7830	1	dBA	8277	1	dBA
5 MW Gen Exhaust - Power Plant	5 MW Natural Gas-Fired Reciprocating Engine outlet-- Exhaust	2629	15	dBA	5675	5	dBA	7829	1	dBA	8272	1	dBA
5 MW Gen Exhaust - Power Plant	5 MW Natural Gas-Fired Reciprocating Engine outlet-- Exhaust	2633	15	dBA	5679	5	dBA	7828	1	dBA	8269	1	dBA
5 MW Gen Exhaust - Power Plant	5 MW Natural Gas-Fired Reciprocating Engine outlet-- Exhaust	2593	15	dBA	5637	5	dBA	7838	1	dBA	8304	1	dBA
5 MW Gen Exhaust - Power Plant	5 MW Natural Gas-Fired Reciprocating Engine outlet-- Exhaust	2600	15	dBA	5644	5	dBA	7837	1	dBA	8298	1	dBA
5 MW Gen Exhaust - Power Plant	5 MW Natural Gas-Fired Reciprocating Engine outlet-- Exhaust	2606	15	dBA	5651	5	dBA	7835	1	dBA	8293	1	dBA
100 kW DieselGen exhaust - TMF Dam	DieselGen_100kW_Ex--Diesel GenSet Exhaust	4564	-7	dBA	3666	-3	dBA	5464	-10	dBA	11359	-22	dBA
VentilationFan_LP_RAR1	VF_LP_RAR1--LP Return Air Raise	4919	12	dBA	6511	7	dBA	5860	9	dBA	8748	1	dBA
VentilationFan_LP_RAR1	VF_LP_RAR1--LP Return Air Raise	4919	12	dBA	6511	7	dBA	5860	9	dBA	8749	1	dBA
DieselGenSet_50 kW casing - Chakuni I	DieselGen_50kW_Case--Diesel GenSet Casing	8721	-8	dBA	12993	-13	dBA	12491	-13	dBA	1734	13	dBA
DieselGenSet_50kW exhaust - Chakuni	DieselGen_50kW_Ex--Diesel GenSet Exhaust	8714	-20	dBA	12985	-26	dBA	12483	-26	dBA	1740	5	dBA
DieselGenset 200 kW casing - Chakuni	DieselGen_200kW_Case--Diesel GenSet Casing	9644	-7	dBA	14042	-13	dBA	13587	-12	dBA	1154	19	dBA
DieselGenSet_200 kW exhaust - Chaku	DieselGen_200kW_Ex--Diesel GenSet Exhaust	9634	-17	dBA	14030	-23	dBA	13575	-22	dBA	1156	14	dBA
UGR15 NPAG Stockpile to SouthDam	Haul Truck--CAT 777F	MS	39	dBA	MS	37	dBA	MS	35	dBA	MS	26	dBA
UGR3 AEXPortal to Crusher	Haul Truck--CAT 785	MS	25	dBA	MS	25	dBA	MS	27	dBA	MS	17	dBA
HVAC_admin_B_in	HVAC_inlet--	4365	-6	dBA	4953	-8	dBA	5573	-10	dBA	10025	-20	dBA
HVAC_admin_B_in	HVAC_inlet--	4221	-5	dBA	4865	-9	dBA	5706	-10	dBA	9999	-20	dBA
HVAC_admin_B_in	HVAC_inlet--	4375	-6	dBA	5032	-8	dBA	5583	-10	dBA	9953	-20	dBA
HVAC_admin_out	HVAC_outlet--	4364	-8	dBA	4949	-10	dBA	5572	-12	dBA	10029	-23	dBA
HVAC_admin_out	HVAC_outlet--	4221	-7	dBA	4861	-11	dBA	5706	-12	dBA	10003	-23	dBA
HVAC_coreS_out	HVAC_outlet--	4377	-8	dBA	5033	-10	dBA	5581	-12	dBA	9954	-23	dBA
HVAC_cs_in	HVAC_inlet--	4322	-6	dBA	4788	-7	dBA	5583	-10	dBA	10155	-21	dBA
HVAC_cs_out	HVAC_outlet--	4322	-8	dBA	4784	-9	dBA	5583	-12	dBA	10159	-24	dBA
HVAC_CAMP_in	HVAC_inlet--	2026	5	dBA	5608	-10	dBA	8410	-17	dBA	8243	-16	dBA
HVAC_CAMP_in	HVAC_inlet--	2006	6	dBA	5601	-10	dBA	8424	-17	dBA	8250	-16	dBA
HVAC_CAMP_in	HVAC_inlet--	1987	6	dBA	5594	-10	dBA	8438	-17	dBA	8256	-16	dBA

Notes on Table:
1. dBA = 1-hour energy equivalent sound (Leq (1-hr))
2. Height above local grade 3. MS = Mobile Source

Table A-3a: Underground Production Phase - Point of Reception Noise Impact

Daytime - LAeq,1hr

Project: Great Bear Project
Location: Red Lake, ON

Source ID	Source Description	Residence/Cabin/Lodge/Camp POR1 POR1 POR1 Point of Reception ID: POR1 Point of Reception Description: Residence/Cabin/Lodge/Camp Point of reception coordinates: X 456965, Y 5639223, Z [2] 372			Residence/Cabin/Lodge/Camp POR4 POR4 POR4 Point of Reception ID: POR4 Point of Reception Description: Residence/Cabin/Lodge/Camp Point of reception coordinates: X 451915, Y 5639044, Z [2] 357			Residence/Cabin/Lodge/Camp POR5 POR5 POR5 Point of Reception ID: POR5 Point of Reception Description: Residence/Cabin/Lodge/Camp Point of reception coordinates: X 451671, Y 5630891, Z [2] 354			Residence/Cabin/Lodge/Camp POR6 POR6 POR6 Point of Reception ID: POR6 Point of Reception Description: Residence/Cabin/Lodge/Camp Point of reception coordinates: X 465139, Y 5634939, Z [2] 350		
		Point of Reception 1			Point of Reception 4			Point of Reception 5			Point of Reception 6		
		Distance [3] (m)	Sound Level at PoR	Units [1] (dBA)	Distance [3] (m)	Sound Level at PoR	Units [1] (dBA)	Distance [3] (m)	Sound Level at PoR	Units [1] (dBA)	Distance [3] (m)	Sound Level at PoR	Units [1] (dBA)
HVAC_CAMP_in	HVAC_inlet--	1969	6	dBA	5588	-10	dBA	8451	-17	dBA	8262	-16	dBA
HVAC_CAMP_in	HVAC_inlet--	1951	6	dBA	5582	-10	dBA	8465	-17	dBA	8267	-16	dBA
HVAC_CAMP_in	HVAC_inlet--	1932	6	dBA	5576	-10	dBA	8479	-17	dBA	8272	-16	dBA
HVAC_CAMP_in	HVAC_inlet--	1915	6	dBA	5570	-10	dBA	8492	-17	dBA	8277	-16	dBA
HVAC_CAMP_in	HVAC_inlet--	1868	6	dBA	5556	-10	dBA	8528	-17	dBA	8291	-16	dBA
HVAC_CAMP_in	HVAC_inlet--	1849	7	dBA	5550	-10	dBA	8543	-17	dBA	8297	-16	dBA
HVAC_CAMP_in	HVAC_inlet--	1857	7	dBA	5606	-10	dBA	8581	-17	dBA	8241	-16	dBA
HVAC_CAMP_in	HVAC_inlet--	1875	6	dBA	5611	-10	dBA	8567	-17	dBA	8236	-16	dBA
HVAC_CAMP_in	HVAC_inlet--	1925	6	dBA	5639	-10	dBA	8540	-17	dBA	8209	-16	dBA
HVAC_CAMP_in	HVAC_inlet--	1942	6	dBA	5644	-10	dBA	8527	-17	dBA	8203	-16	dBA
HVAC_CAMP_in	HVAC_inlet--	1962	6	dBA	5651	-10	dBA	8512	-17	dBA	8197	-16	dBA
HVAC_CAMP_in	HVAC_inlet--	1979	6	dBA	5656	-10	dBA	8499	-17	dBA	8192	-16	dBA
HVAC_CAMP_in	HVAC_inlet--	1998	6	dBA	5662	-10	dBA	8485	-17	dBA	8187	-16	dBA
HVAC_CAMP_in	HVAC_inlet--	2017	5	dBA	5669	-10	dBA	8471	-17	dBA	8181	-16	dBA
HVAC_CAMP_in	HVAC_inlet--	2035	5	dBA	5675	-10	dBA	8457	-17	dBA	8176	-16	dBA
HVAC_CAMP_in	HVAC_inlet--	4569	-8	dBA	5006	-8	dBA	5365	-9	dBA	10144	-20	dBA
HVAC_CAMP_out	HVAC_outlet--	2026	3	dBA	5615	-12	dBA	8415	-20	dBA	8236	-19	dBA
HVAC_CAMP_out	HVAC_outlet--	2007	3	dBA	5609	-12	dBA	8429	-20	dBA	8242	-19	dBA
HVAC_CAMP_out	HVAC_outlet--	1989	3	dBA	5603	-12	dBA	8443	-20	dBA	8247	-19	dBA
HVAC_CAMP_out	HVAC_outlet--	1970	3	dBA	5597	-12	dBA	8458	-20	dBA	8252	-19	dBA
HVAC_CAMP_out	HVAC_outlet--	1953	3	dBA	5592	-12	dBA	8471	-20	dBA	8257	-19	dBA
HVAC_CAMP_out	HVAC_outlet--	1935	4	dBA	5586	-12	dBA	8484	-20	dBA	8262	-19	dBA
HVAC_CAMP_out	HVAC_outlet--	1916	4	dBA	5580	-12	dBA	8499	-20	dBA	8268	-19	dBA
HVAC_CAMP_out	HVAC_outlet--	1870	4	dBA	5565	-12	dBA	8534	-20	dBA	8282	-19	dBA
HVAC_CAMP_out	HVAC_outlet--	1851	4	dBA	5559	-12	dBA	8549	-20	dBA	8288	-19	dBA
HVAC_CAMP_out	HVAC_outlet--	1858	4	dBA	5612	-12	dBA	8586	-20	dBA	8235	-19	dBA
HVAC_CAMP_out	HVAC_outlet--	1876	4	dBA	5617	-12	dBA	8572	-20	dBA	8230	-19	dBA
HVAC_CAMP_out	HVAC_outlet--	1925	4	dBA	5645	-12	dBA	8545	-20	dBA	8202	-19	dBA
HVAC_CAMP_out	HVAC_outlet--	1943	3	dBA	5650	-12	dBA	8531	-20	dBA	8197	-19	dBA
HVAC_CAMP_out	HVAC_outlet--	1963	3	dBA	5656	-12	dBA	8516	-20	dBA	8192	-19	dBA
HVAC_CAMP_out	HVAC_outlet--	1980	3	dBA	5662	-12	dBA	8504	-20	dBA	8186	-19	dBA
HVAC_CAMP_out	HVAC_outlet--	1998	3	dBA	5668	-12	dBA	8490	-20	dBA	8181	-19	dBA
HVAC_CAMP_out	HVAC_outlet--	2017	3	dBA	5675	-12	dBA	8476	-20	dBA	8175	-19	dBA
HVAC_CAMP_out	HVAC_outlet--	2036	3	dBA	5682	-12	dBA	8462	-20	dBA	8169	-19	dBA
HVAC_CAMP_out	HVAC_outlet--	4567	-10	dBA	5011	-11	dBA	5369	-11	dBA	10136	-23	dBA
HVAC_st_in	HVAC_inlet--	4249	-5	dBA	4812	-7	dBA	5665	-10	dBA	10074	-20	dBA
HVAC_st_out	HVAC_outlet--	4248	-7	dBA	4808	-9	dBA	5665	-12	dBA	10077	-23	dBA
HVAC_TireRS_in	HVAC_inlet--	4178	-5	dBA	4697	-7	dBA	5720	-10	dBA	10132	-20	dBA
HVAC_TireRS_out	HVAC_outlet--	4178	-7	dBA	4692	-9	dBA	5719	-12	dBA	10137	-23	dBA
HVAC_warmSB_in	HVAC_inlet--	4350	-6	dBA	4891	-8	dBA	5574	-10	dBA	10076	-20	dBA
HVAC_warmSB_in	HVAC_inlet--	4298	-5	dBA	4875	-10	dBA	5626	-10	dBA	10050	-20	dBA
HVAC_warmSB_out	HVAC_outlet--	4348	-8	dBA	4884	-10	dBA	5574	-12	dBA	10081	-23	dBA
HVAC_warmSB_out	HVAC_outlet--	4297	-8	dBA	4869	-14	dBA	5626	-12	dBA	10055	-23	dBA
UG_Truck_50t	UG Truck 50t	MS	-20	dBA	MS	-18	dBA	MS	-16	dBA	MS	-27	dBA
UG_BoomTruck	UG Boom Truck	MS	-21	dBA	MS	-23	dBA	MS	-20	dBA	MS	-32	dBA
UG_BusPersonnel	UG Bus passenger	MS	-28	dBA	MS	-29	dBA	MS	-25	dBA	MS	-37	dBA
UG_CRF_Truck	UG CRF Truck	MS	-18	dBA	MS	-17	dBA	MS	-15	dBA	MS	-26	dBA
UG_EmulsionDevCarrier	UG Emulsion Dev-carrier	MS	-16	dBA	MS	-19	dBA	MS	-16	dBA	MS	-27	dBA
UG_EmulsionProdCarrier	UG Emulsion Prod-carrier	MS	-30	dBA	MS	-32	dBA	MS	-29	dBA	MS	-41	dBA
UG_TractorForkBackhoe	UG Tractor with Fork and Backhoe	MS	-14	dBA	MS	-16	dBA	MS	-14	dBA	MS	-23	dBA
UG_FuelNLube	UG Boom Truck	MS	-37	dBA	MS	-39	dBA	MS	-36	dBA	MS	-48	dBA

Notes on Table:
1. dBA = 1-hour energy equivalent sound (Leq (1-hr))
2. Height above local grade 3. MS = Mobile Source

Table A-3a: Underground Production Phase - Point of Reception Noise Impact

Daytime - LAeq,1hr

Project: Great Bear Project
Location: Red Lake, ON

Source ID	Source Description	Residence/Cabin/Lodge/Camp POR1 POR1 POR1 Point of Reception ID POR1			Residence/Cabin/Lodge/Camp POR4 POR4 POR4 Point of Reception ID POR4			Residence/Cabin/Lodge/Camp POR5 POR5 POR5 Point of Reception ID POR5			Residence/Cabin/Lodge/Camp POR6 POR6 POR6 Point of Reception ID POR6		
		Point of Reception Description			Point of Reception Description			Point of Reception Description			Point of Reception Description		
		Residence/Cabin/Lodge/Camp			Residence/Cabin/Lodge/Camp			Residence/Cabin/Lodge/Camp			Residence/Cabin/Lodge/Camp		
		Point of reception coordinates			Point of reception coordinates			Point of reception coordinates			Point of reception coordinates		
		X	Y	Z [2]	X	Y	Z [2]	X	Y	Z [2]	X	Y	Z [2]
		456965	5639223	372	451915	5639044	357	451671	5630891	354	465139	5634939	350
		Point of Reception 1			Point of Reception 4			Point of Reception 5			Point of Reception 6		
		Distance [3] (m)	Sound Level at PoR	Units [1] (dBA)	Distance [3] (m)	Sound Level at PoR	Units [1] (dBA)	Distance [3] (m)	Sound Level at PoR	Units [1] (dBA)	Distance [3] (m)	Sound Level at PoR	Units [1] (dBA)
UG_Grader	UG Grader	MS	-23	dBA	MS	-25	dBA	MS	-20	dBA	MS	-32	dBA
UG_JeepPersonnel	UG Jeep personnel carrier	MS	-23	dBA	MS	-26	dBA	MS	-23	dBA	MS	-35	dBA
UG_JeepVehicle	UG Jeep maintenance vehicle	MS	-34	dBA	MS	-37	dBA	MS	-34	dBA	MS	-45	dBA
UG_MobileCrane	UG Terrain mobile crane	MS	-30	dBA	MS	-32	dBA	MS	-30	dBA	MS	-39	dBA
UG_RoughTerrainFork	UG Rough Terrain Forklift	MS	-17	dBA	MS	-20	dBA	MS	-17	dBA	MS	-25	dBA
UG_Scissor	UG Scissor lift	MS	-9	dBA	MS	-11	dBA	MS	-8	dBA	MS	-17	dBA
UG_Shotcrete	UG Shotcrete Sprayer	MS	-22	dBA	MS	-22	dBA	MS	-20	dBA	MS	-31	dBA
UG_TransMixer	UG Transmixer	MS	-23	dBA	MS	-22	dBA	MS	-21	dBA	MS	-31	dBA
UG_WaterSpryer	UG Water spryer w/carrier	MS	-21	dBA	MS	-23	dBA	MS	-21	dBA	MS	-29	dBA
CIPTailingsThickenerUnderflowPump	CIP Tailings Thickener Underflow Pump	4510	4	dBA	4937	3	dBA	5413	-7	dBA	10162	-12	dBA
CyaniteTankAgitator	Cyanide Destruction Tank 1 Agitator	4485	-2	dBA	4938	-3	dBA	5439	-23	dBA	10140	-28	dBA
CyaniteTankAgitator	Cyanide Destruction Tank 1 Agitator	4485	-2	dBA	4928	-3	dBA	5437	-24	dBA	10151	-24	dBA
Desulphulrization_Agitator	Desulphurization AGITATOR, 185kW--Outside building	4426	-3	dBA	4881	-3	dBA	5491	-5	dBA	10147	-19	dBA
Desulphulrization_Agitator	Desulphurization AGITATOR, 185kW--Outside building	4432	-2	dBA	4883	-3	dBA	5485	-5	dBA	10151	-19	dBA
Desulphulrization_Agitator	Desulphurization AGITATOR, 185kW--Outside building	4439	-2	dBA	4886	-3	dBA	5477	-5	dBA	10154	-18	dBA
DesuphurizationlBlower	Flotation generator Blower 1--Desulphurization Flotation Blower 1	4447	-17	dBA	4860	-18	dBA	5464	-19	dBA	10186	-29	dBA
DesulphurizationFlotationPump	Flotation generator Blower 1--Desulphurization Flotation Blower 1	4429	-18	dBA	4883	-18	dBA	5487	-19	dBA	10149	-29	dBA
Detox_blower	Detox Blower, 315kW--4000 cfm inside building	4490	-21	dBA	4998	-24	dBA	5449	-34	dBA	10083	-32	dBA
DustCollectorApronFeeder_pr	Feeder generator Collector--Apron Feeder Dust Collector	5030	-4	dBA	5229	-5	dBA	4917	-4	dBA	10343	-34	dBA
DustCollectorApronFeeder_pr	Feeder generator Collector--Apron Feeder Dust Collector	4623	-18	dBA	5075	-11	dBA	5324	-5	dBA	10120	-15	dBA
DustCollectorApronFeeder_pr	Feeder generator Collector--Apron Feeder Dust Collector	4704	-18	dBA	5066	-5	dBA	5233	-5	dBA	10201	-15	dBA
DustCollectorConeCrusher_pr	Dust Collector for Cone Crusher	5058	-23	dBA	5248	-5	dBA	4891	-4	dBA	10351	-15	dBA
DustCollectorJawCrusher_pr	Dust Collector for Jaw Crusher feeder	5040	-4	dBA	5260	-23	dBA	4914	-4	dBA	10320	-15	dBA
DustCollectorLimeSilo	Lime Silo Dust Collector	4517	-6	dBA	5032	-22	dBA	5428	-22	dBA	10072	-15	dBA
DustCollectorConveyourSF	Sacrificial Conveyor to Stockpile Feed Conveyor Dust Collector	4787	-4	dBA	5097	-4	dBA	5150	-5	dBA	10246	-15	dBA
FlotationTailingsThickerPump	Flotation Tailings Thickener Overflow Pump	4452	6	dBA	4892	6	dBA	5465	4	dBA	10158	-10	dBA
FlotationTailingsThickerPump	Flotation Tailings Thickener Feed Pump, 160kW--Outside building	4459	3	dBA	4893	3	dBA	5457	1	dBA	10164	-13	dBA
FurnaceDustCollector	FurnaceBag Dust Collector	4525	-17	dBA	4990	-18	dBA	5409	-24	dBA	10121	-29	dBA
LeachBlower_280kW	Leach Blower, 280kW--6000 cfm inside building	4481	-22	dBA	4987	-29	dBA	5456	-28	dBA	10087	-32	dBA
LeachTankAgitator_1	Leach Tank Agitator, 150kW--Outside building	4519	-9	dBA	4969	-16	dBA	5411	-23	dBA	10137	-17	dBA
LeachTankAgitator_2	Leach Tank Agitator, 150kW--Outside building	4510	-1	dBA	4982	-3	dBA	5423	-20	dBA	10117	-17	dBA
LeachTankAgitator_3	Leach Tank Agitator, 150kW--Outside building	4498	-1	dBA	4962	-3	dBA	5431	-16	dBA	10128	-17	dBA
LeachTankAgitator_4	Leach Tank Agitator, 150kW--Outside building	4490	-9	dBA	4975	-12	dBA	5443	-16	dBA	10107	-17	dBA
LeachTankAgitator_5	Leach Tank Agitator, 150kW--Outside building	4478	-1	dBA	4954	-3	dBA	5451	-12	dBA	10119	-17	dBA
LeachTankAgitator_6	Leach Tank Agitator, 150kW--Outside building	4470	-1	dBA	4967	-3	dBA	5463	-10	dBA	10098	-17	dBA
PreLeachThickenerPump	Horizontal centrifugal slurry--Pre-leach Thickener Underflow Pump	4515	7	dBA	5013	5	dBA	5425	-5	dBA	10090	-9	dBA
ProductionConveyor	Stockpile Conveyor--w=1.35m; l=183m; 28.1m rise	MS	11	dBA	MS	10	dBA	MS	10	dBA	MS	-1	dBA
ProductionConveyor	Stockpile Conveyor--w=1.35m; l=183m; 28.1m rise	MS	-2	dBA	MS	5	dBA	MS	5	dBA	MS	-5	dBA
ProductionConveyor	Stockpile Conveyor--w=1.35m; l=183m; 28.1m rise	MS	-2	dBA	MS	5	dBA	MS	5	dBA	MS	-6	dBA
ProcessWaterPump_250kW	Process Water Pump, 250kW--Inside building	4524	3	dBA	4998	-10	dBA	5412	-14	dBA	10112	-26	dBA
Tailings_to_PastePump	Tailings to Paste Plant Pump 1	4467	3	dBA	4891	3	dBA	5449	1	dBA	10172	-12	dBA
Tailings_to_PastePump	Tailings to Paste Plant Pump 1	4475	4	dBA	4894	3	dBA	5440	1	dBA	10176	-12	dBA
TailingsPump	Tailings Pump	4509	5	dBA	4922	3	dBA	5410	-18	dBA	10177	-31	dBA
ProcessPlant_F1	Proces Plant Input Facade 1--	MS	-12	dBA	MS	-13	dBA	MS	-12	dBA	MS	-6	dBA
ProcessPlant_F2	Proces Plant Input Facade 2--	MS	6	dBA	MS	3	dBA	MS	-9	dBA	MS	-4	dBA
ProcessPlant_F3	Proces Plant Input Facade 3--	MS	4	dBA	MS	3	dBA	MS	2	dBA	MS	-20	dBA
ProcessPlant_F4	Proces Plant Input Facade 4--	MS	-8	dBA	MS	-9	dBA	MS	6	dBA	MS	-16	dBA
ProcessPlant_top	Proces Plant Input Top--	4555	8	dBA	4986	8	dBA	5376	8	dBA	10152	0	dBA
ArticulatedTruckCAT740_01_tf	EJ Articulated Trucks--CAT 740	MS	11	dBA	MS	12	dBA	MS	5	dBA	MS	-5	dBA
Compactor_CAT64B_02_tf	Compactor--CAT CS64B	5754	-1	dBA	3039	15	dBA	5154	8	dBA	12997	-4	dBA
Compactor_CAT64B_03_tf	Compactor--CAT CS64B	4760	9	dBA	4228	13	dBA	5142	9	dBA	11052	-2	dBA

Notes on Table:
1. dBA = 1-hour energy equivalent sound (Leq (1-hr))
2. Height above local grade 3. MS = Mobile Source

Table A-3a: Underground Production Phase - Point of Reception Noise Impact

Daytime - LAeq,1hr

Project: Great Bear Project
Location: Red Lake, ON

Source ID	Source Description	Residence/Cabin/Lodge/Camp POR1 POR1 POR1 Point of Reception ID: POR1			Residence/Cabin/Lodge/Camp POR4 POR4 POR4 Point of Reception ID: POR4			Residence/Cabin/Lodge/Camp POR5 POR5 POR5 Point of Reception ID: POR5			Residence/Cabin/Lodge/Camp POR6 POR6 POR6 Point of Reception ID: POR6		
		Point of Reception 1			Point of Reception 4			Point of Reception 5			Point of Reception 6		
		Distance [3] (m)	Sound Level at PoR	Units [1] (dBA)	Distance [3] (m)	Sound Level at PoR	Units [1] (dBA)	Distance [3] (m)	Sound Level at PoR	Units [1] (dBA)	Distance [3] (m)	Sound Level at PoR	Units [1] (dBA)
Compactor_CAT64B_01_tf	Compactor--CAT CS64B	4882	8	dBA	1877	21	dBA	6423	5	dBA	12855	-4	dBA
Dozer_CAT_D6_01_tf	Dozer - D6--CAT D6	3409	16	dBA	3041	24	dBA	6761	15	dBA	11082	7	dBA
Dozer_CAT_D6_02_tf	Dozer - D6--CAT D6	3555	20	dBA	4013	19	dBA	6328	13	dBA	10353	6	dBA
Excavator_CAT_D6_01_tf	EX Dozer--CAT D6	5931	10	dBA	3609	18	dBA	4629	15	dBA	12773	1	dBA
Excavator_CAT_D6_02_tf	EX Dozer--CAT D6	3670	17	dBA	2359	23	dBA	6939	10	dBA	11714	2	dBA
Dozer_CAT_D8_tf	Dozer--CAT D8	4793	23	dBA	3741	26	dBA	5247	22	dBA	11496	11	dBA
DewateringPump_01_tf	Dewatering Pump--DeWPump	5104	-2	dBA	4293	2	dBA	4817	-1	dBA	11318	-19	dBA
DewateringPump_03_tf	Dewatering Pump--DeWPump	5457	-3	dBA	3906	0	dBA	4680	-1	dBA	12009	-20	dBA
DewateringPump_02_tf	Dewatering Pump--DeWPump	5702	-14	dBA	2810	8	dBA	5368	-3	dBA	13099	-22	dBA
Exca_CAT336_01_tf	Excavator--CAT 336	4158	10	dBA	3763	10	dBA	5793	6	dBA	10961	-3	dBA
Exca_CAT336_02_tf	Excavator--CAT 336	5721	-2	dBA	2963	14	dBA	5227	7	dBA	13015	-5	dBA
Exca_CAT336_03_tf	Excavator--CAT 336	4624	8	dBA	1846	19	dBA	6579	3	dBA	12655	-4	dBA
FlatBedBoomTruck_tf	Flat Bed or Boom Truck --	MS	-7	dBA	MS	-5	dBA	MS	-11	dBA	MS	-23	dBA
LightDutyPickUp_tf	Pick-up--F150	MS	-12	dBA	MS	4	dBA	MS	-15	dBA	MS	-27	dBA
Skidder_JD640_01_tf	Skidder--JD 640L	4923	13	dBA	3817	17	dBA	5114	14	dBA	11552	4	dBA
Skidder_JD640_02_tf	Skidder--JD 640L	4313	15	dBA	3786	16	dBA	5646	13	dBA	11059	4	dBA
TandemWaterTruck_2500_pr	Tadem Water Trucks-- 2500 gls	MS	3	dBA	MS	1	dBA	MS	1	dBA	MS	-14	dBA
TMF_DamDiesel_DieselGen_case	DieselGen_100kW_Case--Diesel GenSet Casing	4562	3	dBA	3666	5	dBA	5467	0	dBA	11357	-9	dBA
CFR_Plant	CFR Plant Area	4879	18	dBA	5990	16	dBA	5475	17	dBA	9350	10	dBA
CRF_conveyor	Stockpile Conveyor--w=1.35m; l=183m; 28.1m rise	MS	0	dBA	MS	-3	dBA	MS	-1	dBA	MS	-10	dBA
PastePlantDustCollector	Paste Plant Dust Collector	5274	-20	dBA	6663	-9	dBA	5545	-6	dBA	8925	-23	dBA
PastePlantFacade_Top	Paste Plant top--	5260	9	dBA	6686	6	dBA	5586	9	dBA	8879	3	dBA
PastePlant_F1	Paste Plant facade 1--	MS	6	dBA	MS	4	dBA	MS	6	dBA	MS	-10	dBA
PastePlant_F2	Paste Plant facade 2--	MS	-7	dBA	MS	-8	dBA	MS	7	dBA	MS	-9	dBA
PastePlant_F3	Paste Plant facade 3--	MS	-8	dBA	MS	-9	dBA	MS	-4	dBA	MS	0	dBA
PastePlant_F4	Paste Plant facade 4--	MS	8	dBA	MS	5	dBA	MS	-3	dBA	MS	2	dBA
SnapAirBlower_PastePlant	Paste Plant (Backfill) Outdoors--Snap Air Blower 1	5279	-47	dBA	6680	-45	dBA	5553	-33	dBA	8910	-50	dBA
TailingsStorageTankAgitator	Paste Plant (Backfill) Outdoors--Tailings Storage Tank Agitator	5302	-23	dBA	6730	-22	dBA	5575	-5	dBA	8869	-15	dBA
ThickenerRecirculatingPump	Paste Plant (Backfill) Outdoors--Thickener Recirculation Pump	5295	-24	dBA	6713	-23	dBA	5567	-7	dBA	8883	-29	dBA
ThickerUFPumpPastePlant	Paste Plant (Backfill) Outdoors--Thickener UF Pump	5287	-24	dBA	6696	-23	dBA	5560	-7	dBA	8897	-30	dBA
SubstationArea	Substation Area cumulative	2576	6	dBA	5669	-5	dBA	7882	-9	dBA	8265	-10	dBA
VentilationFan_LP_RAR2	VF_LP_RAR2--LP Return Air Raise	5743	7	dBA	8128	1	dBA	6790	4	dBA	7356	3	dBA
VentilationFan_LP_RAR2	VF_LP_RAR2--LP Return Air Raise	5742	7	dBA	8128	1	dBA	6790	4	dBA	7355	3	dBA
VentilationFan_VIG_FAR	VF_VIG_FAR--Viggo Fresh Air Raise	6055	2	dBA	8579	-5	dBA	7062	-1	dBA	7026	-1	dBA
VentilationFan_VIG_FAR	VF_VIG_FAR--Viggo Fresh Air Raise	6055	2	dBA	8579	-5	dBA	7062	-1	dBA	7026	-1	dBA
VentilationFan_VIG_RAR	VF_VIG_RAR--Viggo Return Air Raise	5915	-3	dBA	8474	-10	dBA	7096	-6	dBA	7011	-6	dBA
VentilationFan_VIG_RAR	VF_VIG_RAR--Viggo Return Air Raise	5915	-3	dBA	8474	-10	dBA	7096	-6	dBA	7011	-6	dBA
HVAC_Emul_in	HVAC_inlet--	5567	-10	dBA	8962	-18	dBA	8523	-17	dBA	5682	-10	dBA
HVAC_Emul_in	HVAC_inlet--	5570	-10	dBA	8965	-18	dBA	8523	-17	dBA	5681	-10	dBA
HVAC_Emul_in	HVAC_inlet--	5572	-10	dBA	8968	-18	dBA	8524	-17	dBA	5680	-10	dBA
HVAC_Emul_in	HVAC_inlet--	5575	-10	dBA	8970	-18	dBA	8524	-17	dBA	5678	-10	dBA
HVAC_Emul_out	HVAC_outlet--	5567	-12	dBA	8962	-21	dBA	8523	-20	dBA	5682	-12	dBA
HVAC_Emul_out	HVAC_outlet--	5570	-12	dBA	8965	-21	dBA	8523	-20	dBA	5681	-12	dBA
HVAC_Emul_out	HVAC_outlet--	5572	-12	dBA	8968	-21	dBA	8524	-20	dBA	5680	-12	dBA
HVAC_Emul_out	HVAC_outlet--	5575	-12	dBA	8970	-21	dBA	8524	-20	dBA	5678	-12	dBA
HVAC_Mag_S_in	HVAC_inlet--	4799	-8	dBA	7933	-16	dBA	7858	-15	dBA	6596	-13	dBA
HVAC_Mag_S_in	HVAC_inlet--	4802	-8	dBA	7936	-16	dBA	7859	-15	dBA	6594	-20	dBA
HVAC_Mag_S_in	HVAC_inlet--	4804	-8	dBA	7938	-16	dBA	7859	-15	dBA	6592	-12	dBA
HVAC_Mag_S_in	HVAC_inlet--	4807	-8	dBA	7941	-16	dBA	7860	-15	dBA	6591	-12	dBA
HVAC_Mag_S_out	HVAC_outlet--	4799	-11	dBA	7933	-18	dBA	7858	-18	dBA	6596	-15	dBA
HVAC_Mag_S_out	HVAC_outlet--	4802	-11	dBA	7936	-18	dBA	7858	-18	dBA	6594	-24	dBA

Notes on Table:
1. dBA = 1-hour energy equivalent sound (Leq (1-hr))
2. Height above local grade 3. MS = Mobile Source

Table A-3a: Underground Production Phase - Point of Reception Noise Impact

Daytime - LAeq,1hr

Project: Great Bear Project
Location: Red Lake, ON

	Residence/Cabin/Lodge/Camp	Residence/Cabin/Lodge/Camp	Residence/Cabin/Lodge/Camp	Residence/Cabin/Lodge/Camp
	POR1 POR1 POR1	POR4 POR4 POR4	POR5 POR5 POR5	POR6 POR6 POR6
Point of Reception ID	**POR1**	**POR4**	**POR5**	**POR6**
Point of Reception Description				
Residence/Cabin/Lodge/Camp				
Point of reception coordinates				
X	456965	451915	451671	465139
Y	5639223	5639044	5630891	5634939
Z [2]	372	357	354	350

Source ID	Source Description	Point of Reception 1			Point of Reception 4			Point of Reception 5			Point of Reception 6		
		Distance [3] (m)	Sound Level at PoR	Units [1] (dBA)	Distance [3] (m)	Sound Level at PoR	Units [1] (dBA)	Distance [3] (m)	Sound Level at PoR	Units [1] (dBA)	Distance [3] (m)	Sound Level at PoR	Units [1] (dBA)
HVAC_Mag_S_out	HVAC_outlet--	4804	-10	dBA	7938	-18	dBA	7859	-18	dBA	6593	-15	dBA
HVAC_Mag_S_out	HVAC_outlet--	4807	-10	dBA	7941	-18	dBA	7859	-18	dBA	6591	-15	dBA
Transformer_600kVA	600 kVA--Transformer	5577	-34	dBA	8976	-48	dBA	8532	-40	dBA	5671	-34	dBA
VentilationFan_Discovery_FAR	UG ventilation for Discovery Fresh Air Raise	4604	7	dBA	5435	6	dBA	5477	6	dBA	9723	-6	dBA
VentilationFan_Discovery_FAR	UG ventilation for Discovery Fresh Air Raise	4604	7	dBA	5435	6	dBA	5478	6	dBA	9723	-6	dBA
VentilationFan_Discovery_RAR	UG ventilation for Discovery Return Air Raise	4492	7	dBA	5191	5	dBA	5505	4	dBA	9886	-8	dBA
VentilationFan_Discovery_RAR	UG ventilation for Discovery Return Air Raise	4492	7	dBA	5191	5	dBA	5505	4	dBA	9886	-8	dBA
VentilationFan_HingeLimb_FAR2	UG ventilation for Hinge and Limb Fresh Air Raise 2	5631	23	dBA	7289	18	dBA	5760	23	dBA	8490	15	dBA
VentilationFan_HingeLimb_FAR2	UG ventilation for Hinge and Limb Fresh Air Raise 2	5631	23	dBA	7289	18	dBA	5761	23	dBA	8489	15	dBA
VentilationFan_HingeLimb_RAR	UG ventilation for Hinge and Limb Return Air Raise	5664	1	dBA	6955	-3	dBA	5321	2	dBA	8991	-8	dBA
VentilationFan_HingeLimb_RAR	UG ventilation for Hinge and Limb Return Air Raise	5664	1	dBA	6954	-3	dBA	5322	2	dBA	8991	-8	dBA
BusPersonnel_01_pp	Bus (60 seats)--BusPersonnel	MS	-10	dBA	MS	-19	dBA	MS	-23	dBA	MS	-25	dBA
BusPersonnel_02_pp	Bus (60 seats)--BusPersonnel	MS	-23	dBA	MS	-26	dBA	MS	-26	dBA	MS	-38	dBA
BusPersonnel_03_pp	Bus (60 seats)--BusPersonnel	MS	-21	dBA	MS	-28	dBA	MS	-30	dBA	MS	-31	dBA
BusPersonnel_04_pp	Bus (60 seats)--BusPersonnel	MS	-22	dBA	MS	-30	dBA	MS	-31	dBA	MS	-31	dBA
BusPersonnel_05_pp	Bus (60 seats)--BusPersonnel	MS	-19	dBA	MS	-14	dBA	MS	-15	dBA	MS	-33	dBA
ContainerTrailerTruck_pp	Container Trailer Truck--ContTT	MS	-7	dBA	MS	-17	dBA	MS	-21	dBA	MS	-28	dBA
Dozer_CAT_D10_02_pp	Dozer - D10--CAT D10	3221	24	dBA	6130	16	dBA	7573	13	dBA	7971	12	dBA
Dozer_CAT_D10_pp	Dozer - D10--CAT D10	4152	21	dBA	5766	16	dBA	6192	16	dBA	8976	10	dBA
Dozer_CAT_D6_01_pp	Dozer - D6--CAT D6	4049	18	dBA	7214	10	dBA	7820	9	dBA	7048	11	dBA
Dozer_CAT_D6_02_pp	Dozer - D6--CAT D6	4223	17	dBA	7191	10	dBA	7556	10	dBA	7205	10	dBA
Dozer_CAT_D6_03_pp	Dozer - D6--CAT D6	3433	20	dBA	5204	15	dBA	6673	12	dBA	9122	7	dBA
Dozer_CAT_D8_pit	Dozer--CAT D8	3650	26	dBA	5792	20	dBA	6791	18	dBA	8598	15	dBA
DewateringPump_01_pp	Dewatering Pump--DeWPump	4777	-1	dBA	6294	-6	dBA	5843	-5	dBA	8883	-14	dBA
DewateringPump_02_pp	Dewatering Pump--DeWPump	5720	-14	dBA	7869	-11	dBA	6427	-7	dBA	7738	-11	dBA
DewateringPump_03_pp	Dewatering Pump--DeWPump	4693	-1	dBA	6309	-6	dBA	5961	-5	dBA	8785	-14	dBA
DewateringPump_04_pp	Dewatering Pump--DeWPump	5059	-2	dBA	8027	-11	dBA	7631	-10	dBA	6708	-8	dBA
DewateringPump_05_pp	Dewatering Pump--DeWPump	5690	-15	dBA	7798	-11	dBA	6365	-6	dBA	7811	-11	dBA
DewateringPump_06_pp	Dewatering Pump--DeWPump	5964	-14	dBA	8766	-14	dBA	7530	-10	dBA	6568	-8	dBA
DewateringPump_07_pp	Dewatering Pump--DeWPump	5378	-3	dBA	7356	-10	dBA	6201	-6	dBA	8092	-12	dBA
DewateringPump_08_pp	Dewatering Pump--DeWPump	4676	-5	dBA	6843	-8	dBA	6524	-7	dBA	8075	-12	dBA
DewateringPump_09_pp	Dewatering Pump--DeWPump	5938	-5	dBA	8389	-12	dBA	6920	-8	dBA	7186	-9	dBA
DewateringPump_10_pp	Dewatering Pump--DeWPump	6054	-6	dBA	8901	-14	dBA	7635	-10	dBA	6452	-9	dBA
DiePump_01_pp	Diesel Pump--HL250M	4921	-20	dBA	7254	-28	dBA	6697	-26	dBA	7742	-29	dBA
DiePump_02_pp	Diesel Pump--HL250M	4705	-20	dBA	6624	-26	dBA	6249	-24	dBA	8394	-31	dBA
DiePump_03_pp	Diesel Pump--HL250M	6305	-25	dBA	9056	-32	dBA	7526	-28	dBA	6541	-25	dBA
DiePump_04_pp	Diesel Pump--HL250M	5575	-22	dBA	7958	-29	dBA	6771	-26	dBA	7416	-28	dBA
DiePump_05_pp	Diesel Pump--HL250M	6163	-24	dBA	8762	-31	dBA	7216	-27	dBA	6860	-26	dBA
Excavator_CAT374_01_pp	Excavator--CAT 374	4637	5	dBA	6583	0	dBA	6294	1	dBA	8384	-3	dBA
Excavator_CAT374_02_pp	Excavator--CAT 374	5666	2	dBA	7819	-3	dBA	6431	0	dBA	7748	-3	dBA
Excavator_CAT374_03_pp	Excavator--CAT 374	4072	7	dBA	5646	3	dBA	6206	2	dBA	9052	-3	dBA
CrushFeeder_CAT777_idling	Haul Truck--CAT 777F	5053	3	dBA	5258	5	dBA	4899	19	dBA	10336	8	dBA
FrontLoaderSmallerCAT966_01_pp	Front End Loader (smaller)--CAT 966	4209	16	dBA	5877	12	dBA	6203	11	dBA	8891	7	dBA
FrontLoaderSmallerCAT966_02_pp	Front End Loader (smaller)--CAT 966	4264	16	dBA	7318	9	dBA	7677	9	dBA	7057	10	dBA
FlatDeckTruck_pp	Flat Deck Truck--FlatDT	MS	2	dBA	MS	-8	dBA	MS	-12	dBA	MS	-19	dBA
FrontLoaderCAT993_02_pp	Front End Loader--CAT993	3655	22	dBA	5797	16	dBA	6789	14	dBA	8594	11	dBA
FrontLoaderCAT993_03_pp	Front End Loader--CAT993	4097	20	dBA	7286	13	dBA	7858	12	dBA	6980	13	dBA
Fork_CATDP4055_01_pp	Forklift--Cat DP40-55(C)N3, 5.5t	4321	1	dBA	4939	-5	dBA	5617	-5	dBA	10003	-9	dBA
Fork_CATDP4055_02_pp	Forklift--Cat DP40-55(C)N3, 5.5t	4232	1	dBA	4786	0	dBA	5677	-2	dBA	10087	-23	dBA
Fork_CATDP4055_03_pp	Forklift--Cat DP40-55(C)N3, 5.5t	4479	0	dBA	4941	-1	dBA	5446	-14	dBA	10132	-21	dBA
Fork_CATDP4055_04_pp	Forklift--Cat DP40-55(C)N3, 5.5t	4187	0	dBA	4755	-4	dBA	5719	-3	dBA	10083	-10	dBA

Notes on Table:
1. dBA = 1-hour energy equivalent sound (Leq (1-hr))
2. Height above local grade 3. MS = Mobile Source

Table A-3a: Underground Production Phase - Point of Reception Noise Impact

Daytime - LAeq,1hr

Project: Great Bear Project
Location: Red Lake, ON

Source ID	Source Description	Residence/Cabin/Lodge/Camp POR1 POR1 POR1 Point of Reception ID: POR1			Residence/Cabin/Lodge/Camp POR4 POR4 POR4 Point of Reception ID: POR4			Residence/Cabin/Lodge/Camp POR5 POR5 POR5 Point of Reception ID: POR5			Residence/Cabin/Lodge/Camp POR6 POR6 POR6 Point of Reception ID: POR6		
		Point of Reception 1			Point of Reception 4			Point of Reception 5			Point of Reception 6		
		Distance [3] (m)	Sound Level at PoR	Units [1] (dBA)	Distance [3] (m)	Sound Level at PoR	Units [1] (dBA)	Distance [3] (m)	Sound Level at PoR	Units [1] (dBA)	Distance [3] (m)	Sound Level at PoR	Units [1] (dBA)
Fork_CATDP4055_05_pp	Forklift--Cat DP40-55(C)N3, 5.5t	4479	0	dBA	4941	-1	dBA	5446	-14	dBA	10132	-21	dBA
FuelTankerTruck_CAT740_01_pp	Fuel Tanker Truck (30,000 L)--CAT 740	MS	-5	dBA	MS	2	dBA	MS	-14	dBA	MS	-21	dBA
FuelTankerTruck_02_pp	Fuel Tanker Truck (30,000 L)--CAT 740	MS	-17	dBA	MS	-19	dBA	MS	-19	dBA	MS	-29	dBA
FusionMachine_01_pp	Fusion Machine--Ritmo Delta 250	4894	-25	dBA	5589	-16	dBA	5214	-15	dBA	9823	-30	dBA
FusionMachine_02_pp	Fusion Machine--Ritmo Delta 250	4452	-13	dBA	7395	-23	dBA	7530	-24	dBA	7097	-22	dBA
FusionMachine_03_pp	Fusion Machine--Ritmo Delta 250	4800	-13	dBA	5444	-20	dBA	5256	-15	dBA	9892	-33	dBA
HighCubeTruck_pp	High Cube Truck--Ford F-650 SD DIESEL	MS	-7	dBA	MS	-17	dBA	MS	-21	dBA	MS	-28	dBA
IntegratedToolCarrier_pp	Integrated Tool Carrier--WA200-7	3024	10	dBA	5432	3	dBA	7236	0	dBA	8676	-3	dBA
LowboyNTractor_75t_pp	Lowboy and Tractor--75ton - 100ton	MS	-5	dBA	MS	-15	dBA	MS	-20	dBA	MS	-26	dBA
MechanicsTruck_01_pp	Mechanics Truck--Mtruck	MS	-15	dBA	MS	-19	dBA	MS	-19	dBA	MS	-28	dBA
MechanicsTruck_02_pp	Mechanics Truck--Mtruck	MS	-16	dBA	MS	-21	dBA	MS	-22	dBA	MS	-30	dBA
MechanicsTruck_03_pp	Mechanics Truck--Mtruck	MS	-17	dBA	MS	-24	dBA	MS	-26	dBA	MS	-28	dBA
MechanicsTruck_04_pp	Mechanics Truck--Mtruck	MS	-19	dBA	MS	-27	dBA	MS	-27	dBA	MS	-28	dBA
MechanicsTruck_05_pp	Mechanics Truck--Mtruck	MS	-15	dBA	MS	-9	dBA	MS	-20	dBA	MS	-31	dBA
MobileCrane150t_pp	150t Mobile Crane--MobCrane150t	4489	2	dBA	5002	-8	dBA	5451	-17	dBA	10079	-15	dBA
MobileCrane50t_01_pp	50t Mobile Crane--Tadano GR-500XL	4492	11	dBA	4925	10	dBA	5429	-10	dBA	10160	-5	dBA
PortableWaterTruck_pp	Portable Water Truck--PoWT	MS	-3	dBA	MS	-12	dBA	MS	-14	dBA	MS	-21	dBA
PickUp_F150_01_pp	Pick-up--F150	MS	0	dBA	MS	-9	dBA	MS	-11	dBA	MS	-19	dBA
PickUp_F150_02_pp	Pick-up--F150	MS	0	dBA	MS	8	dBA	MS	-5	dBA	MS	-19	dBA
PickUpTruck_F150_03_pp	Pick-up--F150	MS	-3	dBA	MS	-11	dBA	MS	-12	dBA	MS	-20	dBA
RoadGrader_CAT16_01_pp	Road Grader--CAT 16	MS	15	dBA	MS	2	dBA	MS	-1	dBA	MS	-3	dBA
RoadGrader_CAT16_02_pp	Road Grader--CAT 16	MS	6	dBA	MS	12	dBA	MS	7	dBA	MS	-6	dBA
RoadGrader_CAT16_03_pp	Road Grader--CAT 16	MS	4	dBA	MS	15	dBA	MS	-1	dBA	MS	-11	dBA
SewageCollectionTruck_pp	Sewage Collection Truck--SewColTruck	MS	-3	dBA	MS	-16	dBA	MS	-20	dBA	MS	-25	dBA
DieselGenSet_200kW_Shaft	DieselGen_200kW_Case--Diesel GenSet Casing	4980	2	dBA	6400	-1	dBA	5677	1	dBA	8952	-6	dBA
DieselGenset 200kw_Shaft_ex	DieselGen_200kW_Ex--Diesel GenSet Exhaust	4980	-6	dBA	6400	-10	dBA	5678	-8	dBA	8951	-16	dBA
Shovel_10m3_pp	Shovel 10.0 m3--CAT 6015	4358	18	dBA	5470	15	dBA	5778	14	dBA	9474	7	dBA
SkidSteer_CAT650_01_pp	Skid Steer--Bobcat S650	4305	3	dBA	4737	2	dBA	5593	0	dBA	10191	-12	dBA
SkidSteer_CAT650_02_pp	Skid Steer--Bobcat S650	4467	1	dBA	4950	0	dBA	5462	-15	dBA	10113	-8	dBA
SnowWaterTruck_01_pp	Snow Plow/Water Truck--T880	MS	-2	dBA	MS	-10	dBA	MS	-11	dBA	MS	-18	dBA
SnowWaterTruck_02_pp	Snow Plow/Water Truck--T880	MS	-9	dBA	MS	-15	dBA	MS	-15	dBA	MS	-17	dBA
TLB_CAT422_01_pp	TLB--Cat 422F2	5085	-14	dBA	5276	-1	dBA	4869	-1	dBA	10348	-10	dBA
TLB_CAT422_02_pp	TLB--Cat 422F2	4792	-1	dBA	5126	-1	dBA	5152	-1	dBA	10221	-10	dBA
WaterTruck_CAT740_01_pp	Water Truck (30,000 L)--CAT 740	MS	-12	dBA	MS	-16	dBA	MS	-15	dBA	MS	-19	dBA
WaterTruck_02_pp	Water Truck (30,000 L)--CAT 740	MS	-10	dBA	MS	-15	dBA	MS	-15	dBA	MS	-18	dBA
BackHow_PC1250_q	Quarry Source - Production Backhoe--PC1250 (6.7m3)	5287	8	dBA	2232	18	dBA	5976	6	dBA	13031	-6	dBA
BackHoe_330_bp	Backhoe--330	4733	4	dBA	911	23	dBA	7378	-2	dBA	13221	-10	dBA
BlastTruck_F350_q	Blasters Truck--F350	MS	-12	dBA	MS	-11	dBA	MS	-12	dBA	MS	-21	dBA
Dozer_CAT_D6_bp	Dozer - D6--CAT D6	4469	16	dBA	1675	27	dBA	6822	10	dBA	12633	1	dBA
Dozer_CAT_D8_q	Dozer--CAT D8	6101	16	dBA	3042	24	dBA	5117	18	dBA	13401	4	dBA
DewateringPump_01_q	Dewatering Pump--DeWPump	6048	-4	dBA	2916	9	dBA	5243	-2	dBA	13426	-21	dBA
DewateringPump_02_q	Dewatering Pump--DeWPump	6242	-5	dBA	3203	7	dBA	4958	-1	dBA	13456	-21	dBA
DewateringPump_01_bp	Dewatering Pump--DeWPump	4501	-6	dBA	1706	17	dBA	6773	-7	dBA	12639	-20	dBA
DewateringPump_02_bp	Dewatering Pump--DeWPump	6016	-4	dBA	3555	5	dBA	4649	1	dBA	12915	-20	dBA
Loader_L1350_q	Quarry Source - Production Loader--L-1350 (23m3)	5317	20	dBA	2524	29	dBA	5713	19	dBA	12879	6	dBA
Loader_CAT966_bp	Borrow Source - Loader (FEL)--CAT 966	MS	-11	dBA	MS	2	dBA	MS	-17	dBA	MS	-28	dBA
PrimaryDrill_D65_01_q	Primary Drill--140mm SmartRoc D65	6025	22	dBA	2986	30	dBA	5172	24	dBA	13349	11	dBA
PrimaryDrill_D65_02_q	Primary Drill--140mm SmartRoc D65	6192	21	dBA	3125	30	dBA	5035	24	dBA	13451	11	dBA
PickUp_F150_q	Pick-up--F150	MS	-6	dBA	MS	-11	dBA	MS	-12	dBA	MS	-26	dBA
RockCrusher_UD211_01_q	Rock Crusher--Sandvik UD211	6220	22	dBA	3069	30	dBA	5097	25	dBA	13526	12	dBA
ScreeningPlant_bp	Borrow Source - Screening Plant--	4642	17	dBA	1665	30	dBA	6724	14	dBA	12770	6	dBA

Notes on Table:
1. dBA = 1-hour energy equivalent sound (Leq (1-hr))
2. Height above local grade 3. MS = Mobile Source

Table A-3a: Underground Production Phase - Point of Reception Noise Impact

Daytime - LAeq,1hr

Project: Great Bear Project
Location: Red Lake, ON

Source ID	Source Description	Residence/Cabin/Lodge/Camp POR1 POR1 POR1 Point of Reception ID: POR1 Point of Reception Description: Residence/Cabin/Lodge/Camp Point of reception coordinates: X 456965, Y 5639223, Z [2] 372			Residence/Cabin/Lodge/Camp POR4 POR4 POR4 Point of Reception ID: POR4 Point of Reception Description: Residence/Cabin/Lodge/Camp Point of reception coordinates: X 451915, Y 5639044, Z [2] 357			Residence/Cabin/Lodge/Camp POR5 POR5 POR5 Point of Reception ID: POR5 Point of Reception Description: Residence/Cabin/Lodge/Camp Point of reception coordinates: X 451671, Y 5630891, Z [2] 354			Residence/Cabin/Lodge/Camp POR6 POR6 POR6 Point of Reception ID: POR6 Point of Reception Description: Residence/Cabin/Lodge/Camp Point of reception coordinates: X 465139, Y 5634939, Z [2] 350		
		Point of Reception 1			Point of Reception 4			Point of Reception 5			Point of Reception 6		
		Distance [3] (m)	Sound Level at PoR	Units [1] (dBA)	Distance [3] (m)	Sound Level at PoR	Units [1] (dBA)	Distance [3] (m)	Sound Level at PoR	Units [1] (dBA)	Distance [3] (m)	Sound Level at PoR	Units [1] (dBA)
UGR22 TMF Facility to WestDam	Articulating Truck--40t	MS	3	dBA	MS	9	dBA	MS	7	dBA	MS	-9	dBA
UGR20_40t_TMFFacility_to_NorthDam	Articulating Truck--40t	MS	2	dBA	MS	10	dBA	MS	-3	dBA	MS	-13	dBA
UGR21 TMF Facility to SouthDam	Articulating Truck--40t	MS	3	dBA	MS	6	dBA	MS	-1	dBA	MS	-13	dBA
UGR7 NorthDam to Overburden#4	Articulating Truck--40t	MS	-12	dBA	MS	0	dBA	MS	-17	dBA	MS	-28	dBA
UGR8 SouthDam to Overburden#3	Articulating Truck--40t	MS	-1	dBA	MS	1	dBA	MS	-6	dBA	MS	-17	dBA
UGR9_Art40t_WestDam_to_OVB5	Articulating Truck--40t	MS	-15	dBA	MS	-5	dBA	MS	-12	dBA	MS	-27	dBA
UGR10_777_TMFFacility_to_NorthDam	Haul Truck--CAT 777F	MS	19	dBA	MS	26	dBA	MS	15	dBA	MS	6	dBA
UGR11 BorrowSource#3 to NorthDam	Haul Truck--CAT 777F	MS	12	dBA	MS	26	dBA	MS	8	dBA	MS	-2	dBA
UGR12 NPAG Stockpile to NorthDam	Haul Truck--CAT 777F	MS	32	dBA	MS	35	dBA	MS	28	dBA	MS	20	dBA
UGR13 TMF Facility to SouthDam	Haul Truck--CAT 777F	MS	20	dBA	MS	22	dBA	MS	16	dBA	MS	6	dBA
UGR14 BorrowSource#3 to SouthDam	Haul Truck--CAT 777F	MS	19	dBA	MS	29	dBA	MS	14	dBA	MS	4	dBA
UGR16 TMF Facility to WestDam	Haul Truck--CAT 777F	MS	20	dBA	MS	25	dBA	MS	23	dBA	MS	9	dBA
UGR17 BorrowSource#3 to WestDam	Haul Truck--CAT 777F	MS	15	dBA	MS	28	dBA	MS	12	dBA	MS	1	dBA
UGR18 NPAG Stockpile to WestDam	Haul Truck--CAT 777F	MS	30	dBA	MS	31	dBA	MS	30	dBA	MS	19	dBA
UGR19 NPAGStockpile to RoadBase	Haul Truck--CAT 777F	MS	26	dBA	MS	21	dBA	MS	18	dBA	MS	12	dBA
UGR23 AEXPortal to PAG Stockpile	Haul Truck--CAT 777F	MS	35	dBA	MS	28	dBA	MS	27	dBA	MS	26	dBA
UGR1 LGO Stockpile west to Crusher	Haul Truck--CAT 785	MS	23	dBA	MS	20	dBA	MS	21	dBA	MS	13	dBA
UGR2 LGO Stockpile big to Crusher	Haul Truck--CAT 785	MS	21	dBA	MS	19	dBA	MS	20	dBA	MS	12	dBA
UGR4 Shaft to Crusher	Haul Truck--CAT 785	MS	10	dBA	MS	8	dBA	MS	9	dBA	MS	0	dBA
UGR5 AEXPortal to PAG Stockpile	Haul Truck--CAT 785	MS	13	dBA	MS	7	dBA	MS	7	dBA	MS	3	dBA
UGR6 AEXPortal to NPAG Stockpile	Haul Truck--CAT 785	MS	22	dBA	MS	17	dBA	MS	16	dBA	MS	10	dBA
HVAC_Admin_in	HVAC_inlet--	5009	-8	dBA	5503	-10	dBA	5039	-8	dBA	10030	-20	dBA
HVAC_Admin_out	HVAC_outlet--	5009	-10	dBA	5506	-12	dBA	5040	-10	dBA	10027	-23	dBA
HVAC_CAMP_A_in	HVAC_inlet--	5065	-8	dBA	5502	-10	dBA	4973	-8	dBA	10087	-20	dBA
HVAC_CAMP_A_out	HVAC_outlet--	5068	-10	dBA	5503	-12	dBA	4971	-10	dBA	10089	-23	dBA
HVAC_CAMP_B_in	HVAC_inlet--	5067	-8	dBA	5519	-10	dBA	4978	-8	dBA	10071	-20	dBA
HVAC_CAMP_B_out	HVAC_outlet--	5069	-10	dBA	5520	-12	dBA	4976	-10	dBA	10071	-23	dBA
HVAC_CAMP_C_in	HVAC_inlet--	5067	-8	dBA	5533	-10	dBA	4984	-8	dBA	10055	-20	dBA
HVAC_CAMP_C_out	HVAC_outlet--	5070	-10	dBA	5535	-12	dBA	4982	-10	dBA	10056	-23	dBA
HVAC_Kitchen_in	HVAC_inlet--	5046	-8	dBA	5541	-10	dBA	5013	-8	dBA	10026	-20	dBA
HVAC_Kitchen_out	HVAC_outlet--	5046	-10	dBA	5544	-12	dBA	5014	-10	dBA	10023	-23	dBA
HVAC_Storage_in	HVAC_inlet--	4924	-8	dBA	5499	-10	dBA	5136	-8	dBA	9951	-20	dBA
HVAC_Storage_out	HVAC_outlet--	4924	-10	dBA	5502	-12	dBA	5138	-11	dBA	9948	-23	dBA
HVAC_TreatPlant_in	HVAC_inlet--	4996	-8	dBA	5620	-10	dBA	5108	-8	dBA	9890	-20	dBA
HVAC_TREATPlant_out	HVAC_outlet--	4997	-10	dBA	5623	-12	dBA	5109	-10	dBA	9886	-23	dBA
HVAC_Truck_S_in	HVAC_inlet--	4930	-8	dBA	5568	-10	dBA	5161	-8	dBA	9881	-19	dBA
VentilationFan_AEX	VentFan_aex--UG AEX Portal Ventilation Fan	4937	18	dBA	5785	22	dBA	5270	24	dBA	9644	12	dBA
TMF_DamDieselGen_100kW_ex	DieselGen_100kW_Ex--Diesel GenSet Exhaust	4482	-9	dBA	4176	-5	dBA	5410	-11	dBA	10858	-22	dBA
ExploMag_DieselGen_100kW_case	DieselGen_100kW_Case--Diesel GenSet Casing	4785	1	dBA	7922	-4	dBA	7861	-4	dBA	6600	-2	dBA
ExploMagazineDieselGenSet_100kW_ex	DieselGen_100kW_Ex--Diesel GenSet Exhaust	4784	-9	dBA	7923	-16	dBA	7865	-16	dBA	6597	-13	dBA
ExploStor_DieselGen_100kW_case	DieselGen_100kW_Case--Diesel GenSet Casing	5575	0	dBA	8978	-6	dBA	8540	-5	dBA	5664	0	dBA
ExploStorageDieselGenSet_100kW_ex	DieselGen_100kW_Ex--Diesel GenSet Exhaust	5576	-10	dBA	8980	-18	dBA	8543	-17	dBA	5661	-10	dBA
TMF_dam_DieselGen_100kW_case	DieselGen_100kW_Case--Diesel GenSet Casing	4478	1	dBA	4188	3	dBA	5412	0	dBA	10844	-8	dBA
Wat_dixie_DieselGen_100kW_case	DieselGen_100kW_Case--Diesel GenSet Casing	5699	-9	dBA	7831	-5	dBA	6401	-2	dBA	7771	-5	dBA
DixieDewateringDieselGen_100kW_ex	DieselGen_100kW_Ex--Diesel GenSet Exhaust	5697	-21	dBA	7826	-17	dBA	6396	-13	dBA	7776	-17	dBA

Notes on Table:
1. dBA = 1-hour energy equivalent sound (Leq (1-hr))
2. Height above local grade 3. MS = Mobile Source

Table A-3b: Underground Production - Point of Reception Noise Impact

Evening/Nighttime - LAeq,1hr

Project: Great Bear Project
Location: Red Lake, ON

Source ID	Source Description	Residence/Cabin/Lodge/Camp POR1 POR1 POR1 **Point of Reception ID POR1**			Residence/Cabin/Lodge/Camp POR4 POR4 POR4 **Point of Reception ID POR4**			Residence/Cabin/Lodge/Camp POR5 POR5 POR5 **Point of Reception ID POR5**			Residence/Cabin/Lodge/Camp POR6 POR6 POR6 **Point of Reception ID POR6**		
		Point of Reception Description			**Point of Reception Description**			**Point of Reception Description**			**Point of Reception Description**		
		Residence/Cabin/Lodge/Camp			**Residence/Cabin/Lodge/Camp**			**Residence/Cabin/Lodge/Camp**			**Residence/Cabin/Lodge/Camp**		
		Point of reception coordinates			**Point of reception coordinates**			**Point of reception coordinates**			**Point of reception coordinates**		
		X	**Y**	**Z [2]**	**X**	**Y**	**Z [2]**	**X**	**Y**	**Z [2]**	**X**	**Y**	**Z [2]**
		456965	5639223	372	451915	5639044	357	451671	5630891	354	465139	5634939	350
		Point of Reception 1			**Point of Reception 4**			**Point of Reception 5**			**Point of Reception 6**		
		Distance [3] (m)	**Sound Level at PoR**	**Units [1] (dBA)**	**Distance [3] (m)**	**Sound Level at PoR**	**Units [1] (dBA)**	**Distance [3] (m)**	**Sound Level at PoR**	**Units [1] (dBA)**	**Distance [3] (m)**	**Sound Level at PoR**	**Units [1] (dBA)**
TransferTowerPebbleCrusher_F1	Transfer Tower Pebble Crusher facade 1	MS	10	dBA	MS	10	dBA	MS	24	dBA	MS	2	dBA
TransferTowerPebbleCrusher_F2	Transfer Tower Pebble Crusher facade 2	MS	9	dBA	MS	9	dBA	MS	23	dBA	MS	15	dBA
TransferTowerPebbleCrusher_F3	Transfer Tower Pebble Crusher facade 3	MS	22	dBA	MS	24	dBA	MS	12	dBA	MS	16	dBA
TransferTowerPebbleCrusher_F4	Transfer Tower Pebble Crusher facade 4	MS	21	dBA	MS	23	dBA	MS	16	dBA	MS	1	dBA
TransferTowerPebbleCrusher_Top	Transfer Tower Pebble Crusher Top	4687	23	dBA	5060	18	dBA	5250	23	dBA	10193	15	dBA
PrimaryCrusher_F1	Primary Crusher facade 1--	MS	28	dBA	MS	12	dBA	MS	13	dBA	MS	19	dBA
PrimaryCrusher_F2	Primary Crusher facade 2--	MS	25	dBA	MS	24	dBA	MS	10	dBA	MS	16	dBA
PrimaryCrusher_F3	Primary Crusher facade 3--	MS	12	dBA	MS	27	dBA	MS	28	dBA	MS	4	dBA
PrimaryCrusher_F4	Primary Crusher facade 4--	MS	5	dBA	MS	6	dBA	MS	22	dBA	MS	-2	dBA
Primary_F4_binOP	PriCru_fac_4_binOp--	MS	7	dBA	MS	8	dBA	MS	21	dBA	MS	0	dBA
Primary Crusher_Top	Primary Crusher Top--	5035	25	dBA	5243	23	dBA	4915	25	dBA	10334	16	dBA
5 MW NaturalGasPower Casing - Powe	5 MW Natural Gas-Fired Reciprocating Engine Casing	2589	21	dBA	5629	9	dBA	7837	5	dBA	8311	3	dBA
5 MW NaturalGasPower Casing - Powe	5 MW Natural Gas-Fired Reciprocating Engine Casing	2613	21	dBA	5656	9	dBA	7832	5	dBA	8289	3	dBA
5 MW NaturalGasPower Casing - Powe	5 MW Natural Gas-Fired Reciprocating Engine Casing	2619	20	dBA	5662	9	dBA	7830	5	dBA	8283	3	dBA
5 MW NaturalGasPower Casing - Powe	5 MW Natural Gas-Fired Reciprocating Engine Casing	2625	20	dBA	5668	9	dBA	7828	5	dBA	8279	4	dBA
5 MW NaturalGasPower Casing - Powe	5 MW Natural Gas-Fired Reciprocating Engine Casing	2630	20	dBA	5673	9	dBA	7827	5	dBA	8274	4	dBA
5 MW NaturalGasPower Casing - Powe	5 MW Natural Gas-Fired Reciprocating Engine Casing	2634	20	dBA	5678	9	dBA	7826	5	dBA	8271	4	dBA
5 MW NaturalGasPower Casing - Powe	5 MW Natural Gas-Fired Reciprocating Engine Casing	2594	20	dBA	5636	9	dBA	7836	4	dBA	8306	3	dBA
5 MW NaturalGasPower Casing - Powe	5 MW Natural Gas-Fired Reciprocating Engine Casing	2601	21	dBA	5642	9	dBA	7834	4	dBA	8300	3	dBA
5 MW NaturalGasPower Casing - Powe	5 MW Natural Gas-Fired Reciprocating Engine Casing	2607	21	dBA	5649	9	dBA	7833	5	dBA	8294	3	dBA
5 MW Gen Exhaust - Power Plant	5 MW Natural Gas-Fired Reciprocating Engine outlet-- Exhaust	2587	15	dBA	5631	5	dBA	7840	1	dBA	8309	1	dBA
5 MW Gen Exhaust - Power Plant	5 MW Natural Gas-Fired Reciprocating Engine outlet-- Exhaust	2612	15	dBA	5657	5	dBA	7834	1	dBA	8287	1	dBA
5 MW Gen Exhaust - Power Plant	5 MW Natural Gas-Fired Reciprocating Engine outlet-- Exhaust	2618	15	dBA	5664	5	dBA	7832	1	dBA	8282	1	dBA
5 MW Gen Exhaust - Power Plant	5 MW Natural Gas-Fired Reciprocating Engine outlet-- Exhaust	2624	15	dBA	5669	5	dBA	7830	1	dBA	8277	1	dBA
5 MW Gen Exhaust - Power Plant	5 MW Natural Gas-Fired Reciprocating Engine outlet-- Exhaust	2629	15	dBA	5675	5	dBA	7829	1	dBA	8272	1	dBA
5 MW Gen Exhaust - Power Plant	5 MW Natural Gas-Fired Reciprocating Engine outlet-- Exhaust	2633	15	dBA	5679	5	dBA	7828	1	dBA	8269	1	dBA
5 MW Gen Exhaust - Power Plant	5 MW Natural Gas-Fired Reciprocating Engine outlet-- Exhaust	2593	15	dBA	5637	5	dBA	7838	1	dBA	8304	1	dBA
5 MW Gen Exhaust - Power Plant	5 MW Natural Gas-Fired Reciprocating Engine outlet-- Exhaust	2600	15	dBA	5644	5	dBA	7837	1	dBA	8298	1	dBA
5 MW Gen Exhaust - Power Plant	5 MW Natural Gas-Fired Reciprocating Engine outlet-- Exhaust	2606	15	dBA	5651	5	dBA	7835	1	dBA	8293	1	dBA
100 kW DieselGen exhaust - TMF Dam	DieselGen_100kW_Ex--Diesel GenSet Exhaust	4564	-7	dBA	3666	-3	dBA	5464	-10	dBA	11359	-22	dBA
VentilationFan_LP_RAR1	VF_LP_RAR1--LP Return Air Raise	4919	12	dBA	6511	7	dBA	5860	9	dBA	8748	1	dBA
VentilationFan_LP_RAR1	VF_LP_RAR1--LP Return Air Raise	4919	12	dBA	6511	7	dBA	5860	9	dBA	8749	1	dBA
DieselGenSet_50 kW casing - Chakuni I	DieselGen_50kW_Case--Diesel GenSet Casing	8721	-8	dBA	12993	-13	dBA	12491	-13	dBA	1734	13	dBA
DieselGenSet_50kW exhaust - Chakuni	DieselGen_50kW_Ex--Diesel GenSet Exhaust	8714	-20	dBA	12985	-26	dBA	12483	-26	dBA	1740	5	dBA
DieselGenset 200 kW casing - Chakuni	DieselGen_200kW_Case--Diesel GenSet Casing	9644	-7	dBA	14042	-13	dBA	13587	-12	dBA	1154	19	dBA
DieselGenSet_200 kW exhaust - Chaku	DieselGen_200kW_Ex--Diesel GenSet Exhaust	9634	-17	dBA	14030	-23	dBA	13575	-22	dBA	1156	14	dBA
UGR15 NPAG Stockpile to SouthDam	Haul Truck--CAT 777F	MS	0	dBA	MS	0	dBA	MS	0	dBA	MS	0	dBA
UGR3 AEXPortal to Crusher	Haul Truck--CAT 785	MS	25	dBA	MS	25	dBA	MS	27	dBA	MS	17	dBA
HVAC_admin_B_in	HVAC_inlet--	4365	-6	dBA	4953	-8	dBA	5573	-10	dBA	10025	-20	dBA
HVAC_admin_B_in	HVAC_inlet--	4221	-5	dBA	4865	-9	dBA	5706	-10	dBA	9999	-20	dBA
HVAC_admin_B_in	HVAC_inlet--	4375	-6	dBA	5032	-8	dBA	5583	-10	dBA	9953	-20	dBA
HVAC_admin_out	HVAC_outlet--	4364	-8	dBA	4949	-10	dBA	5572	-12	dBA	10029	-23	dBA
HVAC_admin_out	HVAC_outlet--	4221	-7	dBA	4861	-11	dBA	5706	-12	dBA	10003	-23	dBA
HVAC_coreS_out	HVAC_outlet--	4377	-8	dBA	5033	-10	dBA	5581	-12	dBA	9954	-23	dBA
HVAC_cs_in	HVAC_inlet--	4322	-6	dBA	4788	-7	dBA	5583	-10	dBA	10155	-21	dBA
HVAC_cs_out	HVAC_outlet--	4322	-8	dBA	4784	-9	dBA	5583	-12	dBA	10159	-24	dBA
HVAC_CAMP_in	HVAC_inlet--	2026	5	dBA	5608	-10	dBA	8410	-17	dBA	8243	-16	dBA
HVAC_CAMP_in	HVAC_inlet--	2006	6	dBA	5601	-10	dBA	8424	-17	dBA	8250	-16	dBA
HVAC_CAMP_in	HVAC_inlet--	1987	6	dBA	5594	-10	dBA	8438	-17	dBA	8256	-16	dBA

Notes on Table:
1. dBA = 1-hour energy equivalent sound (Leq (1-hr))
2. Height above local grade 3. MS = Mobile Source

Table A-3b: Underground Production - Point of Reception Noise Impact

Evening/Nighttime - LAeq,1hr

Project: Great Bear Project
Location: Red Lake, ON

Source ID	Source Description	Residence/Cabin/Lodge/Camp POR1 POR1 POR1 Point of Reception ID POR1			Residence/Cabin/Lodge/Camp POR4 POR4 POR4 Point of Reception ID POR4			Residence/Cabin/Lodge/Camp POR5 POR5 POR5 Point of Reception ID POR5			Residence/Cabin/Lodge/Camp POR6 POR6 POR6 Point of Reception ID POR6		
		Point of Reception Description			Point of Reception Description			Point of Reception Description			Point of Reception Description		
		Residence/Cabin/Lodge/Camp			Residence/Cabin/Lodge/Camp			Residence/Cabin/Lodge/Camp			Residence/Cabin/Lodge/Camp		
		Point of reception coordinates			Point of reception coordinates			Point of reception coordinates			Point of reception coordinates		
		X	Y	Z [2]	X	Y	Z [2]	X	Y	Z [2]	X	Y	Z [2]
		456965	5639223	372	451915	5639044	357	451671	5630891	354	465139	5634939	350
		Point of Reception 1			Point of Reception 4			Point of Reception 5			Point of Reception 6		
		Distance [3] (m)	Sound Level at PoR	Units [1] (dBA)	Distance [3] (m)	Sound Level at PoR	Units [1] (dBA)	Distance [3] (m)	Sound Level at PoR	Units [1] (dBA)	Distance [3] (m)	Sound Level at PoR	Units [1] (dBA)
HVAC_CAMP_in	HVAC_inlet--	1969	6	dBA	5588	-10	dBA	8451	-17	dBA	8262	-16	dBA
HVAC_CAMP_in	HVAC_inlet--	1951	6	dBA	5582	-10	dBA	8465	-17	dBA	8267	-16	dBA
HVAC_CAMP_in	HVAC_inlet--	1932	6	dBA	5576	-10	dBA	8479	-17	dBA	8272	-16	dBA
HVAC_CAMP_in	HVAC_inlet--	1915	6	dBA	5570	-10	dBA	8492	-17	dBA	8277	-16	dBA
HVAC_CAMP_in	HVAC_inlet--	1868	6	dBA	5556	-10	dBA	8528	-17	dBA	8291	-16	dBA
HVAC_CAMP_in	HVAC_inlet--	1849	7	dBA	5550	-10	dBA	8543	-17	dBA	8297	-16	dBA
HVAC_CAMP_in	HVAC_inlet--	1857	7	dBA	5606	-10	dBA	8581	-17	dBA	8241	-16	dBA
HVAC_CAMP_in	HVAC_inlet--	1875	6	dBA	5611	-10	dBA	8567	-17	dBA	8236	-16	dBA
HVAC_CAMP_in	HVAC_inlet--	1925	6	dBA	5639	-10	dBA	8540	-17	dBA	8209	-16	dBA
HVAC_CAMP_in	HVAC_inlet--	1942	6	dBA	5644	-10	dBA	8527	-17	dBA	8203	-16	dBA
HVAC_CAMP_in	HVAC_inlet--	1962	6	dBA	5651	-10	dBA	8512	-17	dBA	8197	-16	dBA
HVAC_CAMP_in	HVAC_inlet--	1979	6	dBA	5656	-10	dBA	8499	-17	dBA	8192	-16	dBA
HVAC_CAMP_in	HVAC_inlet--	1998	6	dBA	5662	-10	dBA	8485	-17	dBA	8187	-16	dBA
HVAC_CAMP_in	HVAC_inlet--	2017	5	dBA	5669	-10	dBA	8471	-17	dBA	8181	-16	dBA
HVAC_CAMP_in	HVAC_inlet--	2035	5	dBA	5675	-10	dBA	8457	-17	dBA	8176	-16	dBA
HVAC_CAMP_in	HVAC_inlet--	4569	-8	dBA	5006	-8	dBA	5365	-9	dBA	10144	-20	dBA
HVAC_CAMP_out	HVAC_outlet--	2026	3	dBA	5615	-12	dBA	8415	-20	dBA	8236	-19	dBA
HVAC_CAMP_out	HVAC_outlet--	2007	3	dBA	5609	-12	dBA	8429	-20	dBA	8242	-19	dBA
HVAC_CAMP_out	HVAC_outlet--	1989	3	dBA	5603	-12	dBA	8443	-20	dBA	8247	-19	dBA
HVAC_CAMP_out	HVAC_outlet--	1970	3	dBA	5597	-12	dBA	8458	-20	dBA	8252	-19	dBA
HVAC_CAMP_out	HVAC_outlet--	1953	3	dBA	5592	-12	dBA	8471	-20	dBA	8257	-19	dBA
HVAC_CAMP_out	HVAC_outlet--	1935	4	dBA	5586	-12	dBA	8484	-20	dBA	8262	-19	dBA
HVAC_CAMP_out	HVAC_outlet--	1916	4	dBA	5580	-12	dBA	8499	-20	dBA	8268	-19	dBA
HVAC_CAMP_out	HVAC_outlet--	1870	4	dBA	5565	-12	dBA	8534	-20	dBA	8282	-19	dBA
HVAC_CAMP_out	HVAC_outlet--	1851	4	dBA	5559	-12	dBA	8549	-20	dBA	8288	-19	dBA
HVAC_CAMP_out	HVAC_outlet--	1858	4	dBA	5612	-12	dBA	8586	-20	dBA	8235	-19	dBA
HVAC_CAMP_out	HVAC_outlet--	1876	4	dBA	5617	-12	dBA	8572	-20	dBA	8230	-19	dBA
HVAC_CAMP_out	HVAC_outlet--	1925	4	dBA	5645	-12	dBA	8545	-20	dBA	8202	-19	dBA
HVAC_CAMP_out	HVAC_outlet--	1943	3	dBA	5650	-12	dBA	8531	-20	dBA	8197	-19	dBA
HVAC_CAMP_out	HVAC_outlet--	1963	3	dBA	5656	-12	dBA	8516	-20	dBA	8192	-19	dBA
HVAC_CAMP_out	HVAC_outlet--	1980	3	dBA	5662	-12	dBA	8504	-20	dBA	8186	-19	dBA
HVAC_CAMP_out	HVAC_outlet--	1998	3	dBA	5668	-12	dBA	8490	-20	dBA	8181	-19	dBA
HVAC_CAMP_out	HVAC_outlet--	2017	3	dBA	5675	-12	dBA	8476	-20	dBA	8175	-19	dBA
HVAC_CAMP_out	HVAC_outlet--	2036	3	dBA	5682	-12	dBA	8462	-20	dBA	8169	-19	dBA
HVAC_CAMP_out	HVAC_outlet--	4567	-10	dBA	5011	-11	dBA	5369	-11	dBA	10136	-23	dBA
HVAC_st_in	HVAC_inlet--	4249	-5	dBA	4812	-7	dBA	5665	-10	dBA	10074	-20	dBA
HVAC_st_out	HVAC_outlet--	4248	-7	dBA	4808	-9	dBA	5665	-12	dBA	10077	-23	dBA
HVAC_TireRS_in	HVAC_inlet--	4178	-5	dBA	4697	-7	dBA	5720	-10	dBA	10132	-20	dBA
HVAC_TireRS_out	HVAC_outlet--	4178	-7	dBA	4692	-9	dBA	5719	-12	dBA	10137	-23	dBA
HVAC_warmSB_in	HVAC_inlet--	4350	-6	dBA	4891	-8	dBA	5574	-10	dBA	10076	-20	dBA
HVAC_warmSB_in	HVAC_inlet--	4298	-5	dBA	4875	-10	dBA	5626	-10	dBA	10050	-20	dBA
HVAC_warmSB_out	HVAC_outlet--	4348	-8	dBA	4884	-10	dBA	5574	-12	dBA	10081	-23	dBA
HVAC_warmSB_out	HVAC_outlet--	4297	-8	dBA	4869	-14	dBA	5626	-12	dBA	10055	-23	dBA
UG_Truck_50t	UG Truck 50t	MS	-20	dBA	MS	-18	dBA	MS	-16	dBA	MS	-27	dBA
UG_BoomTruck	UG Boom Truck	MS	-21	dBA	MS	-23	dBA	MS	-20	dBA	MS	-32	dBA
UG_BusPersonnel	UG Bus passenger	MS	-28	dBA	MS	-29	dBA	MS	-25	dBA	MS	-37	dBA
UG_CRF_Truck	UG CRF Truck	MS	-18	dBA	MS	-17	dBA	MS	-15	dBA	MS	-26	dBA
UG_EmulsionDevCarrier	UG Emulsion Dev-carrier	MS	-16	dBA	MS	-19	dBA	MS	-16	dBA	MS	-27	dBA
UG_EmulsionProdCarrier	UG Emulsion Prod-carrier	MS	-30	dBA	MS	-32	dBA	MS	-29	dBA	MS	-41	dBA
UG_TractorForkBackhoe	UG Tractor with Fork and Backhoe	MS	-14	dBA	MS	-16	dBA	MS	-14	dBA	MS	-23	dBA
UG_FuelNLube	UG Boom Truck	MS	-37	dBA	MS	-39	dBA	MS	-36	dBA	MS	-48	dBA

Notes on Table:
1. dBA = 1-hour energy equivalent sound (Leq (1-hr))
2. Height above local grade 3. MS = Mobile Source

Table A-3b: Underground Production - Point of Reception Noise Impact

Evening/Nighttime - LAeq,1hr

Project: Great Bear Project
Location: Red Lake, ON

Source ID	Source Description	Residence/Cabin/Lodge/Camp POR1 POR1 POR1 Point of Reception ID POR1			Residence/Cabin/Lodge/Camp POR4 POR4 POR4 Point of Reception ID POR4			Residence/Cabin/Lodge/Camp POR5 POR5 POR5 Point of Reception ID POR5			Residence/Cabin/Lodge/Camp POR6 POR6 POR6 Point of Reception ID POR6		
		Point of Reception Description			Point of Reception Description			Point of Reception Description			Point of Reception Description		
		Residence/Cabin/Lodge/Camp			Residence/Cabin/Lodge/Camp			Residence/Cabin/Lodge/Camp			Residence/Cabin/Lodge/Camp		
		Point of reception coordinates			Point of reception coordinates			Point of reception coordinates			Point of reception coordinates		
		X	Y	Z [2]	X	Y	Z [2]	X	Y	Z [2]	X	Y	Z [2]
		456965	5639223	372	451915	5639044	357	451671	5630891	354	465139	5634939	350
		Point of Reception 1			Point of Reception 4			Point of Reception 5			Point of Reception 6		
		Distance [3] (m)	Sound Level at PoR	Units [1] (dBA)	Distance [3] (m)	Sound Level at PoR	Units [1] (dBA)	Distance [3] (m)	Sound Level at PoR	Units [1] (dBA)	Distance [3] (m)	Sound Level at PoR	Units [1] (dBA)
UG_Grader	UG Grader	MS	-23	dBA	MS	-25	dBA	MS	-20	dBA	MS	-32	dBA
UG_JeepPersonnel	UG Jeep personnel carrier	MS	-23	dBA	MS	-26	dBA	MS	-23	dBA	MS	-35	dBA
UG_JeepVehicle	UG Jeep maintenance vehicle	MS	-34	dBA	MS	-37	dBA	MS	-34	dBA	MS	-45	dBA
UG_MobileCrane	UG Terrain mobile crane	MS	-30	dBA	MS	-32	dBA	MS	-30	dBA	MS	-39	dBA
UG_RoughTerrainFork	UG Rough Terrain Forklift	MS	-17	dBA	MS	-20	dBA	MS	-17	dBA	MS	-25	dBA
UG_Scissor	UG Scissor lift	MS	-9	dBA	MS	-11	dBA	MS	-8	dBA	MS	-17	dBA
UG_Shotcrete	UG Shotcrete Sprayer	MS	-22	dBA	MS	-22	dBA	MS	-20	dBA	MS	-31	dBA
UG_TransMixer	UG Transmixer	MS	-23	dBA	MS	-22	dBA	MS	-21	dBA	MS	-31	dBA
UG_WaterSpryer	UG Water spryer w/carrier	MS	-21	dBA	MS	-23	dBA	MS	-21	dBA	MS	-29	dBA
CIPTailingsThickenerUnderflowPump	CIP Tailings Thickener Underflow Pump	4510	4	dBA	4937	3	dBA	5413	-7	dBA	10162	-12	dBA
CyaniteTankAgitator	Cyanide Destruction Tank 1 Agitator	4485	-2	dBA	4938	-3	dBA	5439	-23	dBA	10140	-28	dBA
CyaniteTankAgitator	Cyanide Destruction Tank 1 Agitator	4485	-2	dBA	4928	-3	dBA	5437	-24	dBA	10151	-24	dBA
Desulphulrization_Agitator	Desulphurization AGITATOR, 185kW--Outside building	4426	-3	dBA	4881	-3	dBA	5491	-5	dBA	10147	-19	dBA
Desulphulrization_Agitator	Desulphurization AGITATOR, 185kW--Outside building	4432	-2	dBA	4883	-3	dBA	5485	-5	dBA	10151	-19	dBA
Desulphulrization_Agitator	Desulphurization AGITATOR, 185kW--Outside building	4439	-2	dBA	4886	-3	dBA	5477	-5	dBA	10154	-18	dBA
DesuphurizationlBlower	Flotation generator Blower 1--Desulphurization Flotation Blower 1	4447	-17	dBA	4860	-18	dBA	5464	-19	dBA	10186	-29	dBA
DesulphurizationFlotationPump	Flotation generator Blower 1--Desulphurization Flotation Blower 1	4429	-18	dBA	4883	-18	dBA	5487	-19	dBA	10149	-29	dBA
Detox_blower	Detox Blower, 315kW--4000 cfm inside building	4490	-21	dBA	4998	-24	dBA	5449	-34	dBA	10083	-32	dBA
DustCollectorApronFeeder_pr	Feeder generator Collector--Apron Feeder Dust Collector	5030	-4	dBA	5229	-5	dBA	4917	-4	dBA	10343	-34	dBA
DustCollectorApronFeeder_pr	Feeder generator Collector--Apron Feeder Dust Collector	4623	-18	dBA	5075	-11	dBA	5324	-5	dBA	10120	-15	dBA
DustCollectorApronFeeder_pr	Feeder generator Collector--Apron Feeder Dust Collector	4704	-18	dBA	5066	-5	dBA	5233	-5	dBA	10201	-15	dBA
DustCollectorConeCrusher_pr	Dust Collector for Cone Crusher	5058	-23	dBA	5248	-5	dBA	4891	-4	dBA	10351	-15	dBA
DustCollectorJawCrusher_pr	Dust Collector for Jaw Crusher feeder	5040	-4	dBA	5260	-23	dBA	4914	-4	dBA	10320	-15	dBA
DustCollectorLimeSilo	Lime Silo Dust Collector	4517	-6	dBA	5032	-22	dBA	5428	-22	dBA	10072	-15	dBA
DustCollectorConveyourSF	Sacrificial Conveyor to Stockpile Feed Conveyor Dust Collector	4787	-4	dBA	5097	-4	dBA	5150	-5	dBA	10246	-15	dBA
FlotationTailingsThickerPump	Flotation Tailings Thickener Overflow Pump	4452	6	dBA	4892	6	dBA	5465	4	dBA	10158	-10	dBA
FlotationTailingsThickerPump	Flotation Tailings Thickener Feed Pump, 160kW--Outside building	4459	3	dBA	4893	3	dBA	5457	1	dBA	10164	-13	dBA
FurnaceDustCollector	FurnaceBag Dust Collector	4525	-17	dBA	4990	-18	dBA	5409	-24	dBA	10121	-29	dBA
LeachBlower_280kW	Leach Blower, 280kW--6000 cfm inside building	4481	-22	dBA	4987	-29	dBA	5456	-28	dBA	10087	-32	dBA
LeachTankAgitator_1	Leach Tank Agitator, 150kW--Outside building	4519	-9	dBA	4969	-16	dBA	5411	-23	dBA	10137	-17	dBA
LeachTankAgitator_2	Leach Tank Agitator, 150kW--Outside building	4510	-1	dBA	4982	-3	dBA	5423	-20	dBA	10117	-17	dBA
LeachTankAgitator_3	Leach Tank Agitator, 150kW--Outside building	4498	-1	dBA	4962	-3	dBA	5431	-16	dBA	10128	-17	dBA
LeachTankAgitator_4	Leach Tank Agitator, 150kW--Outside building	4490	-9	dBA	4975	-12	dBA	5443	-16	dBA	10107	-17	dBA
LeachTankAgitator_5	Leach Tank Agitator, 150kW--Outside building	4478	-1	dBA	4954	-3	dBA	5451	-12	dBA	10119	-17	dBA
LeachTankAgitator_6	Leach Tank Agitator, 150kW--Outside building	4470	-1	dBA	4967	-3	dBA	5463	-10	dBA	10098	-17	dBA
PreLeachThickenerPump	Horizontal centrifugal slurry--Pre-leach Thickener Underflow Pump	4515	7	dBA	5013	5	dBA	5425	-5	dBA	10090	-9	dBA
ProductionConveyor	Stockpile Conveyor--w=1.35m; l=183m; 28.1m rise	MS	11	dBA	MS	10	dBA	MS	10	dBA	MS	-1	dBA
ProductionConveyor	Stockpile Conveyor--w=1.35m; l=183m; 28.1m rise	MS	-2	dBA	MS	5	dBA	MS	5	dBA	MS	-5	dBA
ProductionConveyor	Stockpile Conveyor--w=1.35m; l=183m; 28.1m rise	MS	-2	dBA	MS	5	dBA	MS	5	dBA	MS	-6	dBA
ProcessWaterPump_250kW	Process Water Pump, 250kW--Inside building	4524	3	dBA	4998	-10	dBA	5412	-14	dBA	10112	-26	dBA
Tailings_to_PastePump	Tailings to Paste Plant Pump 1	4467	3	dBA	4891	3	dBA	5449	1	dBA	10172	-12	dBA
Tailings_to_PastePump	Tailings to Paste Plant Pump 1	4475	4	dBA	4894	3	dBA	5440	1	dBA	10176	-12	dBA
TailingsPump	Tailings Pump	4509	5	dBA	4922	3	dBA	5410	-18	dBA	10177	-31	dBA
ProcessPlant_F1	Proces Plant Input Facade 1--	MS	-12	dBA	MS	-13	dBA	MS	-12	dBA	MS	-6	dBA
ProcessPlant_F2	Proces Plant Input Facade 2--	MS	6	dBA	MS	3	dBA	MS	-9	dBA	MS	-4	dBA
ProcessPlant_F3	Proces Plant Input Facade 3--	MS	4	dBA	MS	3	dBA	MS	2	dBA	MS	-20	dBA
ProcessPlant_F4	Proces Plant Input Facade 4--	MS	-8	dBA	MS	-9	dBA	MS	6	dBA	MS	-16	dBA
ProcessPlant_top	Proces Plant Input Top--	4555	8	dBA	4986	8	dBA	5376	8	dBA	10152	0	dBA
ArticulatedTruckCAT740_01_tf	EJ Articulated Trucks--CAT 740	MS	0	dBA	MS	0	dBA	MS	0	dBA	MS	0	dBA
Compactor_CAT64B_02_tf	Compactor--CAT CS64B	5754	0	dBA	3039	0	dBA	5154	0	dBA	12997	0	dBA
Compactor_CAT64B_03_tf	Compactor--CAT CS64B	4760	0	dBA	4228	0	dBA	5142	0	dBA	11052	0	dBA

Notes on Table:
1. dBA = 1-hour energy equivalent sound (Leq (1-hr))
2. Height above local grade 3. MS = Mobile Source

Table A-3b: Underground Production - Point of Reception Noise Impact

Evening/Nighttime - LAeq,1hr

Project: Great Bear Project
Location: Red Lake, ON

Source ID	Source Description	Residence/Cabin/Lodge/Camp POR1 POR1 POR1 **Point of Reception ID POR1**			Residence/Cabin/Lodge/Camp POR4 POR4 POR4 **Point of Reception ID POR4**			Residence/Cabin/Lodge/Camp POR5 POR5 POR5 **Point of Reception ID POR5**			Residence/Cabin/Lodge/Camp POR6 POR6 POR6 **Point of Reception ID POR6**		
		Point of Reception Description			**Point of Reception Description**			**Point of Reception Description**			**Point of Reception Description**		
		Residence/Cabin/Lodge/Camp			**Residence/Cabin/Lodge/Camp**			**Residence/Cabin/Lodge/Camp**			**Residence/Cabin/Lodge/Camp**		
		Point of reception coordinates			**Point of reception coordinates**			**Point of reception coordinates**			**Point of reception coordinates**		
		X	**Y**	**Z [2]**	**X**	**Y**	**Z [2]**	**X**	**Y**	**Z [2]**	**X**	**Y**	**Z [2]**
		456965	5639223	372	451915	5639044	357	451671	5630891	354	465139	5634939	350
		Point of Reception 1			**Point of Reception 4**			**Point of Reception 5**			**Point of Reception 6**		
		Distance [3] (m)	**Sound Level at PoR**	**Units [1] (dBA)**	**Distance [3] (m)**	**Sound Level at PoR**	**Units [1] (dBA)**	**Distance [3] (m)**	**Sound Level at PoR**	**Units [1] (dBA)**	**Distance [3] (m)**	**Sound Level at PoR**	**Units [1] (dBA)**
Compactor_CAT64B_01_tf	Compactor--CAT CS64B	4882	0	dBA	1877	0	dBA	6423	0	dBA	12855	0	dBA
Dozer_CAT_D6_01_tf	Dozer - D6--CAT D6	3409	0	dBA	3041	0	dBA	6761	0	dBA	11082	0	dBA
Dozer_CAT_D6_02_tf	Dozer - D6--CAT D6	3555	0	dBA	4013	0	dBA	6328	0	dBA	10353	0	dBA
Excavator_CAT_D6_01_tf	EX Dozer--CAT D6	5931	0	dBA	3609	0	dBA	4629	0	dBA	12773	0	dBA
Excavator_CAT_D6_02_tf	EX Dozer--CAT D6	3670	0	dBA	2359	0	dBA	6939	0	dBA	11714	0	dBA
Dozer_CAT_D8_tf	Dozer--CAT D8	4793	0	dBA	3741	0	dBA	5247	0	dBA	11496	0	dBA
DewateringPump_01_tf	Dewatering Pump--DeWPump	5104	0	dBA	4293	0	dBA	4817	0	dBA	11318	0	dBA
DewateringPump_03_tf	Dewatering Pump--DeWPump	5457	0	dBA	3906	0	dBA	4680	0	dBA	12009	0	dBA
DewateringPump_02_tf	Dewatering Pump--DeWPump	5702	0	dBA	2810	0	dBA	5368	0	dBA	13099	0	dBA
Exca_CAT336_01_tf	Excavator--CAT 336	4158	0	dBA	3763	0	dBA	5793	0	dBA	10961	0	dBA
Exca_CAT336_02_tf	Excavator--CAT 336	5721	0	dBA	2963	0	dBA	5227	0	dBA	13015	0	dBA
Exca_CAT336_03_tf	Excavator--CAT 336	4624	0	dBA	1846	0	dBA	6579	0	dBA	12655	0	dBA
FlatBedBoomTruck_tf	Flat Bed or Boom Truck --	MS	0	dBA	MS	0	dBA	MS	0	dBA	MS	0	dBA
LightDutyPickUp_tf	Pick-up--F150	MS	0	dBA	MS	0	dBA	MS	0	dBA	MS	0	dBA
Skidder_JD640_01_tf	Skidder--JD 640L	4923	0	dBA	3817	0	dBA	5114	0	dBA	11552	0	dBA
Skidder_JD640_02_tf	Skidder--JD 640L	4313	0	dBA	3786	0	dBA	5646	0	dBA	11059	0	dBA
TandemWaterTruck_2500_pr	Tadem Water Trucks-- 2500 gls	MS	0	dBA	MS	0	dBA	MS	0	dBA	MS	0	dBA
TMF_DamDiesel_DieselGen_case	DieselGen_100kW_Case--Diesel GenSet Casing	4562	0	dBA	3666	0	dBA	5467	0	dBA	11357	0	dBA
CFR_Plant	CFR Plant Area	4879	18	dBA	5990	16	dBA	5475	17	dBA	9350	10	dBA
CRF_conveyor	Stockpile Conveyor--w=1.35m; l=183m; 28.1m rise	MS	0	dBA	MS	-3	dBA	MS	-1	dBA	MS	-10	dBA
PastePlantDustCollector	Paste Plant Dust Collector	5274	-20	dBA	6663	-9	dBA	5545	-6	dBA	8925	-23	dBA
PastePlantFacade_Top	Paste Plant top--	5260	9	dBA	6686	6	dBA	5586	9	dBA	8879	3	dBA
PastePlant_F1	Paste Plant facade 1--	MS	6	dBA	MS	4	dBA	MS	6	dBA	MS	-10	dBA
PastePlant_F2	Paste Plant facade 2--	MS	-7	dBA	MS	-8	dBA	MS	7	dBA	MS	-9	dBA
PastePlant_F3	Paste Plant facade 3--	MS	-8	dBA	MS	-9	dBA	MS	-4	dBA	MS	0	dBA
PastePlant_F4	Paste Plant facade 4--	MS	8	dBA	MS	5	dBA	MS	-3	dBA	MS	2	dBA
SnapAirBlower_PastePlant	Paste Plant (Backfill) Outdoors--Snap Air Blower 1	5279	-47	dBA	6680	-45	dBA	5553	-33	dBA	8910	-50	dBA
TailingsStorageTankAgitator	Paste Plant (Backfill) Outdoors--Tailings Storage Tank Agitator	5302	-23	dBA	6730	-22	dBA	5575	-5	dBA	8869	-15	dBA
ThickenerRecirculatingPump	Paste Plant (Backfill) Outdoors--Thickener Recirculation Pump	5295	-24	dBA	6713	-23	dBA	5567	-7	dBA	8883	-29	dBA
ThickerUFPumpPastePlant	Paste Plant (Backfill) Outdoors--Thickener UF Pump	5287	-24	dBA	6696	-23	dBA	5560	-7	dBA	8897	-30	dBA
SubstationArea	Substation Area cumulative	2576	6	dBA	5669	-5	dBA	7882	-9	dBA	8265	-10	dBA
VentilationFan_LP_RAR2	VF_LP_RAR2--LP Return Air Raise	5743	7	dBA	8128	1	dBA	6790	4	dBA	7356	3	dBA
VentilationFan_LP_RAR2	VF_LP_RAR2--LP Return Air Raise	5742	7	dBA	8128	1	dBA	6790	4	dBA	7355	3	dBA
VentilationFan_VIG_FAR	VF_VIG_FAR--Viggo Fresh Air Raise	6055	2	dBA	8579	-5	dBA	7062	-1	dBA	7026	-1	dBA
VentilationFan_VIG_FAR	VF_VIG_FAR--Viggo Fresh Air Raise	6055	2	dBA	8579	-5	dBA	7062	-1	dBA	7026	-1	dBA
VentilationFan_VIG_RAR	VF_VIG_RAR--Viggo Return Air Raise	5915	-3	dBA	8474	-10	dBA	7096	-6	dBA	7011	-6	dBA
VentilationFan_VIG_RAR	VF_VIG_RAR--Viggo Return Air Raise	5915	-3	dBA	8474	-10	dBA	7096	-6	dBA	7011	-6	dBA
HVAC_Emul_in	HVAC_inlet--	5567	-10	dBA	8962	-18	dBA	8523	-17	dBA	5682	-10	dBA
HVAC_Emul_in	HVAC_inlet--	5570	-10	dBA	8965	-18	dBA	8523	-17	dBA	5681	-10	dBA
HVAC_Emul_in	HVAC_inlet--	5572	-10	dBA	8968	-18	dBA	8524	-17	dBA	5680	-10	dBA
HVAC_Emul_in	HVAC_inlet--	5575	-10	dBA	8970	-18	dBA	8524	-17	dBA	5678	-10	dBA
HVAC_Emul_out	HVAC_outlet--	5567	-12	dBA	8962	-21	dBA	8523	-20	dBA	5682	-12	dBA
HVAC_Emul_out	HVAC_outlet--	5570	-12	dBA	8965	-21	dBA	8523	-20	dBA	5681	-12	dBA
HVAC_Emul_out	HVAC_outlet--	5572	-12	dBA	8968	-21	dBA	8524	-20	dBA	5680	-12	dBA
HVAC_Emul_out	HVAC_outlet--	5575	-12	dBA	8970	-21	dBA	8524	-20	dBA	5678	-12	dBA
HVAC_Mag_S_in	HVAC_inlet--	4799	-8	dBA	7933	-16	dBA	7858	-15	dBA	6596	-13	dBA
HVAC_Mag_S_in	HVAC_inlet--	4802	-8	dBA	7936	-16	dBA	7859	-15	dBA	6594	-20	dBA
HVAC_Mag_S_in	HVAC_inlet--	4804	-8	dBA	7938	-16	dBA	7859	-15	dBA	6592	-12	dBA
HVAC_Mag_S_in	HVAC_inlet--	4807	-8	dBA	7941	-16	dBA	7860	-15	dBA	6591	-12	dBA
HVAC_Mag_S_out	HVAC_outlet--	4799	-11	dBA	7933	-18	dBA	7858	-18	dBA	6596	-15	dBA
HVAC_Mag_S_out	HVAC_outlet--	4802	-11	dBA	7936	-18	dBA	7858	-18	dBA	6594	-24	dBA

Notes on Table:
1. dBA = 1-hour energy equivalent sound (Leq (1-hr))
2. Height above local grade 3. MS = Mobile Source

Table A-3b: Underground Production - Point of Reception Noise Impact

Evening/Nighttime - LAeq,1hr

Project: Great Bear Project
Location: Red Lake, ON

Source ID	Source Description	Residence/Cabin/Lodge/Camp POR1 POR1 POR1 **Point of Reception ID POR1**			Residence/Cabin/Lodge/Camp POR4 POR4 POR4 **Point of Reception ID POR4**			Residence/Cabin/Lodge/Camp POR5 POR5 POR5 **Point of Reception ID POR5**			Residence/Cabin/Lodge/Camp POR6 POR6 POR6 **Point of Reception ID POR6**		
		Point of Reception Description			**Point of Reception Description**			**Point of Reception Description**			**Point of Reception Description**		
		Residence/Cabin/Lodge/Camp			**Residence/Cabin/Lodge/Camp**			**Residence/Cabin/Lodge/Camp**			**Residence/Cabin/Lodge/Camp**		
		Point of reception coordinates			**Point of reception coordinates**			**Point of reception coordinates**			**Point of reception coordinates**		
		X	**Y**	**Z [2]**	**X**	**Y**	**Z [2]**	**X**	**Y**	**Z [2]**	**X**	**Y**	**Z [2]**
		456965	5639223	372	451915	5639044	357	451671	5630891	354	465139	5634939	350
		Point of Reception 1			**Point of Reception 4**			**Point of Reception 5**			**Point of Reception 6**		
		Distance [3] (m)	**Sound Level at PoR**	**Units [1] (dBA)**	**Distance [3] (m)**	**Sound Level at PoR**	**Units [1] (dBA)**	**Distance [3] (m)**	**Sound Level at PoR**	**Units [1] (dBA)**	**Distance [3] (m)**	**Sound Level at PoR**	**Units [1] (dBA)**
HVAC_Mag_S_out	HVAC_outlet--	4804	-10	dBA	7938	-18	dBA	7859	-18	dBA	6593	-15	dBA
HVAC_Mag_S_out	HVAC_outlet--	4807	-10	dBA	7941	-18	dBA	7859	-18	dBA	6591	-15	dBA
Transformer_600kVA	600 kVA--Transformer	5577	-34	dBA	8976	-48	dBA	8532	-40	dBA	5671	-34	dBA
VentilationFan_Discovery_FAR	UG ventilation for Discovery Fresh Air Raise	4604	7	dBA	5435	6	dBA	5477	6	dBA	9723	-6	dBA
VentilationFan_Discovery_FAR	UG ventilation for Discovery Fresh Air Raise	4604	7	dBA	5435	6	dBA	5478	6	dBA	9723	-6	dBA
VentilationFan_Discovery_RAR	UG ventilation for Discovery Return Air Raise	4492	7	dBA	5191	5	dBA	5505	4	dBA	9886	-8	dBA
VentilationFan_Discovery_RAR	UG ventilation for Discovery Return Air Raise	4492	7	dBA	5191	5	dBA	5505	4	dBA	9886	-8	dBA
VentilationFan_HingeLimb_FAR2	UG ventilation for Hinge and Limb Fresh Air Raise 2	5631	23	dBA	7289	18	dBA	5760	23	dBA	8490	15	dBA
VentilationFan_HingeLimb_FAR2	UG ventilation for Hinge and Limb Fresh Air Raise 2	5631	23	dBA	7289	18	dBA	5761	23	dBA	8489	15	dBA
VentilationFan_HingeLimb_RAR	UG ventilation for Hinge and Limb Return Air Raise	5664	1	dBA	6955	-3	dBA	5321	2	dBA	8991	-8	dBA
VentilationFan_HingeLimb_RAR	UG ventilation for Hinge and Limb Return Air Raise	5664	1	dBA	6954	-3	dBA	5322	2	dBA	8991	-8	dBA
BusPersonnel_01_pp	Bus (60 seats)--BusPersonnel	MS	0	dBA	MS	0	dBA	MS	0	dBA	MS	0	dBA
BusPersonnel_02_pp	Bus (60 seats)--BusPersonnel	MS	0	dBA	MS	0	dBA	MS	0	dBA	MS	0	dBA
BusPersonnel_03_pp	Bus (60 seats)--BusPersonnel	MS	0	dBA	MS	0	dBA	MS	0	dBA	MS	0	dBA
BusPersonnel_04_pp	Bus (60 seats)--BusPersonnel	MS	0	dBA	MS	0	dBA	MS	0	dBA	MS	0	dBA
BusPersonnel_05_pp	Bus (60 seats)--BusPersonnel	MS	0	dBA	MS	0	dBA	MS	0	dBA	MS	0	dBA
ContainerTrailerTruck_pp	Container Trailer Truck--ContTT	MS	0	dBA	MS	0	dBA	MS	0	dBA	MS	0	dBA
Dozer_CAT_D10_02_pp	Dozer - D10--CAT D10	3221	24	dBA	6130	16	dBA	7573	13	dBA	7971	12	dBA
Dozer_CAT_D10_pp	Dozer - D10--CAT D10	4152	21	dBA	5766	16	dBA	6192	16	dBA	8976	10	dBA
Dozer_CAT_D6_01_pp	Dozer - D6--CAT D6	4049	18	dBA	7214	10	dBA	7820	9	dBA	7048	11	dBA
Dozer_CAT_D6_02_pp	Dozer - D6--CAT D6	4223	17	dBA	7191	10	dBA	7556	10	dBA	7205	10	dBA
Dozer_CAT_D6_03_pp	Dozer - D6--CAT D6	3433	20	dBA	5204	15	dBA	6673	12	dBA	9122	7	dBA
Dozer_CAT_D8_pit	Dozer--CAT D8	3650	26	dBA	5792	20	dBA	6791	18	dBA	8598	15	dBA
DewateringPump_01_pp	Dewatering Pump--DeWPump	4777	-1	dBA	6294	-6	dBA	5843	-5	dBA	8883	-14	dBA
DewateringPump_02_pp	Dewatering Pump--DeWPump	5720	-14	dBA	7869	-11	dBA	6427	-7	dBA	7738	-11	dBA
DewateringPump_03_pp	Dewatering Pump--DeWPump	4693	-1	dBA	6309	-6	dBA	5961	-5	dBA	8785	-14	dBA
DewateringPump_04_pp	Dewatering Pump--DeWPump	5059	-2	dBA	8027	-11	dBA	7631	-10	dBA	6708	-8	dBA
DewateringPump_05_pp	Dewatering Pump--DeWPump	5690	-15	dBA	7798	-11	dBA	6365	-6	dBA	7811	-11	dBA
DewateringPump_06_pp	Dewatering Pump--DeWPump	5964	-14	dBA	8766	-14	dBA	7530	-10	dBA	6568	-8	dBA
DewateringPump_07_pp	Dewatering Pump--DeWPump	5378	-3	dBA	7356	-10	dBA	6201	-6	dBA	8092	-12	dBA
DewateringPump_08_pp	Dewatering Pump--DeWPump	4676	-5	dBA	6843	-8	dBA	6524	-7	dBA	8075	-12	dBA
DewateringPump_09_pp	Dewatering Pump--DeWPump	5938	-5	dBA	8389	-12	dBA	6920	-8	dBA	7186	-9	dBA
DewateringPump_10_pp	Dewatering Pump--DeWPump	6054	-6	dBA	8901	-14	dBA	7635	-10	dBA	6452	-9	dBA
DiePump_01_pp	Diesel Pump--HL250M	4921	-20	dBA	7254	-28	dBA	6697	-26	dBA	7742	-29	dBA
DiePump_02_pp	Diesel Pump--HL250M	4705	-20	dBA	6624	-26	dBA	6249	-24	dBA	8394	-31	dBA
DiePump_03_pp	Diesel Pump--HL250M	6305	-25	dBA	9056	-32	dBA	7526	-28	dBA	6541	-25	dBA
DiePump_04_pp	Diesel Pump--HL250M	5575	-22	dBA	7958	-29	dBA	6771	-26	dBA	7416	-28	dBA
DiePump_05_pp	Diesel Pump--HL250M	6163	-24	dBA	8762	-31	dBA	7216	-27	dBA	6860	-26	dBA
Excavator_CAT374_01_pp	Excavator--CAT 374	4637	5	dBA	6583	0	dBA	6294	1	dBA	8384	-3	dBA
Excavator_CAT374_02_pp	Excavator--CAT 374	5666	2	dBA	7819	-3	dBA	6431	0	dBA	7748	-3	dBA
Excavator_CAT374_03_pp	Excavator--CAT 374	4072	7	dBA	5646	3	dBA	6206	2	dBA	9052	-3	dBA
CrushFeeder_CAT777_idling	Haul Truck--CAT 777F	5053	3	dBA	5258	5	dBA	4899	19	dBA	10336	8	dBA
FrontLoaderSmallerCAT966_01_pp	Front End Loader (smaller)--CAT 966	4209	16	dBA	5877	12	dBA	6203	11	dBA	8891	7	dBA
FrontLoaderSmallerCAT966_02_pp	Front End Loader (smaller)--CAT 966	4264	16	dBA	7318	9	dBA	7677	9	dBA	7057	10	dBA
FlatDeckTruck_pp	Flat Deck Truck--FlatDT	MS	0	dBA	MS	0	dBA	MS	0	dBA	MS	0	dBA
FrontLoaderCAT993_02_pp	Front End Loader--CAT993	3655	22	dBA	5797	16	dBA	6789	14	dBA	8594	11	dBA
FrontLoaderCAT993_03_pp	Front End Loader--CAT993	4097	20	dBA	7286	13	dBA	7858	12	dBA	6980	13	dBA
Fork_CATDP4055_01_pp	Forklift--Cat DP40-55(C)N3, 5.5t	4321	1	dBA	4939	-5	dBA	5617	-5	dBA	10003	-9	dBA
Fork_CATDP4055_02_pp	Forklift--Cat DP40-55(C)N3, 5.5t	4232	1	dBA	4786	0	dBA	5677	-2	dBA	10087	-23	dBA
Fork_CATDP4055_03_pp	Forklift--Cat DP40-55(C)N3, 5.5t	4479	0	dBA	4941	-1	dBA	5446	-14	dBA	10132	-21	dBA
Fork_CATDP4055_04_pp	Forklift--Cat DP40-55(C)N3, 5.5t	4187	0	dBA	4755	-4	dBA	5719	-3	dBA	10083	-10	dBA

Notes on Table:
1. dBA = 1-hour energy equivalent sound (Leq (1-hr))
2. Height above local grade 3. MS = Mobile Source

Table A-3b: Underground Production - Point of Reception Noise Impact

Evening/Nighttime - LAeq,1hr

Project: Great Bear Project
Location: Red Lake, ON

Source ID	Source Description	Residence/Cabin/Lodge/Camp POR1 POR1 POR1 **Point of Reception ID POR1**			Residence/Cabin/Lodge/Camp POR4 POR4 POR4 **Point of Reception ID POR4**			Residence/Cabin/Lodge/Camp POR5 POR5 POR5 **Point of Reception ID POR5**			Residence/Cabin/Lodge/Camp POR6 POR6 POR6 **Point of Reception ID POR6**		
		Point of Reception Description			**Point of Reception Description**			**Point of Reception Description**			**Point of Reception Description**		
		Residence/Cabin/Lodge/Camp			**Residence/Cabin/Lodge/Camp**			**Residence/Cabin/Lodge/Camp**			**Residence/Cabin/Lodge/Camp**		
		Point of reception coordinates			**Point of reception coordinates**			**Point of reception coordinates**			**Point of reception coordinates**		
		X	**Y**	**Z [2]**	**X**	**Y**	**Z [2]**	**X**	**Y**	**Z [2]**	**X**	**Y**	**Z [2]**
		456965	5639223	372	451915	5639044	357	451671	5630891	354	465139	5634939	350
		Point of Reception 1			**Point of Reception 4**			**Point of Reception 5**			**Point of Reception 6**		
		Distance [3] (m)	**Sound Level at PoR**	**Units [1] (dBA)**	**Distance [3] (m)**	**Sound Level at PoR**	**Units [1] (dBA)**	**Distance [3] (m)**	**Sound Level at PoR**	**Units [1] (dBA)**	**Distance [3] (m)**	**Sound Level at PoR**	**Units [1] (dBA)**
Fork_CATDP4055_05_pp	Forklift--Cat DP40-55(C)N3, 5.5t	4479	0	dBA	4941	-1	dBA	5446	-14	dBA	10132	-21	dBA
FuelTankerTruck_CAT740_01_pp	Fuel Tanker Truck (30,000 L)--CAT 740	MS	0	dBA	MS	0	dBA	MS	0	dBA	MS	0	dBA
FuelTankerTruck_02_pp	Fuel Tanker Truck (30,000 L)--CAT 740	MS	0	dBA	MS	0	dBA	MS	0	dBA	MS	0	dBA
FusionMachine_01_pp	Fusion Machine--Ritmo Delta 250	4894	-25	dBA	5589	-16	dBA	5214	-15	dBA	9823	-30	dBA
FusionMachine_02_pp	Fusion Machine--Ritmo Delta 250	4452	-13	dBA	7395	-23	dBA	7530	-24	dBA	7097	-22	dBA
FusionMachine_03_pp	Fusion Machine--Ritmo Delta 250	4800	-13	dBA	5444	-20	dBA	5256	-15	dBA	9892	-33	dBA
HighCubeTruck_pp	High Cube Truck--Ford F-650 SD DIESEL	MS	0	dBA	MS	0	dBA	MS	0	dBA	MS	0	dBA
IntegratedToolCarrier_pp	Integrated Tool Carrier--WA200-7	3024	10	dBA	5432	3	dBA	7236	0	dBA	8676	-3	dBA
LowboyNTractor_75t_pp	Lowboy and Tractor--75ton - 100ton	MS	0	dBA	MS	0	dBA	MS	0	dBA	MS	0	dBA
MechanicsTruck_01_pp	Mechanics Truck--Mtruck	MS	0	dBA	MS	0	dBA	MS	0	dBA	MS	0	dBA
MechanicsTruck_02_pp	Mechanics Truck--Mtruck	MS	0	dBA	MS	0	dBA	MS	0	dBA	MS	0	dBA
MechanicsTruck_03_pp	Mechanics Truck--Mtruck	MS	0	dBA	MS	0	dBA	MS	0	dBA	MS	0	dBA
MechanicsTruck_04_pp	Mechanics Truck--Mtruck	MS	0	dBA	MS	0	dBA	MS	0	dBA	MS	0	dBA
MechanicsTruck_05_pp	Mechanics Truck--Mtruck	MS	0	dBA	MS	0	dBA	MS	0	dBA	MS	0	dBA
MobileCrane150t_pp	150t Mobile Crane--MobCrane150t	4489	2	dBA	5002	-8	dBA	5451	-17	dBA	10079	-15	dBA
MobileCrane50t_01_pp	50t Mobile Crane--Tadano GR-500XL	4492	11	dBA	4925	10	dBA	5429	-10	dBA	10160	-5	dBA
PortableWaterTruck_pp	Portable Water Truck--PoWT	MS	0	dBA	MS	0	dBA	MS	0	dBA	MS	0	dBA
PickUp_F150_01_pp	Pick-up--F150	MS	0	dBA	MS	-9	dBA	MS	-11	dBA	MS	-19	dBA
PickUp_F150_02_pp	Pick-up--F150	MS	0	dBA	MS	8	dBA	MS	-5	dBA	MS	-19	dBA
PickUpTruck_F150_03_pp	Pick-up--F150	MS	-3	dBA	MS	-11	dBA	MS	-12	dBA	MS	-20	dBA
RoadGrader_CAT16_01_pp	Road Grader--CAT 16	MS	15	dBA	MS	2	dBA	MS	-1	dBA	MS	-3	dBA
RoadGrader_CAT16_02_pp	Road Grader--CAT 16	MS	6	dBA	MS	12	dBA	MS	7	dBA	MS	-6	dBA
RoadGrader_CAT16_03_pp	Road Grader--CAT 16	MS	4	dBA	MS	15	dBA	MS	-1	dBA	MS	-11	dBA
SewageCollectionTruck_pp	Sewage Collection Truck--SewColTruck	MS	0	dBA	MS	0	dBA	MS	0	dBA	MS	0	dBA
DieselGenSet_200kW_Shaft	DieselGen_200kW_Case--Diesel GenSet Casing	4980	0	dBA	6400	0	dBA	5677	0	dBA	8952	0	dBA
DieselGenset 200kw_Shaft_ex	DieselGen_200kW_Ex--Diesel GenSet Exhaust	4980	0	dBA	6400	0	dBA	5678	0	dBA	8951	0	dBA
Shovel_10m3_pp	Shovel 10.0 m3--CAT 6015	4358	18	dBA	5470	15	dBA	5778	14	dBA	9474	7	dBA
SkidSteer_CAT650_01_pp	Skid Steer--Bobcat S650	4305	3	dBA	4737	2	dBA	5593	0	dBA	10191	-12	dBA
SkidSteer_CAT650_02_pp	Skid Steer--Bobcat S650	4467	1	dBA	4950	0	dBA	5462	-15	dBA	10113	-8	dBA
SnowWaterTruck_01_pp	Snow Plow/Water Truck--T880	MS	0	dBA	MS	0	dBA	MS	0	dBA	MS	0	dBA
SnowWaterTruck_02_pp	Snow Plow/Water Truck--T880	MS	0	dBA	MS	0	dBA	MS	0	dBA	MS	0	dBA
TLB_CAT422_01_pp	TLB--Cat 422F2	5085	-14	dBA	5276	-1	dBA	4869	-1	dBA	10348	-10	dBA
TLB_CAT422_02_pp	TLB--Cat 422F2	4792	-1	dBA	5126	-1	dBA	5152	-1	dBA	10221	-10	dBA
WaterTruck_CAT740_01_pp	Water Truck (30,000 L)--CAT 740	MS	0	dBA	MS	0	dBA	MS	0	dBA	MS	0	dBA
WaterTruck_02_pp	Water Truck (30,000 L)--CAT 740	MS	0	dBA	MS	0	dBA	MS	0	dBA	MS	0	dBA
BackHow_PC1250_q	Quarry Source - Production Backhoe--PC1250 (6.7m3)	5287	0	dBA	2232	0	dBA	5976	0	dBA	13031	0	dBA
BackHoe_330_bp	Backhoe--330	4733	0	dBA	911	0	dBA	7378	0	dBA	13221	0	dBA
BlastTruck_F350_q	Blasters Truck--F350	MS	0	dBA	MS	0	dBA	MS	0	dBA	MS	0	dBA
Dozer_CAT_D6_bp	Dozer - D6--CAT D6	4469	0	dBA	1675	0	dBA	6822	0	dBA	12633	0	dBA
Dozer_CAT_D8_q	Dozer--CAT D8	6101	0	dBA	3042	0	dBA	5117	0	dBA	13401	0	dBA
DewateringPump_01_q	Dewatering Pump--DeWPump	6048	0	dBA	2916	0	dBA	5243	0	dBA	13426	0	dBA
DewateringPump_02_q	Dewatering Pump--DeWPump	6242	0	dBA	3203	0	dBA	4958	0	dBA	13456	0	dBA
DewateringPump_01_bp	Dewatering Pump--DeWPump	4501	0	dBA	1706	0	dBA	6773	0	dBA	12639	0	dBA
DewateringPump_02_bp	Dewatering Pump--DeWPump	6016	0	dBA	3555	0	dBA	4649	0	dBA	12915	0	dBA
Loader_L1350_q	Quarry Source - Production Loader--L-1350 (23m3)	5317	0	dBA	2524	0	dBA	5713	0	dBA	12879	0	dBA
Loader_CAT966_bp	Borrow Source - Loader (FEL)--CAT 966	MS	0	dBA	MS	0	dBA	MS	0	dBA	MS	0	dBA
PrimaryDrill_D65_01_q	Primary Drill--140mm SmartRoc D65	6025	0	dBA	2986	0	dBA	5172	0	dBA	13349	0	dBA
PrimaryDrill_D65_02_q	Primary Drill--140mm SmartRoc D65	6192	0	dBA	3125	0	dBA	5035	0	dBA	13451	0	dBA
PickUp_F150_q	Pick-up--F150	MS	0	dBA	MS	0	dBA	MS	0	dBA	MS	0	dBA
RockCrusher_UD211_01_q	Rock Crusher--Sandvik UD211	6220	0	dBA	3069	0	dBA	5097	0	dBA	13526	0	dBA
ScreeningPlant_bp	Borrow Source - Screening Plant--	4642	0	dBA	1665	0	dBA	6724	0	dBA	12770	0	dBA

Notes on Table:
1. dBA = 1-hour energy equivalent sound (Leq (1-hr))
2. Height above local grade 3. MS = Mobile Source

Table A-3b: Underground Production - Point of Reception Noise Impact

Evening/Nighttime - LAeq,1hr

Project: Great Bear Project
Location: Red Lake, ON

Source ID	Source Description	Residence/Cabin/Lodge/Camp POR1 POR1 POR1 Point of Reception ID POR1			Residence/Cabin/Lodge/Camp POR4 POR4 POR4 Point of Reception ID POR4			Residence/Cabin/Lodge/Camp POR5 POR5 POR5 Point of Reception ID POR5			Residence/Cabin/Lodge/Camp POR6 POR6 POR6 Point of Reception ID POR6		
		Point of Reception Description			Point of Reception Description			Point of Reception Description			Point of Reception Description		
		Residence/Cabin/Lodge/Camp			Residence/Cabin/Lodge/Camp			Residence/Cabin/Lodge/Camp			Residence/Cabin/Lodge/Camp		
		Point of reception coordinates			Point of reception coordinates			Point of reception coordinates			Point of reception coordinates		
		X	Y	Z [2]	X	Y	Z [2]	X	Y	Z [2]	X	Y	Z [2]
		456965	5639223	372	451915	5639044	357	451671	5630891	354	465139	5634939	350
		Point of Reception 1			Point of Reception 4			Point of Reception 5			Point of Reception 6		
		Distance [3] (m)	Sound Level at PoR	Units [1] (dBA)	Distance [3] (m)	Sound Level at PoR	Units [1] (dBA)	Distance [3] (m)	Sound Level at PoR	Units [1] (dBA)	Distance [3] (m)	Sound Level at PoR	Units [1] (dBA)
UGR22 TMF Facility to WestDam	Articulating Truck--40t	MS	0	dBA	MS	0	dBA	MS	0	dBA	MS	0	dBA
UGR20_40t_TMFFacility_to_NorthDam	Articulating Truck--40t	MS	0	dBA	MS	0	dBA	MS	0	dBA	MS	0	dBA
UGR21 TMF Facility to SouthDam	Articulating Truck--40t	MS	0	dBA	MS	0	dBA	MS	0	dBA	MS	0	dBA
UGR7 NorthDam to Overburden#4	Articulating Truck--40t	MS	0	dBA	MS	0	dBA	MS	0	dBA	MS	0	dBA
UGR8 SouthDam to Overburden#3	Articulating Truck--40t	MS	0	dBA	MS	0	dBA	MS	0	dBA	MS	0	dBA
UGR9_Art40t_WestDam_to_OVB5	Articulating Truck--40t	MS	0	dBA	MS	0	dBA	MS	0	dBA	MS	0	dBA
UGR10_777_TMFFacility_to_NorthDam	Haul Truck--CAT 777F	MS	0	dBA	MS	0	dBA	MS	0	dBA	MS	0	dBA
UGR11 BorrowSource#3 to NorthDam	Haul Truck--CAT 777F	MS	0	dBA	MS	0	dBA	MS	0	dBA	MS	0	dBA
UGR12 NPAG Stockpile to NorthDam	Haul Truck--CAT 777F	MS	0	dBA	MS	0	dBA	MS	0	dBA	MS	0	dBA
UGR13 TMF Facility to SouthDam	Haul Truck--CAT 777F	MS	0	dBA	MS	0	dBA	MS	0	dBA	MS	0	dBA
UGR14 BorrowSource#3 to SouthDam	Haul Truck--CAT 777F	MS	0	dBA	MS	0	dBA	MS	0	dBA	MS	0	dBA
UGR16 TMF Facility to WestDam	Haul Truck--CAT 777F	MS	0	dBA	MS	0	dBA	MS	0	dBA	MS	0	dBA
UGR17 BorrowSource#3 to WestDam	Haul Truck--CAT 777F	MS	0	dBA	MS	0	dBA	MS	0	dBA	MS	0	dBA
UGR18 NPAG Stockpile to WestDam	Haul Truck--CAT 777F	MS	0	dBA	MS	0	dBA	MS	0	dBA	MS	0	dBA
UGR19 NPAGStockpile to RoadBase	Haul Truck--CAT 777F	MS	0	dBA	MS	0	dBA	MS	0	dBA	MS	0	dBA
UGR23 AEXPortal to PAG Stockpile	Haul Truck--CAT 777F	MS	35	dBA	MS	28	dBA	MS	27	dBA	MS	26	dBA
UGR1 LGO Stockpile west to Crusher	Haul Truck--CAT 785	MS	23	dBA	MS	20	dBA	MS	21	dBA	MS	13	dBA
UGR2 LGO Stockpile big to Crusher	Haul Truck--CAT 785	MS	21	dBA	MS	19	dBA	MS	20	dBA	MS	12	dBA
UGR4 Shaft to Crusher	Haul Truck--CAT 785	MS	10	dBA	MS	8	dBA	MS	9	dBA	MS	0	dBA
UGR5 AEXPortal to PAG Stockpile	Haul Truck--CAT 785	MS	13	dBA	MS	7	dBA	MS	7	dBA	MS	3	dBA
UGR6 AEXPortal to NPAG Stockpile	Haul Truck--CAT 785	MS	22	dBA	MS	17	dBA	MS	16	dBA	MS	10	dBA
HVAC_Admin_in	HVAC_inlet--	5009	-8	dBA	5503	-10	dBA	5039	-8	dBA	10030	-20	dBA
HVAC_Admin_out	HVAC_outlet--	5009	-10	dBA	5506	-12	dBA	5040	-10	dBA	10027	-23	dBA
HVAC_CAMP_A_in	HVAC_inlet--	5065	-8	dBA	5502	-10	dBA	4973	-8	dBA	10087	-20	dBA
HVAC_CAMP_A_out	HVAC_outlet--	5068	-10	dBA	5503	-12	dBA	4971	-10	dBA	10089	-23	dBA
HVAC_CAMP_B_in	HVAC_inlet--	5067	-8	dBA	5519	-10	dBA	4978	-8	dBA	10071	-20	dBA
HVAC_CAMP_B_out	HVAC_outlet--	5069	-10	dBA	5520	-12	dBA	4976	-10	dBA	10071	-23	dBA
HVAC_CAMP_C_in	HVAC_inlet--	5067	-8	dBA	5533	-10	dBA	4984	-8	dBA	10055	-20	dBA
HVAC_CAMP_C_out	HVAC_outlet--	5070	-10	dBA	5535	-12	dBA	4982	-10	dBA	10056	-23	dBA
HVAC_Kitchen_in	HVAC_inlet--	5046	-8	dBA	5541	-10	dBA	5013	-8	dBA	10026	-20	dBA
HVAC_Kitchen_out	HVAC_outlet--	5046	-10	dBA	5544	-12	dBA	5014	-10	dBA	10023	-23	dBA
HVAC_Storage_in	HVAC_inlet--	4924	-8	dBA	5499	-10	dBA	5136	-8	dBA	9951	-20	dBA
HVAC_Storage_out	HVAC_outlet--	4924	-10	dBA	5502	-12	dBA	5138	-11	dBA	9948	-23	dBA
HVAC_TreatPlant_in	HVAC_inlet--	4996	-8	dBA	5620	-10	dBA	5108	-8	dBA	9890	-20	dBA
HVAC_TREATPlant_out	HVAC_outlet--	4997	-10	dBA	5623	-12	dBA	5109	-10	dBA	9886	-23	dBA
HVAC_Truck_S_in	HVAC_inlet--	4930	-8	dBA	5568	-10	dBA	5161	-8	dBA	9881	-19	dBA
VentilationFan_AEX	VentFan_aex--UG AEX Portal Ventilation Fan	4937	18	dBA	5785	22	dBA	5270	24	dBA	9644	12	dBA
TMF_DamDieselGen_100kW_ex	DieselGen_100kW_Ex--Diesel GenSet Exhaust	4482	-9	dBA	4176	-5	dBA	5410	-11	dBA	10858	-22	dBA
ExploMag_DieselGen_100kW_case	DieselGen_100kW_Case--Diesel GenSet Casing	4785	1	dBA	7922	-4	dBA	7861	-4	dBA	6600	-2	dBA
ExploMagazineDieselGenSet_100kW_ex	DieselGen_100kW_Ex--Diesel GenSet Exhaust	4784	-9	dBA	7923	-16	dBA	7865	-16	dBA	6597	-13	dBA
ExploStor_DieselGen_100kW_case	DieselGen_100kW_Case--Diesel GenSet Casing	5575	0	dBA	8978	-6	dBA	8540	-5	dBA	5664	0	dBA
ExploStorageDieselGenSet_100kW_ex	DieselGen_100kW_Ex--Diesel GenSet Exhaust	5576	-10	dBA	8980	-18	dBA	8543	-17	dBA	5661	-10	dBA
TMF_dam_DieselGen_100kW_case	DieselGen_100kW_Case--Diesel GenSet Casing	4478	1	dBA	4188	3	dBA	5412	0	dBA	10844	-8	dBA
Wat_dixie_DieselGen_100kW_case	DieselGen_100kW_Case--Diesel GenSet Casing	5699	-9	dBA	7831	-5	dBA	6401	-2	dBA	7771	-5	dBA
DixieDewateringDieselGen_100kW_ex	DieselGen_100kW_Ex--Diesel GenSet Exhaust	5697	-21	dBA	7826	-17	dBA	6396	-13	dBA	7776	-17	dBA

Notes on Table:
1. dBA = 1-hour energy equivalent sound (Leq (1-hr))
2. Height above local grade 3. MS = Mobile Source

Table A-3c: Emergency Test for Underground Production Phase - Noise Source Summary

Project: Great Bear Project
Location: Red Lake, ON

Source ID [1]	Source Description	Source Location NAD 83 / UTM zone 15N		Sound Power Level [3]	Sound Power Level Adjustment [3]	Source Location [4]	Sound Characteristics [5]	Noise Control Measures [6]
		Latitude [2]	Longitude [2]					
		(m)	(m)	(dBA)	(+dB)	(I or O)	(S,Q,I,B,T,C)	(S,A,B,L,E,O,U)
DieselGen_500kW	DieselGen_500kW_Case--	455106	5635305	97	0	O	S	E
DieselGen_500kW_ex	DieselGen_500kW_Ex--	455107	5635306	97	0	O	S	S
DieselGenSet_800kW_case	DieselGen_800kW_Case--CAT3516B at 800kW -- Emergency	457243	5637228	125	0	O	S	E
DieselGenSet_800kW_ex	DieselGen_800kW_ex--	457243	5637228	99	0	O	S	S
DieselGenSet_2500kW_ex	Diesel Generator Exhaust 2250kW-- CAT3516B -- Emergency	457072	5636595	101	0	O	S	S
DieselGenSet_2500kW_ex	Diesel Generator Exhaust 2250kW-- CAT3516B -- Emergency	457071	5636597	101	0	O	S	S
DieselGenSet_2500kW_ex	Diesel Generator Exhaust 2250kW-- CAT3516B -- Emergency	456192	5634244	101	0	O	S	S
DieselGenSet_2500kW_ex	Diesel Generator Exhaust 2250kW-- CAT3516B -- Emergency	455110	5634458	101	0	O	S	S
DieselGenSet_2500kW_case	Diesel Generator Mechanical Case 2250kW-- CAT3516B -- Emergency	457062	5636588	117	0	O	S	U
DieselGenSet_2500kW_case	Diesel Generator Mechanical Case 2250kW-- CAT3516B -- Emergency	457060	5636590	117	0	O	S	U
DieselGenSet_2500kW_case	Diesel Generator Mechanical Case 2250kW-- CAT3516B -- Emergency	456200	5634244	117	0	O	S	U
DieselGenSet_2500kW_case	Diesel Generator Mechanical Case 2250kW-- CAT3516B -- Emergency	455112	5634462	117	0	O	S	U
Emergency_SumPump	Emergency Sources--Emergency Sump Pump - Paste (Backfill) Plant - Indoors	456254	5634001	105	0	O	S	U
PowerGen5MW_case	5 MW Natural Gas-Fired Reciprocating Engine Casing	457036	5636622	127	0	O	S	U
PowerGen5MW_ex	5 MW Natural Gas-Fired Reciprocating Engine outlet-- Exhaust	457038	5636620	112	0	O	S	S
Ambulance	Bus (60 seats)--BusPersonnel	454712	5634361	92	0	O	S	U
FireTruck	Pick-up--F150	454680	5634319	98	0	O	S	U

Notes on Table:

1. Wherever possible, the Source ID matches the identifiers used in the ESDM report.
2. Source centre of gravity coordinates used for Line and Area sources. Vertical area source coordinates not provided since corresponding area source coordinates are provided.
3. Sound Power Level of Source, in dBA, including sound characteristic adjustments per NPC-104.
4. Source Location: O = Outside of building, including the roof, I = Inside of building
5. Sound Characteristic, per NPC-104
   S = Steady
   Q = Quasi-Steady Impulsive
   I = Impulsive
   B = Buzzing
   T = Tonal
   C = Cyclic
6. Noise Control Measures Included
   S = Silencer/Muffler
   A = Acoustic lining, plenum
   B = Barrier
   L = Lagging
   E = acoustic enclosure
   O = Other
   U = uncontrolled

Table A-3d: Emergency Test for Underground Production Phase - Noise Source Summary

Daytime - LAeq,1hr

Project: Great Bear Project
Location: Red Lake, ON

Source ID	Source Description	Residence/Cabin/Lodge/Camp POR1 POR1 POR1 Point of Reception ID: POR1			Residence/Cabin/Lodge/Camp POR4 POR4 POR4 Point of Reception ID: POR4			Residence/Cabin/Lodge/Camp POR5 POR5 POR5 Point of Reception ID: POR5			Residence/Cabin/Lodge/Camp POR6 POR6 POR6 Point of Reception ID: POR6		
		Point of Reception 1			Point of Reception 4			Point of Reception 5			Point of Reception 6		
		Distance [3] (m)	Sound Level at PoR	Units [1] (dBA)	Distance [3] (m)	Sound Level at PoR	Units [1] (dBA)	Distance [3] (m)	Sound Level at PoR	Units [1] (dBA)	Distance [3] (m)	Sound Level at PoR	Units [1] (dBA)
Ambulance	Bus (60 seats)--BusPersonnel	MS	1	dBA	MS	-14	dBA	MS	-17	dBA	MS	-24	dBA
DieselGenSet_800kW_case	DieselGen_800kW_Case--CAT3516B at 800kW -- Emergency	2014	35	dBA	5629	23	dBA	8439	16	dBA	8221	17	dBA
DieselGen_500kW	DieselGen_500kW_Case--	4337	-3	dBA	4916	-16	dBA	5594	-6	dBA	10040	-17	dBA
DieselGen_500kW_ex	DieselGen_500kW_Ex--	4335	-7	dBA	4915	-22	dBA	5595	-10	dBA	10039	-25	dBA
DieselGenSet_2500kW_case	Diesel Generator Mechanical Case 2250kW-- CAT3516B --	2636	12	dBA	5703	-2	dBA	7844	-9	dBA	8244	-10	dBA
DieselGenSet_2500kW_case	Diesel Generator Mechanical Case 2250kW-- CAT3516B --	2635	12	dBA	5701	-2	dBA	7844	-9	dBA	8246	-10	dBA
DieselGenSet_2500kW_case	Diesel Generator Mechanical Case 2250kW-- CAT3516B --	5037	0	dBA	6434	-5	dBA	5636	-2	dBA	8966	-12	dBA
DieselGenSet_2500kW_case	Diesel Generator Mechanical Case 2250kW-- CAT3516B --	5109	0	dBA	5587	-2	dBA	4960	0	dBA	10038	-13	dBA
DieselGenSet_2500kW_ex	Diesel Generator Exhaust 2250kW-- CAT3516B -- Emergency	2630	-3	dBA	5709	-17	dBA	7856	-23	dBA	8235	-25	dBA
DieselGenSet_2500kW_ex	Diesel Generator Exhaust 2250kW-- CAT3516B -- Emergency	2628	-3	dBA	5707	-17	dBA	7856	-23	dBA	8237	-25	dBA
DieselGenSet_2500kW_ex	Diesel Generator Exhaust 2250kW-- CAT3516B -- Emergency	5038	-15	dBA	6429	-20	dBA	5630	-17	dBA	8974	-27	dBA
DieselGenSet_2500kW_ex	Diesel Generator Exhaust 2250kW-- CAT3516B -- Emergency	5113	-15	dBA	5589	-16	dBA	4956	-14	dBA	10041	-28	dBA
DieselGenSet_800kW_ex	DieselGen_800kW_ex--	2014	5	dBA	5629	-8	dBA	8439	-15	dBA	8221	-14	dBA
Emergency_SumPump	Emergency Sources--Emergency Sump Pump - Paste (Backfill)	5270	-8	dBA	6653	-9	dBA	5539	-5	dBA	8934	-15	dBA
FireTruck	Pick-up--F150	MS	7	dBA	MS	-8	dBA	MS	-12	dBA	MS	-19	dBA
PowerGen5MW_case	5 MW Natural Gas-Fired Reciprocating Engine Casing	2602	28	dBA	5665	17	dBA	7851	12	dBA	8276	11	dBA
PowerGen5MW_ex	5 MW Natural Gas-Fired Reciprocating Engine outlet-- Exhaust	2604	18	dBA	5668	6	dBA	7851	1	dBA	8274	0	dBA

Point of Reception Description	Residence/Cabin/Lodge/Camp			Residence/Cabin/Lodge/Camp			Residence/Cabin/Lodge/Camp			Residence/Cabin/Lodge/Camp		
Point of reception coordinates	X	Y	Z [2]	X	Y	Z [2]	X	Y	Z [2]	X	Y	Z [2]
	456965	5639223	372	451915	5639044	357	451671	5630891	354	465139	5634939	350

Notes on Table:
1. dBA = 1-hour energy equivalent sound (Leq (1-hr))
2. Height above local grade 3. MS = Mobile Source

Table A-4: Closure Phase - Noise Source Summary

Project: Great Bear Project
Location: Red Lake, ON

Source ID [1]	Source Description	Source Location NAD 83 / UTM zone 15N		Sound Power Level [3]	Sound Power Level Adjustment [3]	Source Location [4]	Sound Characteristics [5]	Noise Control Measures [6]
		Latitude [2]	Longitude [2]					
		(m)	(m)	(dBA)	(+dB)	(I or O)	(S,Q,I,B,T,C)	(S,A,B,L,E,O,U)
CampGenSet_case_closure	DieselGen_250kW_Case--Diesel GenSet Casing	457238	5637351	97	0	O	S	E
CampGenSet_case_closure	DieselGen_250kW_Case--Diesel GenSet Casing	457271	5637351	97	0	O	S	E
DieselGenset 250 kW Exhau	DieselGen_250kW_Ex--Diesel GenSet Exhaust	457243	5637351	104	0	O	S	S
DieselGenset 250 kW Exhau	DieselGen_250kW_Ex--Diesel GenSet Exhaust	457278	5637351	104	0	O	S	S
Excavator_small	Excavator--CAT 374	456033	5635921	107	0	O	S	U
Excavator_small	Excavator--CAT 374	456394	5636042	107	0	O	S	U
LoaderSmall_CAT966	Front End Loader (smaller)--CAT 966	454770	5634614	109	0	O	S	U
LoaderSmall_CAT966	Front End Loader (smaller)--CAT 966	456437	5636008	109	0	O	S	U
HVAC_Truck_S_in	HVAC_inlet--	455264	5634595	94	0	O	S	U
HVAC_TreatPlant_in	HVAC_inlet--	455258	5634527	94	0	O	S	U
HVAC_Storage_in	HVAC_inlet--	455193	5634629	94	0	O	S	U
HVAC_MineAdmin_in	HVAC_inlet--	455114	5635271	94	0	O	S	U
HVAC_Kitchen_in	HVAC_inlet--	455122	5634526	94	0	O	S	U
HVAC_Camp_in	HVAC_inlet--	457219	5637391	94	0	O	S	U
HVAC_Camp_in	HVAC_inlet--	457220	5637372	94	0	O	S	U
HVAC_Camp_in	HVAC_inlet--	457278	5637391	94	0	O	S	U
HVAC_Camp_in	HVAC_inlet--	457278	5637372	94	0	O	S	U
HVAC_CAMP_C_in	HVAC_inlet--	455093	5634514	94	0	O	S	U
HVAC_CAMP_B_in	HVAC_inlet--	455077	5634521	94	0	O	S	U
HVAC_CAMP_A_in	HVAC_inlet--	455060	5634530	94	0	O	S	U
HVAC_Admin_in	HVAC_inlet--	455116	5634568	94	0	O	S	U
HVAC_TREATPlant_out	HVAC_outlet--	455261	5634525	89	0	O	S	U
HVAC_Storage_out	HVAC_outlet--	455196	5634628	89	0	O	S	U
HVAC_mineAdmin_out	HVAC_outlet--	455117	5635269	89	0	O	S	U
HVAC_Kitchen_out	HVAC_outlet--	455125	5634524	89	0	O	S	U
HVAC_Camp_out	HVAC_outlet--	457217	5637391	89	0	O	S	U
HVAC_Camp_out	HVAC_outlet--	457217	5637372	89	0	O	S	U
HVAC_Camp_out	HVAC_outlet--	457276	5637391	89	0	O	S	U
HVAC_Camp_out	HVAC_outlet--	457276	5637372	89	0	O	S	U
HVAC_CAMP_C_out	HVAC_outlet--	455092	5634512	89	0	O	S	U
HVAC_CAMP_B_out	HVAC_outlet--	455076	5634519	89	0	O	S	U
HVAC_CAMP_A_out	HVAC_outlet--	455059	5634527	89	0	O	S	U
HVAC_Admin_out	HVAC_outlet--	455119	5634566	89	0	O	S	U
Loader_CAT992	Loader CAT 992	456985	5634161	116	0	O	S	U

Table A-4: Closure Phase - Noise Source Summary

Project: Great Bear Project
Location: Red Lake, ON

Source ID [1]	Source Description	Source Location NAD 83 / UTM zone 15N		Sound Power Level [3]	Sound Power Level Adjustment [3]	Source Location [4]	Sound Characteristics [5]	Noise Control Measures [6]
		Latitude [2]	Longitude [2]					
		(m)	(m)	(dBA)	(+dB)	(I or O)	(S,Q,I,B,T,C)	(S,A,B,L,E,O,U)
Loader_CAT992	Loader CAT 992	457503	5633931	116	0	O	S	U
MobileCrane50t	50t Mobile Crane--Tadano GR-500XL	454999	5635037	112	0	O	S	U
MobileCrane50t	50t Mobile Crane--Tadano GR-500XL	454800	5634676	112	0	O	S	U
5 MW NaturalGasPower Ca	5 MW Natural Gas-Fired Reciprocating Engine Casing	457003	5636634	117	0	O	S	E
5 MW NaturalGasPower Ca	5 MW Natural Gas-Fired Reciprocating Engine Casing	457007	5636629	117	0	O	S	E
5 MW NaturalGasPower Ca	5 MW Natural Gas-Fired Reciprocating Engine Casing	457012	5636622	117	0	O	S	E
5 MW Gen Exhaust - Power	5 MW Natural Gas-Fired Reciprocating Engine outlet-- Exhaust	457005	5636636	104	0	O	S	S
5 MW Gen Exhaust - Power	5 MW Natural Gas-Fired Reciprocating Engine outlet-- Exhaust	457009	5636630	104	0	O	S	S
5 MW Gen Exhaust - Power	5 MW Natural Gas-Fired Reciprocating Engine outlet-- Exhaust	457014	5636624	104	0	O	S	S
BusPersonnel_02	Bus (60 seats)--BusPersonnel	455136	5635109	104	0	O	S	U
BusPersonnel	Bus (60 seats)--BusPersonnel	456280	5636466	107	0	O	S	U
DieselMineTruck	Diesel Mine Truck -- XCMG XDA40	455333	5634401	104	0	O	S	U
Hauling_CAT777_closure	Haul Truck--CAT 777F	457492	5634216	116	0	O	S	U
Hauling_CAT777_closure	Haul Truck--CAT 777F	455417	5634211	115	0	O	S	U
Hauling_CAT777_closure	Haul Truck--CAT 777F	455327	5634407	110	0	O	S	U
Pickups_F150_02	Pick-up--F150	455134	5635107	104	0	O	S	U
Pickups_F150	Pick-up--F150	456282	5636461	106	0	O	S	U
RoadGrader_CAT16_02_pp	Road Grader--CAT 16	455757	5634742	105	0	O	S	U
RoadGrader_CAT16_01_pp	Road Grader--CAT 16	456995	5635980	106	0	O	S	U
Bulldozer_D9	Bulldozer - D9	456559	5636226	116	0	O	S	U
Bulldozer_D9	Bulldozer - D9	456069	5635910	116	0	O	S	U

Notes on Table:

1. Wherever possible, the Source ID matches the identifiers used in the ESDM report.
2. Source centre of gravity coordinates used for Line and Area sources. Vertical area source coordinates not provided since corresponding area source coordinates are provided.
3. Sound Power Level of Source, in dBA, including sound characteristic adjustments per NPC-104.
4. Source Location: O = Outside of building, including the roof, I = Inside of building
5. Sound Characteristic, per NPC-104
   S = Steady
   Q = Quasi-Steady Impulsive
   I = Impulsive
   B = Buzzing
   T = Tonal
   C = Cyclic
6. Noise Control Measures Included
   S = Silencer/Muffler
   A = Acoustic lining, plenum
   B = Barrier
   L = Lagging
   E = acoustic enclosure
   O = Other
   U = uncontrolled

Table A-4a: Closure Phase - Point of Reception Noise Impact

Daytime - LAeq,1hr

Project: Great Bear Project
Location: Red Lake, ON

Source ID	Source Description	Residence/Cabin/Lodge/Camp POR1 POR1 POR1 Point of Reception ID: POR1			Residence/Cabin/Lodge/Camp POR4 POR4 POR4 Point of Reception ID: POR4			Residence/Cabin/Lodge/Camp POR5 POR5 POR5 Point of Reception ID: POR5			Residence/Cabin/Lodge/Camp POR6 POR6 POR6 Point of Reception ID: POR6		
		Point of Reception 1			Point of Reception 4			Point of Reception 5			Point of Reception 6		
		Distance [3] (m)	Sound Level at PoR	Units [1] (dBA)	Distance [3] (m)	Sound Level at PoR	Units [1] (dBA)	Distance [3] (m)	Sound Level at PoR	Units [1] (dBA)	Distance [3] (m)	Sound Level at PoR	Units [1] (dBA)
5 MW NaturalGasPower Casing - Powe	5 MW Natural Gas-Fired Reciprocating Engine Casing	2589	20	dBA	5629	9	dBA	7837	4	dBA	8311	3	dBA
5 MW NaturalGasPower Casing - Powe	5 MW Natural Gas-Fired Reciprocating Engine Casing	2594	21	dBA	5636	9	dBA	7836	4	dBA	8306	3	dBA
5 MW NaturalGasPower Casing - Powe	5 MW Natural Gas-Fired Reciprocating Engine Casing	2601	21	dBA	5642	9	dBA	7834	5	dBA	8300	3	dBA
5 MW Gen Exhaust - Power Plant	5 MW Natural Gas-Fired Reciprocating Engine outlet-- Exhaust	2587	15	dBA	5631	5	dBA	7840	1	dBA	8309	1	dBA
5 MW Gen Exhaust - Power Plant	5 MW Natural Gas-Fired Reciprocating Engine outlet-- Exhaust	2593	15	dBA	5637	5	dBA	7838	1	dBA	8304	1	dBA
5 MW Gen Exhaust - Power Plant	5 MW Natural Gas-Fired Reciprocating Engine outlet-- Exhaust	2600	15	dBA	5644	5	dBA	7837	1	dBA	8298	1	dBA
DieselGenset 250 kW Exhaust - Permar	DieselGen_250kW_Ex--Diesel GenSet Exhaust	1893	14	dBA	5591	-1	dBA	8532	-9	dBA	8257	-9	dBA
DieselGenset 250 kW Exhaust - Permar	DieselGen_250kW_Ex--Diesel GenSet Exhaust	1898	14	dBA	5624	-2	dBA	8554	-9	dBA	8223	-8	dBA
CampGenSet_case_closure	DieselGen_250kW_Case--Diesel GenSet Casing	1892	12	dBA	5586	0	dBA	8528	-5	dBA	8261	-5	dBA
CampGenSet_case_closure	DieselGen_250kW_Case--Diesel GenSet Casing	1897	12	dBA	5618	0	dBA	8550	-5	dBA	8229	-5	dBA
Bulldozer_D9	Bulldozer - D9	3024	25	dBA	5432	18	dBA	7236	14	dBA	8676	11	dBA
Bulldozer_D9	Bulldozer - D9	3432	24	dBA	5204	19	dBA	6674	15	dBA	9122	11	dBA
BusPersonnel	Bus (60 seats)--BusPersonnel	MS	7	dBA	MS	-7	dBA	MS	-10	dBA	MS	-15	dBA
BusPersonnel_02	Bus (60 seats)--BusPersonnel	MS	7	dBA	MS	-7	dBA	MS	-11	dBA	MS	-18	dBA
MobileCrane50t	50t Mobile Crane--Tadano GR-500XL	4624	-2	dBA	5056	4	dBA	5317	9	dBA	10141	0	dBA
MobileCrane50t	50t Mobile Crane--Tadano GR-500XL	5036	-9	dBA	5235	10	dBA	4911	10	dBA	10343	-20	dBA
DieselMineTruck	Diesel Mine Truck -- XCMG XDA40	MS	-2	dBA	MS	-2	dBA	MS	0	dBA	MS	-12	dBA
Excavator_small	Excavator--CAT 374	3431	9	dBA	5168	4	dBA	6659	1	dBA	9159	-4	dBA
Excavator_small	Excavator--CAT 374	3232	10	dBA	5392	3	dBA	6989	0	dBA	8814	-3	dBA
Hauling_CAT777_closure	Haul Truck--CAT 777F	MS	16	dBA	MS	13	dBA	MS	14	dBA	MS	8	dBA
Hauling_CAT777_closure	Haul Truck--CAT 777F	MS	12	dBA	MS	11	dBA	MS	13	dBA	MS	5	dBA
Hauling_CAT777_closure	Haul Truck--CAT 777F	MS	10	dBA	MS	10	dBA	MS	12	dBA	MS	1	dBA
HVAC_Camp_in	HVAC_inlet--	1850	7	dBA	5556	-10	dBA	8546	-17	dBA	8291	-16	dBA
HVAC_Camp_in	HVAC_inlet--	1869	6	dBA	5562	-10	dBA	8533	-17	dBA	8285	-16	dBA
HVAC_Camp_in	HVAC_inlet--	1859	7	dBA	5612	-10	dBA	8585	-17	dBA	8235	-16	dBA
HVAC_Camp_in	HVAC_inlet--	1878	6	dBA	5618	-10	dBA	8571	-17	dBA	8229	-16	dBA
HVAC_Camp_out	HVAC_outlet--	1850	4	dBA	5554	-12	dBA	8545	-20	dBA	8293	-19	dBA
HVAC_Camp_out	HVAC_outlet--	1868	4	dBA	5560	-12	dBA	8531	-20	dBA	8287	-19	dBA
HVAC_Camp_out	HVAC_outlet--	1858	4	dBA	5610	-12	dBA	8584	-20	dBA	8237	-19	dBA
HVAC_Camp_out	HVAC_outlet--	1877	4	dBA	5616	-12	dBA	8570	-20	dBA	8231	-19	dBA
HVAC_MineAdmin_in	HVAC_inlet--	4364	-6	dBA	4947	-8	dBA	5572	-10	dBA	10031	-20	dBA
HVAC_mineAdmin_out	HVAC_outlet--	4365	-8	dBA	4951	-10	dBA	5572	-12	dBA	10028	-23	dBA
Loader_CAT992	Loader CAT 992	5068	-3	dBA	7043	-7	dBA	6244	0	dBA	8195	-10	dBA
Loader_CAT992	Loader CAT 992	5325	0	dBA	7578	10	dBA	6582	7	dBA	7706	-9	dBA
LoaderSmall_CAT966	Front End Loader (smaller)--CAT 966	5104	7	dBA	5270	13	dBA	4845	14	dBA	10374	5	dBA
LoaderSmall_CAT966	Front End Loader (smaller)--CAT 966	3258	19	dBA	5447	13	dBA	6993	10	dBA	8767	6	dBA
Pickups_F150	Pick-up--F150	MS	7	dBA	MS	-7	dBA	MS	-11	dBA	MS	-15	dBA
Pickups_F150_02	Pick-up--F150	MS	7	dBA	MS	-8	dBA	MS	-12	dBA	MS	-19	dBA
RoadGrader_CAT16_01_pp	Road Grader--CAT 16	MS	15	dBA	MS	2	dBA	MS	-2	dBA	MS	-5	dBA
RoadGrader_CAT16_02_pp	Road Grader--CAT 16	MS	5	dBA	MS	1	dBA	MS	1	dBA	MS	-8	dBA
HVAC_Admin_in	HVAC_inlet--	5009	-8	dBA	5503	-10	dBA	5039	-8	dBA	10030	-20	dBA
HVAC_Admin_out	HVAC_outlet--	5009	-10	dBA	5506	-12	dBA	5040	-10	dBA	10027	-23	dBA
HVAC_CAMP_A_in	HVAC_inlet--	5065	-8	dBA	5502	-10	dBA	4973	-8	dBA	10087	-20	dBA
HVAC_CAMP_A_out	HVAC_outlet--	5068	-10	dBA	5503	-12	dBA	4971	-10	dBA	10089	-23	dBA
HVAC_CAMP_B_in	HVAC_inlet--	5067	-8	dBA	5519	-10	dBA	4978	-8	dBA	10071	-20	dBA
HVAC_CAMP_B_out	HVAC_outlet--	5069	-10	dBA	5520	-12	dBA	4976	-10	dBA	10071	-23	dBA
HVAC_CAMP_C_in	HVAC_inlet--	5067	-8	dBA	5533	-10	dBA	4984	-8	dBA	10055	-20	dBA
HVAC_CAMP_C_out	HVAC_outlet--	5070	-10	dBA	5535	-12	dBA	4982	-10	dBA	10056	-23	dBA
HVAC_Kitchen_in	HVAC_inlet--	5046	-8	dBA	5541	-10	dBA	5013	-8	dBA	10026	-20	dBA

Point of Reception Description: Residence/Cabin/Lodge/Camp
Point of reception coordinates

POR1 X	POR1 Y	POR1 Z [2]	POR4 X	POR4 Y	POR4 Z [2]	POR5 X	POR5 Y	POR5 Z [2]	POR6 X	POR6 Y	POR6 Z [2]
456965	5639223	372	451915	5639044	357	451671	5630891	354	465139	5634939	350

Notes on Table:
1. dBA = 1-hour energy equivalent sound (Leq (1-hr))
2. Height above local grade 3. MS = Mobile Source

Table A-4a: Closure Phase - Point of Reception Noise Impact

Daytime - LAeq,1hr

Project: Great Bear Project
Location: Red Lake, ON

Source ID	Source Description	Residence/Cabin/Lodge/Camp POR1 POR1 POR1 Point of Reception ID: POR1			Residence/Cabin/Lodge/Camp POR4 POR4 POR4 Point of Reception ID: POR4			Residence/Cabin/Lodge/Camp POR5 POR5 POR5 Point of Reception ID: POR5			Residence/Cabin/Lodge/Camp POR6 POR6 POR6 Point of Reception ID: POR6		
		Point of Reception Description: Residence/Cabin/Lodge/Camp			Point of Reception Description: Residence/Cabin/Lodge/Camp			Point of Reception Description: Residence/Cabin/Lodge/Camp			Point of Reception Description: Residence/Cabin/Lodge/Camp		
		Point of reception coordinates			Point of reception coordinates			Point of reception coordinates			Point of reception coordinates		
		X	Y	Z [2]	X	Y	Z [2]	X	Y	Z [2]	X	Y	Z [2]
		456965	5639223	372	451915	5639044	357	451671	5630891	354	465139	5634939	350
		Point of Reception 1			Point of Reception 4			Point of Reception 5			Point of Reception 6		
		Distance [3] (m)	Sound Level at PoR	Units [1] (dBA)	Distance [3] (m)	Sound Level at PoR	Units [1] (dBA)	Distance [3] (m)	Sound Level at PoR	Units [1] (dBA)	Distance [3] (m)	Sound Level at PoR	Units [1] (dBA)
HVAC_Kitchen_out	HVAC_outlet--	5046	-10	dBA	5544	-12	dBA	5014	-10	dBA	10023	-23	dBA
HVAC_Storage_in	HVAC_inlet--	4924	-8	dBA	5499	-10	dBA	5136	-8	dBA	9951	-20	dBA
HVAC_Storage_out	HVAC_outlet--	4924	-10	dBA	5502	-12	dBA	5138	-11	dBA	9948	-23	dBA
HVAC_TreatPlant_in	HVAC_inlet--	4996	-8	dBA	5620	-10	dBA	5108	-8	dBA	9890	-20	dBA
HVAC_TREATPlant_out	HVAC_outlet--	4997	-10	dBA	5623	-12	dBA	5109	-10	dBA	9886	-23	dBA
HVAC_Truck_S_in	HVAC_inlet--	4930	-8	dBA	5568	-10	dBA	5161	-8	dBA	9881	-19	dBA

Notes on Table:
1. dBA = 1-hour energy equivalent sound (Leq (1-hr))
2. Height above local grade 3. MS = Mobile Source

Table A-4b: Closure Phase - Point of Reception Noise Impact

Evening/Nighttime - LAeq,1hr

Project: Great Bear Project
Location: Red Lake, ON

Source ID	Source Description	Residence/Cabin/Lodge/Camp POR1 POR1 POR1 Point of Reception ID: POR1			Residence/Cabin/Lodge/Camp POR4 POR4 POR4 Point of Reception ID: POR4			Residence/Cabin/Lodge/Camp POR5 POR5 POR5 Point of Reception ID: POR5			Residence/Cabin/Lodge/Camp POR6 POR6 POR6 Point of Reception ID: POR6		
		Point of Reception 1			Point of Reception 4			Point of Reception 5			Point of Reception 6		
		Distance [3] (m)	Sound Level at PoR	Units [1] (dBA)	Distance [3] (m)	Sound Level at PoR	Units [1] (dBA)	Distance [3] (m)	Sound Level at PoR	Units [1] (dBA)	Distance [3] (m)	Sound Level at PoR	Units [1] (dBA)
5 MW NaturalGasPower Casing - Powe	5 MW Natural Gas-Fired Reciprocating Engine Casing	2589	20	dBA	5629	9	dBA	7837	4	dBA	8311	3	dBA
5 MW NaturalGasPower Casing - Powe	5 MW Natural Gas-Fired Reciprocating Engine Casing	2594	21	dBA	5636	9	dBA	7836	4	dBA	8306	3	dBA
5 MW NaturalGasPower Casing - Powe	5 MW Natural Gas-Fired Reciprocating Engine Casing	2601	21	dBA	5642	9	dBA	7834	5	dBA	8300	3	dBA
5 MW Gen Exhaust - Power Plant	5 MW Natural Gas-Fired Reciprocating Engine outlet-- Exhaust	2587	15	dBA	5631	5	dBA	7840	1	dBA	8309	1	dBA
5 MW Gen Exhaust - Power Plant	5 MW Natural Gas-Fired Reciprocating Engine outlet-- Exhaust	2593	15	dBA	5637	5	dBA	7838	1	dBA	8304	1	dBA
5 MW Gen Exhaust - Power Plant	5 MW Natural Gas-Fired Reciprocating Engine outlet-- Exhaust	2600	15	dBA	5644	5	dBA	7837	1	dBA	8298	1	dBA
DieselGenset 250 kW Exhaust - Permar	DieselGen_250kW_Ex--Diesel GenSet Exhaust	1893	14	dBA	5591	-1	dBA	8532	-9	dBA	8257	-9	dBA
DieselGenset 250 kW Exhaust - Permar	DieselGen_250kW_Ex--Diesel GenSet Exhaust	1898	14	dBA	5624	-2	dBA	8554	-9	dBA	8223	-8	dBA
CampGenSet_case_closure	DieselGen_250kW_Case--Diesel GenSet Casing	1892	12	dBA	5586	0	dBA	8528	-5	dBA	8261	-5	dBA
CampGenSet_case_closure	DieselGen_250kW_Case--Diesel GenSet Casing	1897	12	dBA	5618	0	dBA	8550	-5	dBA	8229	-5	dBA
Bulldozer_D9	Bulldozer - D9	3024	25	dBA	5432	18	dBA	7236	14	dBA	8676	11	dBA
Bulldozer_D9	Bulldozer - D9	3432	24	dBA	5204	19	dBA	6674	15	dBA	9122	11	dBA
BusPersonnel	Bus (60 seats)--BusPersonnel	MS	7	dBA	MS	-7	dBA	MS	-10	dBA	MS	-15	dBA
BusPersonnel_02	Bus (60 seats)--BusPersonnel	MS	7	dBA	MS	-7	dBA	MS	-11	dBA	MS	-18	dBA
MobileCrane50t	50t Mobile Crane--Tadano GR-500XL	4624	-2	dBA	5056	4	dBA	5317	9	dBA	10141	0	dBA
MobileCrane50t	50t Mobile Crane--Tadano GR-500XL	5036	-9	dBA	5235	10	dBA	4911	10	dBA	10343	-20	dBA
DieselMineTruck	Diesel Mine Truck -- XCMG XDA40	MS	-2	dBA	MS	-2	dBA	MS	0	dBA	MS	-12	dBA
Excavator_small	Excavator--CAT 374	3431	9	dBA	5168	4	dBA	6659	1	dBA	9159	-4	dBA
Excavator_small	Excavator--CAT 374	3232	10	dBA	5392	3	dBA	6989	0	dBA	8814	-3	dBA
Hauling_CAT777_closure	Haul Truck--CAT 777F	MS	16	dBA	MS	13	dBA	MS	14	dBA	MS	8	dBA
Hauling_CAT777_closure	Haul Truck--CAT 777F	MS	12	dBA	MS	11	dBA	MS	13	dBA	MS	5	dBA
Hauling_CAT777_closure	Haul Truck--CAT 777F	MS	10	dBA	MS	10	dBA	MS	12	dBA	MS	1	dBA
HVAC_Camp_in	HVAC_inlet--	1850	7	dBA	5556	-10	dBA	8546	-17	dBA	8291	-16	dBA
HVAC_Camp_in	HVAC_inlet--	1869	6	dBA	5562	-10	dBA	8533	-17	dBA	8285	-16	dBA
HVAC_Camp_in	HVAC_inlet--	1859	7	dBA	5612	-10	dBA	8585	-17	dBA	8235	-16	dBA
HVAC_Camp_in	HVAC_inlet--	1878	6	dBA	5618	-10	dBA	8571	-17	dBA	8229	-16	dBA
HVAC_Camp_out	HVAC_outlet--	1850	4	dBA	5554	-12	dBA	8545	-20	dBA	8293	-19	dBA
HVAC_Camp_out	HVAC_outlet--	1868	4	dBA	5560	-12	dBA	8531	-20	dBA	8287	-19	dBA
HVAC_Camp_out	HVAC_outlet--	1858	4	dBA	5610	-12	dBA	8584	-20	dBA	8237	-19	dBA
HVAC_Camp_out	HVAC_outlet--	1877	4	dBA	5616	-12	dBA	8570	-20	dBA	8231	-19	dBA
HVAC_MineAdmin_in	HVAC_inlet--	4364	-6	dBA	4947	-8	dBA	5572	-10	dBA	10031	-20	dBA
HVAC_mineAdmin_out	HVAC_outlet--	4365	-8	dBA	4951	-10	dBA	5572	-12	dBA	10028	-23	dBA
Loader_CAT992	Loader CAT 992	5068	-3	dBA	7043	-7	dBA	6244	0	dBA	8195	-10	dBA
Loader_CAT992	Loader CAT 992	5325	0	dBA	7578	10	dBA	6582	7	dBA	7706	-9	dBA
LoaderSmall_CAT966	Front End Loader (smaller)--CAT 966	5104	7	dBA	5270	13	dBA	4845	14	dBA	10374	5	dBA
LoaderSmall_CAT966	Front End Loader (smaller)--CAT 966	3258	19	dBA	5447	13	dBA	6993	10	dBA	8767	6	dBA
Pickups_F150	Pick-up--F150	MS	7	dBA	MS	-7	dBA	MS	-11	dBA	MS	-15	dBA
Pickups_F150_02	Pick-up--F150	MS	7	dBA	MS	-8	dBA	MS	-12	dBA	MS	-19	dBA
RoadGrader_CAT16_01_pp	Road Grader--CAT 16	MS	15	dBA	MS	2	dBA	MS	-2	dBA	MS	-5	dBA
RoadGrader_CAT16_02_pp	Road Grader--CAT 16	MS	5	dBA	MS	1	dBA	MS	1	dBA	MS	-8	dBA
HVAC_Admin_in	HVAC_inlet--	5009	-8	dBA	5503	-10	dBA	5039	-8	dBA	10030	-20	dBA
HVAC_Admin_out	HVAC_outlet--	5009	-10	dBA	5506	-12	dBA	5040	-10	dBA	10027	-23	dBA
HVAC_CAMP_A_in	HVAC_inlet--	5065	-8	dBA	5502	-10	dBA	4973	-8	dBA	10087	-20	dBA
HVAC_CAMP_A_out	HVAC_outlet--	5068	-10	dBA	5503	-12	dBA	4971	-10	dBA	10089	-23	dBA
HVAC_CAMP_B_in	HVAC_inlet--	5067	-8	dBA	5519	-10	dBA	4978	-8	dBA	10071	-20	dBA
HVAC_CAMP_B_out	HVAC_outlet--	5069	-10	dBA	5520	-12	dBA	4976	-10	dBA	10071	-23	dBA
HVAC_CAMP_C_in	HVAC_inlet--	5067	-8	dBA	5533	-10	dBA	4984	-8	dBA	10055	-20	dBA
HVAC_CAMP_C_out	HVAC_outlet--	5070	-10	dBA	5535	-12	dBA	4982	-10	dBA	10056	-23	dBA
HVAC_Kitchen_in	HVAC_inlet--	5046	-8	dBA	5541	-10	dBA	5013	-8	dBA	10026	-20	dBA

Point of Reception Description: Residence/Cabin/Lodge/Camp
Point of reception coordinates

POR1 X	POR1 Y	POR1 Z [2]	POR4 X	POR4 Y	POR4 Z [2]	POR5 X	POR5 Y	POR5 Z [2]	POR6 X	POR6 Y	POR6 Z [2]
456965	5639223	372	451915	5639044	357	451671	5630891	354	465139	5634939	350

Notes on Table:
1. dBA = 1-hour energy equivalent sound (Leq (1-hr))
2. Height above local grade 3. MS = Mobile Source

Table A-4b: Closure Phase - Point of Reception Noise Impact

Evening/Nighttime - LAeq,1hr

Project: Great Bear Project
Location: Red Lake, ON

			Residence/Cabin/Lodge/Camp			Residence/Cabin/Lodge/Camp			Residence/Cabin/Lodge/Camp			Residence/Cabin/Lodge/Camp		
			POR1	POR1	POR1	POR4	POR4	POR4	POR5	POR5	POR5	POR6	POR6	POR6
			Point of Reception ID			**Point of Reception ID**			**Point of Reception ID**			**Point of Reception ID**		
			POR1			**POR4**			**POR5**			**POR6**		
			Point of Reception Description			**Point of Reception Description**			**Point of Reception Description**			**Point of Reception Description**		
			Residence/Cabin/Lodge/Camp			**Residence/Cabin/Lodge/Camp**			**Residence/Cabin/Lodge/Camp**			**Residence/Cabin/Lodge/Camp**		
			Point of reception coordinates			**Point of reception coordinates**			**Point of reception coordinates**			**Point of reception coordinates**		
			X	**Y**	**Z [2]**	**X**	**Y**	**Z [2]**	**X**	**Y**	**Z [2]**	**X**	**Y**	**Z [2]**
			456965	5639223	372	451915	5639044	357	451671	5630891	354	465139	5634939	350
Source ID	**Source Description**	**Point of Reception 1**			**Point of Reception 4**			**Point of Reception 5**			**Point of Reception 6**		
		Distance [3] (m)	**Sound Level at PoR**	**Units [1] (dBA)**	**Distance [3] (m)**	**Sound Level at PoR**	**Units [1] (dBA)**	**Distance [3] (m)**	**Sound Level at PoR**	**Units [1] (dBA)**	**Distance [3] (m)**	**Sound Level at PoR**	**Units [1] (dBA)**
HVAC_Kitchen_out	HVAC_outlet--	5046	-10	dBA	5544	-12	dBA	5014	-10	dBA	10023	-23	dBA
HVAC_Storage_in	HVAC_inlet--	4924	-8	dBA	5499	-10	dBA	5136	-8	dBA	9951	-20	dBA
HVAC_Storage_out	HVAC_outlet--	4924	-10	dBA	5502	-12	dBA	5138	-11	dBA	9948	-23	dBA
HVAC_TreatPlant_in	HVAC_inlet--	4996	-8	dBA	5620	-10	dBA	5108	-8	dBA	9890	-20	dBA
HVAC_TREATPlant_out	HVAC_outlet--	4997	-10	dBA	5623	-12	dBA	5109	-10	dBA	9886	-23	dBA
HVAC_Truck_S_in	HVAC_inlet--	4930	-8	dBA	5568	-10	dBA	5161	-8	dBA	9881	-19	dBA

Notes on Table:
1. dBA = 1-hour energy equivalent sound (Leq (1-hr))
2. Height above local grade 3. MS = Mobile Source

Table A-4c: Emergency Test for Closure Phase - Noise Source Summary

Project: Great Bear Project
Location: Red Lake, ON

Source ID [1]	Source Description	Source Location NAD 83 / UTM zone 15N		Sound Power Level [3]	Sound Power Level Adjustment [3]	Source Location [4]	Sound Characteristics [5]	Noise Control Measures [6]
		Latitude [2]	Longitude [2]					
		(m)	(m)	(dBA)	(+dB)	(I or O)	(S,Q,I,B,T,C)	(S,A,B,L,E,O,U)
Power5MW_NaturalGas_cas	5 MW Natural Gas-Fired Reciprocating Engine Casing	457036	5636622	127	0	O	S	E
Pwr5MW_NaturalGas_ex	5 MW Natural Gas-Fired Reciprocating Engine outlet-- Exhaust	457038	5636620	112	0	O	S	S
Ambulance	Bus (60 seats)--BusPersonnel	454729	5634386	92	0	O	S	U
FireTruck	Pick-up--F150	454657	5634289	98	0	O	S	U

Notes on Table:

1. Wherever possible, the Source ID matches the identifiers used in the ESDM report.
2. Source centre of gravity coordinates used for Line and Area sources. Vertical area source coordinates not provided since corresponding area source coordinates are provided.
3. Sound Power Level of Source, in dBA, including sound characteristic adjustments per NPC-104.
4. Source Location: O = Outside of building, including the roof, I = Inside of building
5. Sound Characteristic, per NPC-104
   S = Steady
   Q = Quasi-Steady Impulsive
   I = Impulsive
   B = Buzzing
   T = Tonal
   C = Cyclic
6. Noise Control Measures Included
   S = Silencer/Muffler
   A = Acoustic lining, plenum
   B = Barrier
   L = Lagging
   E = acoustic enclosure
   O = Other
   U = uncontrolled

Table A-4d: Emergency Test for Closure Phase - Noise Source Summary

Daytime - LAeq,1hr

Project: Great Bear Project
Location: Red Lake, ON

Source ID	Source Description	Residence/Cabin/Lodge/Camp POR1 POR1 POR1 Point of Reception ID POR1			Residence/Cabin/Lodge/Camp POR4 POR4 POR4 Point of Reception ID POR4			Residence/Cabin/Lodge/Camp POR5 POR5 POR5 Point of Reception ID POR5			Residence/Cabin/Lodge/Camp POR6 POR6 POR6 Point of Reception ID POR6		
		Point of Reception 1			Point of Reception 4			Point of Reception 5			Point of Reception 6		
		Distance [3] (m)	Sound Level at PoR	Units [1] (dBA)	Distance [3] (m)	Sound Level at PoR	Units [1] (dBA)	Distance [3] (m)	Sound Level at PoR	Units [1] (dBA)	Distance [3] (m)	Sound Level at PoR	Units [1] (dBA)
Ambulance	Bus (60 seats)--BusPersonnel	MS	1	dBA	MS	-14	dBA	MS	-17	dBA	MS	-24	dBA
FireTruck	Pick-up--F150	MS	7	dBA	MS	-8	dBA	MS	-12	dBA	MS	-19	dBA
Power5MW_NaturalGas_case	5 MW Natural Gas-Fired Reciprocating Engine Casing	2602	28	dBA	5665	17	dBA	7851	12	dBA	8276	11	dBA
Pwr5MW_NaturalGas_ex	5 MW Natural Gas-Fired Reciprocating Engine outlet-- Exhaust	2604	18	dBA	5668	6	dBA	7851	1	dBA	8274	0	dBA

Point of Reception Description	Residence/Cabin/Lodge/Camp			Residence/Cabin/Lodge/Camp			Residence/Cabin/Lodge/Camp			Residence/Cabin/Lodge/Camp		
Point of reception coordinates	X	Y	Z [2]	X	Y	Z [2]	X	Y	Z [2]	X	Y	Z [2]
	456965	5639223	372	451915	5639044	357	451671	5630891	354	465139	5634939	350

Notes on Table:
1. dBA = 1-hour energy equivalent sound (Leq (1-hr))
2. Height above local grade 3. MS = Mobile Source

Table A-5a: Change in %HA

Project: Great Bear Resources Ltd.
Location: Red Lake, Ontario

Construction											
Name	POR	Baseline Ldn (dBA)	%HA	Level					LRdn Combined	Combined %HA	Change in %HA
				Ld (dBA)	Ln (dBA)	Ldn (dBA)	LRdn calc	%HA			
Residence/Cabin/Lodge/Camp	POR1	40	**0.6**	41.9	37.8	44.8	51	2.5	51	2.6	**2.0**
Residence/Cabin/Lodge/Camp	POR2	40	**0.6**	32.3	30.3	36.7	42	0.7	44	1.0	**0.4**
Residence/Cabin/Lodge/Camp	POR3	40	**0.6**	32.9	31.0	37.4	42	0.8	44	1.1	**0.5**
Residence/Cabin/Lodge/Camp	POR4	39	**0.5**	41.8	32.5	42.0	50	2.3	51	2.4	**1.9**
Residence/Cabin/Lodge/Camp	POR5	37	**0.4**	38.2	33.6	40.8	47	1.5	48	1.6	**1.2**
Residence/Cabin/Lodge/Camp	POR6	39	**0.5**	33.0	31.0	37.4	42	0.8	44	1.0	**0.5**
Residence/Cabin/Lodge/Camp	POR7	39	**0.5**	29.6	27.6	34.0	39	0.5	42	0.8	**0.3**
Residence/Cabin/Lodge/Camp	POR8	39	**0.5**	34.4	26.3	35.1	43	0.9	44	1.1	**0.6**
Residence/Cabin/Lodge/Camp	POR9	39	**0.5**	40.3	31.5	40.7	49	1.9	49	2.0	**1.5**
Residence/Cabin/Lodge/Camp	POR10	40	**0.6**	39.0	31.6	40.1	48	1.6	48	1.8	**1.2**
Residence/Cabin/Lodge/Camp	POR11	40	**0.6**	39.1	36.0	42.8	48	1.8	49	1.9	**1.3**
Residence/Cabin/Lodge/Camp	POR12	39	**0.5**	33.3	27.0	34.9	42	0.8	44	1.0	**0.5**
Residence/Cabin/Lodge/Camp	POR13	39	**0.5**	31.0	24.4	32.5	40	0.6	42	0.8	**0.3**
Residence/Cabin/Lodge/Camp	POR14	39	**0.5**	29.9	23.2	31.3	39	0.5	42	0.8	**0.3**
Residence/Cabin/Lodge/Camp	POR15	39	**0.5**	29.1	22.6	30.6	38	0.4	41	0.7	**0.2**
Residence/Cabin/Lodge/Camp	POR16	39	**0.5**	27.2	21.2	28.9	36	0.3	41	0.7	**0.2**
Commercial	POR17	39	**0.5**	25.4	19.4	27.2	34	0.3	40	0.6	**0.1**
Residence/Cabin/Lodge/Camp	POR18	39	**0.5**	32.2	30.2	36.7	42	0.7	44	0.9	**0.4**
Empty Lot, Non-mining Land Area	POR19	38	**0.5**	29.8	23.2	31.3	38	0.5	41	0.7	**0.2**
Residence/Cabin/Lodge/Camp	POR20	39	**0.5**	30.8	24.1	32.2	39	0.6	42	0.8	**0.3**
Commercial	POR21	39	**0.5**	36.6	28.2	37.2	45	1.2	46	1.3	**0.8**
Residence/Cabin/Lodge/Camp	POR22	40	**0.6**	25.9	23.4	30.0	35	0.3	41	0.7	**0.1**
Residence/Cabin/Lodge/Camp	POR23	37	**0.4**	24.1	20.8	27.5	33	0.2	38	0.5	**0.1**
Residence/Cabin/Lodge/Camp	POR24	39	**0.5**	25.0	22.6	29.1	34	0.3	40	0.6	**0.1**
Residence/Cabin/Lodge/Camp	POR25	37	**0.4**	19.3	15.6	22.5	28	0.1	38	0.4	**0.0**
Residence/Cabin/Lodge/Camp	POR26	39	**0.5**	29.1	27.2	33.6	39	0.5	42	0.8	**0.3**
Residence/Cabin/Lodge/Camp	POR27	37	**0.4**	24.0	21.1	27.7	33	0.2	39	0.5	**0.1**
Residence/Cabin/Lodge/Camp	POR28	39	**0.5**	33.3	31.4	37.8	43	0.9	44	1.0	**0.5**
Residence/Cabin/Lodge/Camp	POR29	39	**0.5**	29.0	22.7	30.6	38	0.4	41	0.7	**0.2**

Table A-5b: Change in %HA

Peak Production											
Name	POR	Baseline Ldn (dBA)	%HA	Level					LRdn Combined	Combined %HA	Change in %HA
				Ld (dBA)	Ln (dBA)	Ldn (dBA)	LRdn calc	%HA			
Residence/Cabin/Lodge/Camp	POR1	40	**0.6**	40.5	39.4	45.7	50	2.2	51	2.4	**1.8**
Residence/Cabin/Lodge/Camp	POR2	40	**0.6**	31.1	30.6	36.7	41	0.7	44	1	**0.4**
Residence/Cabin/Lodge/Camp	POR3	40	**0.6**	31.5	31.0	37.1	41	0.7	44	1	**0.4**
Residence/Cabin/Lodge/Camp	POR4	39	**0.5**	40.6	36.3	43.4	50	2.1	50	2.2	**1.7**
Residence/Cabin/Lodge/Camp	POR5	37	**0.4**	37.8	36.6	42.9	47	1.6	48	1.6	**1.2**
Residence/Cabin/Lodge/Camp	POR6	39	**0.5**	31.6	31.1	37.2	41	0.7	43	0.9	**0.4**
Residence/Cabin/Lodge/Camp	POR7	39	**0.5**	28.7	28.3	34.4	39	0.5	42	0.7	**0.2**
Residence/Cabin/Lodge/Camp	POR8	39	**0.5**	33.7	30.5	37.2	43	0.9	44	1.1	**0.6**
Residence/Cabin/Lodge/Camp	POR9	39	**0.5**	39.3	35.3	42.3	48	1.8	49	1.9	**1.4**
Residence/Cabin/Lodge/Camp	POR10	40	**0.6**	38.3	35.3	41.9	48	1.6	48	1.7	**1.1**
Residence/Cabin/Lodge/Camp	POR11	40	**0.6**	38.1	37.2	43.4	48	1.7	49	1.8	**1.2**
Residence/Cabin/Lodge/Camp	POR12	39	**0.5**	33.0	30.9	37.3	42	0.8	44	1	**0.5**
Residence/Cabin/Lodge/Camp	POR13	39	**0.5**	30.6	28.4	34.9	40	0.6	43	0.8	**0.3**
Residence/Cabin/Lodge/Camp	POR14	39	**0.5**	29.8	27.8	34.2	39	0.5	42	0.8	**0.3**
Residence/Cabin/Lodge/Camp	POR15	39	**0.5**	29.0	27.0	33.4	38	0.5	42	0.7	**0.2**
Residence/Cabin/Lodge/Camp	POR16	39	**0.5**	26.8	25.0	31.4	36	0.4	41	0.7	**0.2**
Commercial	POR17	39	**0.5**	25.4	23.8	30.1	35	0.3	40	0.6	**0.1**
Residence/Cabin/Lodge/Camp	POR18	39	**0.5**	30.9	30.3	36.4	41	0.7	43	0.9	**0.4**
Empty Lot, Non-mining Land Area	POR19	38	**0.5**	29.6	27.5	33.9	39	0.5	42	0.7	**0.2**
Residence/Cabin/Lodge/Camp	POR20	39	**0.5**	30.4	28.2	34.7	40	0.6	42	0.8	**0.3**
Commercial	POR21	39	**0.5**	36.0	32.6	39.4	45	1.2	46	1.3	**0.8**
Residence/Cabin/Lodge/Camp	POR22	40	**0.6**	25.8	25.4	31.5	36	0.3	42	0.7	**0.1**
Residence/Cabin/Lodge/Camp	POR23	37	**0.4**	24.5	24.1	30.2	34	0.3	39	0.5	**0.1**
Residence/Cabin/Lodge/Camp	POR24	39	**0.5**	24.0	23.5	29.6	34	0.3	40	0.6	**0.1**
Residence/Cabin/Lodge/Camp	POR25	37	**0.4**	19.8	19.1	25.2	30	0.2	38	0.4	**0**
Residence/Cabin/Lodge/Camp	POR26	39	**0.5**	28.0	27.6	33.7	38	0.4	41	0.7	**0.2**
Residence/Cabin/Lodge/Camp	POR27	37	**0.4**	24.5	24.1	30.2	34	0.3	39	0.5	**0.1**
Residence/Cabin/Lodge/Camp	POR28	39	**0.5**	32.0	31.6	37.7	42	0.8	44	1	**0.5**
Residence/Cabin/Lodge/Camp	POR29	39	**0.5**	28.9	27.1	33.5	38	0.5	42	0.7	**0.2**

Note:

Arithmetic average of day-night sound levels measured during leaves-off and leaves-on programs.

Table A-5c: Change in %HA

Project: Great Bear Resources Ltd.
Location: Red Lake, Ontario

Underground prodiction											
Name	POR	Baseline Ldn (dBA)	%HA	Level					LRdn Combined	Combined %HA	Change in %HA
				Ld (dBA)	Ln (dBA)	Ldn (dBA)	LRdn calc	%HA			
Residence/Cabin/Lodge/Camp	POR1	40	**0.6**	42.6	39.8	46.4	52	2.8	52	2.9	**2.3**
Residence/Cabin/Lodge/Camp	POR2	40	**0.6**	31.8	30.0	36.4	41	0.7	44	1	**0.4**
Residence/Cabin/Lodge/Camp	POR3	40	**0.6**	32.1	30.3	36.7	42	0.7	44	1	**0.4**
Residence/Cabin/Lodge/Camp	POR4	39	**0.5**	42.5	35.7	43.9	51	2.5	51	2.6	**2.1**
Residence/Cabin/Lodge/Camp	POR5	37	**0.4**	39.5	36.3	43.0	49	1.8	49	1.9	**1.5**
Residence/Cabin/Lodge/Camp	POR6	39	**0.5**	32.3	30.7	37.0	42	0.8	44	0.9	**0.4**
Residence/Cabin/Lodge/Camp	POR7	39	**0.5**	28.4	26.5	32.9	38	0.4	41	0.7	**0.2**
Residence/Cabin/Lodge/Camp	POR8	39	**0.5**	35.2	29.9	37.3	44	1	45	1.2	**0.7**
Residence/Cabin/Lodge/Camp	POR9	39	**0.5**	41.0	34.5	42.5	50	2.1	50	2.2	**1.7**
Residence/Cabin/Lodge/Camp	POR10	40	**0.6**	39.9	34.2	41.9	49	1.8	49	2	**1.4**
Residence/Cabin/Lodge/Camp	POR11	40	**0.6**	39.7	37.2	43.7	49	1.9	50	2.1	**1.5**
Residence/Cabin/Lodge/Camp	POR12	39	**0.5**	34.2	29.8	36.9	43	0.9	45	1.1	**0.6**
Residence/Cabin/Lodge/Camp	POR13	39	**0.5**	31.6	27.0	34.2	41	0.6	43	0.9	**0.4**
Residence/Cabin/Lodge/Camp	POR14	39	**0.5**	30.6	26.5	33.6	40	0.6	42	0.8	**0.3**
Residence/Cabin/Lodge/Camp	POR15	39	**0.5**	29.8	25.7	32.7	39	0.5	42	0.8	**0.3**
Residence/Cabin/Lodge/Camp	POR16	39	**0.5**	27.7	23.7	30.7	37	0.4	41	0.7	**0.2**
Commercial	POR17	39	**0.5**	25.9	22.2	29.1	35	0.3	40	0.6	**0.1**
Residence/Cabin/Lodge/Camp	POR18	39	**0.5**	31.6	29.9	36.2	41	0.7	43	0.9	**0.4**
Empty Lot, Non-mining Land Area	POR19	38	**0.5**	30.4	26.1	33.2	39	0.5	42	0.8	**0.3**
Residence/Cabin/Lodge/Camp	POR20	39	**0.5**	31.3	26.8	34.0	40	0.6	43	0.8	**0.3**
Commercial	POR21	39	**0.5**	37.1	31.6	39.2	46	1.3	47	1.4	**0.9**
Residence/Cabin/Lodge/Camp	POR22	40	**0.6**	25.1	23.2	29.6	35	0.3	41	0.7	**0.1**
Residence/Cabin/Lodge/Camp	POR23	37	**0.4**	23.8	21.8	28.2	33	0.2	38	0.5	**0.1**
Residence/Cabin/Lodge/Camp	POR24	39	**0.5**	24.2	22.3	28.7	34	0.3	40	0.6	**0.1**
Residence/Cabin/Lodge/Camp	POR25	37	**0.4**	19.3	17.2	23.6	29	0.1	38	0.4	**0**
Residence/Cabin/Lodge/Camp	POR26	39	**0.5**	28.2	26.2	32.7	38	0.4	41	0.7	**0.2**
Residence/Cabin/Lodge/Camp	POR27	37	**0.4**	23.9	22.3	28.6	33	0.3	39	0.5	**0.1**
Residence/Cabin/Lodge/Camp	POR28	39	**0.5**	32.7	31.1	37.4	42	0.8	44	1	**0.5**
Residence/Cabin/Lodge/Camp	POR29	39	**0.5**	29.7	25.8	32.8	39	0.5	42	0.8	**0.3**

Table A-5d: Change in %HA

Closure											
Name	POR	Baseline Ldn (dBA)	%HA	Level					LRdn Combined	Combined %HA	Change in %HA
				Ld (dBA)	Ln (dBA)	Ldn (dBA)	LRdn calc	%HA			
Residence/Cabin/Lodge/Camp	POR1	40	**0.6**	31.1	31.1	37.2	41.1	0.7	44	1	**0.4**
Residence/Cabin/Lodge/Camp	POR2	40	**0.6**	17.0	17.0	23.1	27	0.1	40	0.6	**0**
Residence/Cabin/Lodge/Camp	POR3	40	**0.6**	17.3	17.3	23.4	27.3	0.1	40	0.6	**0**
Residence/Cabin/Lodge/Camp	POR4	39	**0.5**	24.6	24.6	30.6	34.6	0.3	40	0.6	**0.1**
Residence/Cabin/Lodge/Camp	POR5	37	**0.4**	23.0	23.0	29.0	33	0.2	38	0.5	**0.1**
Residence/Cabin/Lodge/Camp	POR6	39	**0.5**	17.5	17.5	23.6	27.5	0.1	39	0.5	**0**
Residence/Cabin/Lodge/Camp	POR7	39	**0.5**	14.1	14.1	20.2	24.1	0.1	39	0.5	**0**
Residence/Cabin/Lodge/Camp	POR8	39	**0.5**	17.8	17.8	23.9	27.8	0.1	39	0.5	**0**
Residence/Cabin/Lodge/Camp	POR9	39	**0.5**	23.2	23.2	29.2	33.2	0.2	40	0.6	**0.1**
Residence/Cabin/Lodge/Camp	POR10	40	**0.6**	23.7	23.7	29.7	33.7	0.3	41	0.7	**0.1**
Residence/Cabin/Lodge/Camp	POR11	40	**0.6**	26.8	26.8	32.8	36.8	0.4	42	0.8	**0.2**
Residence/Cabin/Lodge/Camp	POR12	39	**0.5**	18.6	18.6	24.6	28.6	0.1	39	0.5	**0**
Residence/Cabin/Lodge/Camp	POR13	39	**0.5**	15.8	15.8	21.8	25.8	0.1	39	0.5	**0**
Residence/Cabin/Lodge/Camp	POR14	39	**0.5**	14.7	14.7	20.7	24.7	0.1	39	0.5	**0**
Residence/Cabin/Lodge/Camp	POR15	39	**0.5**	14.2	14.2	20.2	24.2	0.1	39	0.5	**0**
Residence/Cabin/Lodge/Camp	POR16	39	**0.5**	12.6	12.6	18.6	22.6	0.1	39	0.5	**0**
Commercial	POR17	39	**0.5**	10.9	10.9	16.9	20.9	0	39	0.5	**0**
Residence/Cabin/Lodge/Camp	POR18	39	**0.5**	16.8	16.8	22.8	26.8	0.1	39	0.5	**0**
Empty Lot, Non-mining Land Area	POR19	38	**0.5**	14.7	14.7	20.7	24.7	0.1	38	0.5	**0**
Residence/Cabin/Lodge/Camp	POR20	39	**0.5**	15.7	15.7	21.7	25.7	0.1	39	0.5	**0**
Commercial	POR21	39	**0.5**	19.7	19.7	25.7	29.7	0.2	39	0.6	**0.1**
Residence/Cabin/Lodge/Camp	POR22	40	**0.6**	10.9	10.9	16.9	20.9	0	40	0.6	**0**
Residence/Cabin/Lodge/Camp	POR23	37	**0.4**	9.2	9.2	15.2	19.2	0	37	0.4	**0**
Residence/Cabin/Lodge/Camp	POR24	39	**0.5**	9.6	9.6	15.6	19.6	0	39	0.5	**0**
Residence/Cabin/Lodge/Camp	POR25	37	**0.4**	4.7	4.7	10.7	14.7	0	37	0.4	**0**
Residence/Cabin/Lodge/Camp	POR26	39	**0.5**	13.7	13.7	19.7	23.7	0.1	39	0.5	**0**
Residence/Cabin/Lodge/Camp	POR27	37	**0.4**	9.0	9.0	15.0	19	0	37	0.4	**0**
Residence/Cabin/Lodge/Camp	POR28	39	**0.5**	17.5	17.5	23.6	27.5	0.1	39	0.5	**0**
Residence/Cabin/Lodge/Camp	POR29	39	**0.5**	14.2	14.2	20.2	24.2	0.1	39	0.5	**0**

Note:

Arithmetic average of day-night sound levels measured during leaves-off and leaves-on programs.

Table A-5e: Noise Modelling Results - Provincial Assessment Framework

POR	Period	Predicted Sound Levels ($L_{Aeq-1hr}$)				NPC-300 Criteria	Compliant [Y/N]			
		C	P-P	U-P	CI		C	P-P	U-P	CI
POR1	Day	43	41	43	31	45 dBA	Y	Y	Y	Y
POR1	Evening/Night	38	39	40	31	40 dBA	Y	Y	Y	Y
POR1	Impulsive	21	-	-	-	45 dBAI	Y	-	-	-
POR1	Testing	18	36	36	28	50 dBA	Y	Y	Y	Y
POR2	Day	33	31	32	17	45 dBA	Y	Y	Y	Y
POR2	Evening/Night	30	31	30	17	40 dBA	Y	Y	Y	Y
POR2	Impulsive	7	-	-	-	45 dBAI	Y	-	-	-
POR2	Testing	0	17	17	10	50 dBA	Y	Y	Y	Y
POR3	Day	33	32	33	17	45 dBA	Y	Y	Y	Y
POR3	Evening/Night	31	31	30	17	40 dBA	Y	Y	Y	Y
POR3	Impulsive	7	-	-	-	45 dBAI	Y	-	-	-
POR3	Testing	1	17	17	11	50 dBA	Y	Y	Y	Y
POR4	Day	43	42	44	25	45 dBA	Y	Y	Y	Y
POR4	Evening/Night	33	36	36	25	40 dBA	Y	Y	Y	Y
POR4	Impulsive	44	-	-	-	45 dBAI	Y	-	-	-
POR4	Testing	9	24	24	17	50 dBA	Y	Y	Y	Y
POR5	Day	39	38	40	23	45 dBA	Y	Y	Y	Y
POR5	Evening/Night	34	37	36	23	40 dBA	Y	Y	Y	Y
POR5	Impulsive	24	-	-	-	45 dBAI	Y	-	-	-
POR5	Testing	9	18	18	12	50 dBA	Y	Y	Y	Y
POR6	Day	34	32	33	18	45 dBA	Y	Y	Y	Y
POR6	Evening/Night	31	31	31	18	40 dBA	Y	Y	Y	Y
POR6	Impulsive	8	-	-	-	45 dBAI	Y	-	-	-
POR6	Testing	1	18	18	11	50 dBA	Y	Y	Y	Y
POR7	Day	30	29	29	14	45 dBA	Y	Y	Y	Y
POR7	Evening/Night	28	28	27	14	40 dBA	Y	Y	Y	Y
POR7	Impulsive	0	-	-	-	45 dBAI	Y	-	-	-

POR7	Testing	-3	11	11	6	50 dBA	Y	Y	Y	Y
POR8	Day	36	35	36	18	45 dBA	Y	Y	Y	Y
POR8	Evening/Night	26	31	30	18	40 dBA	Y	Y	Y	Y
POR8	Impulsive	29	-	-	-	45 dBAI	Y	-	-	-
POR8	Testing	3	15	15	9	50 dBA	Y	Y	Y	Y
POR9	Day	41	40	42	23	45 dBA	Y	Y	Y	Y
POR9	Evening/Night	31	35	35	23	40 dBA	Y	Y	Y	Y
POR9	Impulsive	41	-	-	-	45 dBAI	Y	-	-	-
POR9	Testing	8	22	22	15	50 dBA	Y	Y	Y	Y
POR10	Day	40	39	41	24	45 dBA	Y	Y	Y	Y
POR10	Evening/Night	32	35	34	24	40 dBA	Y	Y	Y	Y
POR10	Impulsive	39	-	-	-	45 dBAI	Y	-	-	-
POR10	Testing	8	23	23	17	50 dBA	Y	Y	Y	Y
POR11	Day	40	38	40	27	45 dBA	Y	Y	Y	Y
POR11	Evening/Night	36	37	37	27	40 dBA	Y	Y	Y	Y
POR11	Impulsive	25	-	-	-	45 dBAI	Y	-	-	-
POR11	Testing	13	32	32	23	50 dBA	Y	Y	Y	Y
POR12	Day	34	34	35	19	45 dBA	Y	Y	Y	Y
POR12	Evening/Night	27	31	30	19	40 dBA	Y	Y	Y	Y
POR12	Impulsive	28	-	-	-	45 dBAI	Y	-	-	-
POR12	Testing	2	18	18	11	50 dBA	Y	Y	Y	Y
POR13	Day	32	31	33	16	45 dBA	Y	Y	Y	Y
POR13	Evening/Night	24	28	27	16	40 dBA	Y	Y	Y	Y
POR13	Impulsive	24	-	-	-	45 dBAI	Y	-	-	-
POR13	Testing	0	13	13	7	50 dBA	Y	Y	Y	Y
POR14	Day	31	30	31	15	45 dBA	Y	Y	Y	Y
POR14	Evening/Night	23	28	27	15	40 dBA	Y	Y	Y	Y
POR14	Impulsive	21	-	-	-	45 dBAI	Y	-	-	-
POR14	Testing	-1	11	11	6	50 dBA	Y	Y	Y	Y
POR15	Day	30	30	31	14	45 dBA	Y	Y	Y	Y
POR15	Evening/Night	23	27	26	14	40 dBA	Y	Y	Y	Y

POR15	Impulsive	19	-	-	-	45 dBAI	Y	-	-	-
POR15	Testing	-2	11	11	5	50 dBA	Y	Y	Y	Y
POR16	Day	28	27	29	13	45 dBA	Y	Y	Y	Y
POR16	Evening/Night	21	25	24	13	40 dBA	Y	Y	Y	Y
POR16	Impulsive	15	-	-	-	45 dBAI	Y	-	-	-
POR16	Testing	-4	10	10	4	50 dBA	Y	Y	Y	Y
POR17	Day	26	26	27	11	45 dBA	Y	Y	Y	Y
POR17	Evening/Night	19	24	22	11	40 dBA	Y	Y	Y	Y
POR17	Impulsive	11	-	-	-	45 dBAI	Y	-	-	-
POR17	Testing	-5	7	7	2	50 dBA	Y	Y	Y	Y
POR18	Day	33	31	32	17	45 dBA	Y	Y	Y	Y
POR18	Evening/Night	30	30	30	17	40 dBA	Y	Y	Y	Y
POR18	Impulsive	7	-	-	-	45 dBAI	Y	-	-	-
POR18	Testing	1	18	18	11	50 dBA	Y	Y	Y	Y
POR19	Day	31	30	31	15	45 dBA	Y	Y	Y	Y
POR19	Evening/Night	23	28	26	15	40 dBA	Y	Y	Y	Y
POR19	Impulsive	21	-	-	-	45 dBAI	Y	-	-	-
POR19	Testing	-1	12	12	6	50 dBA	Y	Y	Y	Y
POR20	Day	32	31	32	16	45 dBA	Y	Y	Y	Y
POR20	Evening/Night	24	28	27	16	40 dBA	Y	Y	Y	Y
POR20	Impulsive	23	-	-	-	45 dBAI	Y	-	-	-
POR20	Testing	-1	13	13	7	50 dBA	Y	Y	Y	Y
POR21	Day	38	37	38	20	45 dBA	Y	Y	Y	Y
POR21	Evening/Night	28	33	32	20	40 dBA	Y	Y	Y	Y
POR21	Impulsive	30	-	-	-	45 dBAI	Y	-	-	-
POR21	Testing	4	16	16	10	50 dBA	Y	Y	Y	Y
POR22	Day	26	26	26	11	45 dBA	Y	Y	Y	Y
POR22	Evening/Night	23	25	23	11	40 dBA	Y	Y	Y	Y
POR22	Impulsive	-8	-	-	-	45 dBAI	Y	-	-	-
POR22	Testing	-6	7	7	2	50 dBA	Y	Y	Y	Y
POR23	Day	25	25	24	9	45 dBA	Y	Y	Y	Y

POR23	Evening/Night	21	24	22	9	40 dBA	Y	Y	Y	Y
POR23	Impulsive	-14	-	-	-	45 dBAI	Y	-	-	-
POR23	Testing	-9	3	3	-1	50 dBA	Y	Y	Y	Y
POR24	Day	26	24	25	10	45 dBA	Y	Y	Y	Y
POR24	Evening/Night	23	24	22	10	40 dBA	Y	Y	Y	Y
POR24	Impulsive	-8	-	-	-	45 dBAI	Y	-	-	-
POR24	Testing	-7	7	7	2	50 dBA	Y	Y	Y	Y
POR25	Day	20	20	20	5	45 dBA	Y	Y	Y	Y
POR25	Evening/Night	16	19	17	5	40 dBA	Y	Y	Y	Y
POR25	Impulsive	-23	-	-	-	45 dBAI	Y	-	-	-
POR25	Testing	-12	-3	-3	-5	50 dBA	Y	Y	Y	Y
POR26	Day	30	28	29	14	45 dBA	Y	Y	Y	Y
POR26	Evening/Night	27	28	26	14	40 dBA	Y	Y	Y	Y
POR26	Impulsive	-1	-	-	-	45 dBAI	Y	-	-	-
POR26	Testing	-3	12	12	6	50 dBA	Y	Y	Y	Y
POR27	Day	25	25	24	9	45 dBA	Y	Y	Y	Y
POR27	Evening/Night	21	24	22	9	40 dBA	Y	Y	Y	Y
POR27	Impulsive	-14	-	-	-	45 dBAI	Y	-	-	-
POR27	Testing	-9	3	3	-1	50 dBA	Y	Y	Y	Y
POR28	Day	34	32	33	18	45 dBA	Y	Y	Y	Y
POR28	Evening/Night	31	32	31	18	40 dBA	Y	Y	Y	Y
POR28	Impulsive	7	-	-	-	45 dBAI	Y	-	-	-
POR28	Testing	1	17	17	11	50 dBA	Y	Y	Y	Y
POR29	Day	30	30	31	14	45 dBA	Y	Y	Y	Y
POR29	Evening/Night	23	27	26	14	40 dBA	Y	Y	Y	Y
POR29	Impulsive	19	-	-	-	45 dBAI	Y	-	-	-
POR29	Testing	-2	11	11	6	50 dBA	Y	Y	Y	Y

Table A-5f: Noise Modelling Results - Federal Assessment Framework

POR	Period	Predicted Sound Levels ($L_{Aeq-1hr}$)				HC Criteria	Compliant [Y/N]			
		C	P-P	U-P	CI		C	P-P	U-P	CI
POR1	Day	43	41	43	31	55 dBA	Y	Y	Y	Y
POR1	Evening/Night	38	39	40	31	45 dBA	Y	Y	Y	Y
POR2	Day	33	31	32	17	55 dBA	Y	Y	Y	Y
POR2	Evening/Night	30	31	30	17	45 dBA	Y	Y	Y	Y
POR3	Day	33	32	33	17	55 dBA	Y	Y	Y	Y
POR3	Evening/Night	31	31	30	17	45 dBA	Y	Y	Y	Y
POR4	Day	43	42	44	25	55 dBA	Y	Y	Y	Y
POR4	Evening/Night	33	36	36	25	45 dBA	Y	Y	Y	Y
POR5	Day	39	38	40	23	55 dBA	Y	Y	Y	Y
POR5	Evening/Night	34	37	36	23	45 dBA	Y	Y	Y	Y
POR6	Day	34	32	33	18	55 dBA	Y	Y	Y	Y
POR6	Evening/Night	31	31	31	18	45 dBA	Y	Y	Y	Y
POR7	Day	30	29	29	14	55 dBA	Y	Y	Y	Y
POR7	Evening/Night	28	28	27	14	45 dBA	Y	Y	Y	Y
POR8	Day	36	35	36	18	55 dBA	Y	Y	Y	Y
POR8	Evening/Night	26	31	30	18	45 dBA	Y	Y	Y	Y
POR9	Day	41	40	42	23	55 dBA	Y	Y	Y	Y
POR9	Evening/Night	31	35	35	23	45 dBA	Y	Y	Y	Y
POR10	Day	40	39	41	24	55 dBA	Y	Y	Y	Y
POR10	Evening/Night	32	35	34	24	45 dBA	Y	Y	Y	Y
POR11	Day	40	38	40	27	55 dBA	Y	Y	Y	Y
POR11	Evening/Night	36	37	37	27	45 dBA	Y	Y	Y	Y
POR12	Day	34	34	35	19	55 dBA	Y	Y	Y	Y
POR12	Evening/Night	27	31	30	19	45 dBA	Y	Y	Y	Y
POR13	Day	32	31	33	16	55 dBA	Y	Y	Y	Y
POR13	Evening/Night	24	28	27	16	45 dBA	Y	Y	Y	Y
POR14	Day	31	30	31	15	55 dBA	Y	Y	Y	Y

POR14	Evening/Night	23	28	27	15	45 dBA	Y	Y	Y	Y
POR15	Day	30	30	31	14	55 dBA	Y	Y	Y	Y
POR15	Evening/Night	23	27	26	14	45 dBA	Y	Y	Y	Y
POR16	Day	28	27	29	13	55 dBA	Y	Y	Y	Y
POR16	Evening/Night	21	25	24	13	45 dBA	Y	Y	Y	Y
POR17	Day	26	26	27	11	55 dBA	Y	Y	Y	Y
POR17	Evening/Night	19	24	22	11	45 dBA	Y	Y	Y	Y
POR18	Day	33	31	32	17	55 dBA	Y	Y	Y	Y
POR18	Evening/Night	30	30	30	17	45 dBA	Y	Y	Y	Y
POR19	Day	31	30	31	15	55 dBA	Y	Y	Y	Y
POR19	Evening/Night	23	28	26	15	45 dBA	Y	Y	Y	Y
POR20	Day	32	31	32	16	55 dBA	Y	Y	Y	Y
POR20	Evening/Night	24	28	27	16	45 dBA	Y	Y	Y	Y
POR21	Day	38	37	38	20	55 dBA	Y	Y	Y	Y
POR21	Evening/Night	28	33	32	20	45 dBA	Y	Y	Y	Y
POR22	Day	26	26	26	11	55 dBA	Y	Y	Y	Y
POR22	Evening/Night	23	25	23	11	45 dBA	Y	Y	Y	Y
POR23	Day	25	25	24	9	55 dBA	Y	Y	Y	Y
POR23	Evening/Night	21	24	22	9	45 dBA	Y	Y	Y	Y
POR24	Day	26	24	25	10	55 dBA	Y	Y	Y	Y
POR24	Evening/Night	23	24	22	10	45 dBA	Y	Y	Y	Y
POR25	Day	20	20	20	5	55 dBA	Y	Y	Y	Y
POR25	Evening/Night	16	19	17	5	45 dBA	Y	Y	Y	Y
POR26	Day	30	28	29	14	55 dBA	Y	Y	Y	Y
POR26	Evening/Night	27	28	26	14	45 dBA	Y	Y	Y	Y
POR27	Day	25	25	24	9	55 dBA	Y	Y	Y	Y
POR27	Evening/Night	21	24	22	9	45 dBA	Y	Y	Y	Y
POR28	Day	34	32	33	18	55 dBA	Y	Y	Y	Y
POR28	Evening/Night	31	32	31	18	45 dBA	Y	Y	Y	Y
POR29	Day	30	30	31	14	55 dBA	Y	Y	Y	Y
POR29	Evening/Night	23	27	26	14	45 dBA	Y	Y	Y	Y

Table A-6a: Acoustic Assessment Summary - Construction

Project: Great Bear Project
Location: Red Lake, ON

Point of Reception ID	Point of Reception Description	Time Period [1]	Total Sound Level at POR [2] (dBA)	Verified by Acoustic Audit [3] (Yes/No)	Performance Limit [4] (dBA)	Performance Limit Source [5] (C / M/ D)	Compliance with Performance Limit (Yes/No)
POR1	Residence/Cabin/Lodge/Camp	Daytime	43	No	45	D	Yes
		Evening	38	No	40	D	Yes
		Nighttime	38	No	40	D	Yes
POR2	Residence/Cabin/Lodge/Camp	Daytime	33	No	45	D	Yes
		Evening	30	No	40	D	Yes
		Nighttime	30	No	40	D	Yes
POR3	Residence/Cabin/Lodge/Camp	Daytime	33	No	45	D	Yes
		Evening	31	No	40	D	Yes
		Nighttime	31	No	40	D	Yes
POR4	Residence/Cabin/Lodge/Camp	Daytime	43	No	45	D	Yes
		Evening	33	No	40	D	Yes
		Nighttime	33	No	40	D	Yes
POR5	Residence/Cabin/Lodge/Camp	Daytime	39	No	45	D	Yes
		Evening	34	No	40	D	Yes
		Nighttime	34	No	40	D	Yes
POR6	Residence/Cabin/Lodge/Camp	Daytime	34	No	45	D	Yes
		Evening	31	No	40	D	Yes
		Nighttime	31	No	40	D	Yes
POR7	Residence/Cabin/Lodge/Camp	Daytime	30	No	45	D	Yes
		Evening	28	No	40	D	Yes
		Nighttime	28	No	40	D	Yes
POR8	Residence/Cabin/Lodge/Camp	Daytime	36	No	45	D	Yes
		Evening	26	No	40	D	Yes
		Nighttime	26	No	40	D	Yes
POR9	Residence/Cabin/Lodge/Camp	Daytime	41	No	45	D	Yes
		Evening	32	No	40	D	Yes
		Nighttime	31	No	40	D	Yes
POR10	Residence/Cabin/Lodge/Camp	Daytime	40	No	45	D	Yes
		Evening	32	No	40	D	Yes
		Nighttime	32	No	40	D	Yes
POR11	Residence/Cabin/Lodge/Camp	Daytime	40	No	45	D	Yes
		Evening	36	No	40	D	Yes
		Nighttime	36	No	40	D	Yes
POR12	Residence/Cabin/Lodge/Camp	Daytime	34	No	45	D	Yes
		Evening	27	No	40	D	Yes
		Nighttime	27	No	40	D	Yes
POR13	Residence/Cabin/Lodge/Camp	Daytime	32	No	45	D	Yes
		Evening	24	No	40	D	Yes
		Nighttime	24	No	40	D	Yes
POR14	Residence/Cabin/Lodge/Camp	Daytime	31	No	45	D	Yes
		Evening	23	No	40	D	Yes

		Nighttime	23	No	40	D	Yes
POR15	Residence/Cabin/Lodge/Camp	Daytime	30	No	45	D	Yes
		Evening	23	No	40	D	Yes
		Nighttime	23	No	40	D	Yes
POR16	Residence/Cabin/Lodge/Camp	Daytime	28	No	45	D	Yes
		Evening	21	No	40	D	Yes
		Nighttime	21	No	40	D	Yes
POR17	Commercial	Daytime	26	No	45	D	Yes
		Evening	20	No	40	D	Yes
		Nighttime	19	No	40	D	Yes
POR18	Residence/Cabin/Lodge/Camp	Daytime	33	No	45	D	Yes
		Evening	30	No	40	D	Yes
		Nighttime	30	No	40	D	Yes
POR19	Empty Lot, Non-mining Land Area	Daytime	31	No	45	D	Yes
		Evening	23	No	40	D	Yes
		Nighttime	23	No	40	D	Yes
POR20	Residence/Cabin/Lodge/Camp	Daytime	32	No	45	D	Yes
		Evening	24	No	40	D	Yes
		Nighttime	24	No	40	D	Yes
POR21	Commercial	Daytime	38	No	45	D	Yes
		Evening	28	No	40	D	Yes
		Nighttime	28	No	40	D	Yes
POR22	Residence/Cabin/Lodge/Camp	Daytime	26	No	45	D	Yes
		Evening	23	No	40	D	Yes
		Nighttime	23	No	40	D	Yes
POR23	Residence/Cabin/Lodge/Camp	Daytime	25	No	45	D	Yes
		Evening	21	No	40	D	Yes
		Nighttime	21	No	40	D	Yes
POR24	Residence/Cabin/Lodge/Camp	Daytime	26	No	45	D	Yes
		Evening	23	No	40	D	Yes
		Nighttime	23	No	40	D	Yes
POR25	Residence/Cabin/Lodge/Camp	Daytime	20	No	45	D	Yes
		Evening	16	No	40	D	Yes
		Nighttime	16	No	40	D	Yes
POR26	Residence/Cabin/Lodge/Camp	Daytime	30	No	45	D	Yes
		Evening	27	No	40	D	Yes
		Nighttime	27	No	40	D	Yes
POR27	Residence/Cabin/Lodge/Camp	Daytime	25	No	45	D	Yes
		Evening	21	No	40	D	Yes
		Nighttime	21	No	40	D	Yes
POR28	Residence/Cabin/Lodge/Camp	Daytime	34	No	45	D	Yes
		Evening	31	No	40	D	Yes
		Nighttime	31	No	40	D	Yes
POR29	Residence/Cabin/Lodge/Camp	Daytime	30	No	45	D	Yes
		Evening	23	No	40	D	Yes
		Nighttime	23	No	40	D	Yes

Notes on Table:

1 Daytime 07:00 to 19:00. Evening 19:00 to 23:00. Night-time 23:00 to 07:00

2 Worst-case cumulative 1-hour sound level from all applicable sources operating. Blasting is assessed separately.

3 Has an acoustic audit been conducted with the source in place and operating?

4 Applicable worst-case sound level limit.

5 The following Performance guideline limits are based on Ontario's and Federal regulator as a reference:

C = Calculated based on road traffic volumes in compliance with NPC-206 requirements.

M = Measured based on monitoring for a minimum 48 hour period, in accordance with NPC-233 requirements.

D = Default guideline minima per NPC-300, as applicable

Table A-6b: Acoustic Assessment Summary - Peak Production

Project: Great Bear Project
Location: Red Lake, ON

Point of Reception ID	Point of Reception Description	Time Period [1]	Total Sound Level at POR [2] (dBA)	Verified by Acoustic Audit [3] (Yes/No)	Performance Limit [4] (dBA)	Performance Limit Source [5] (C / M/ D)	Compliance with Performance Limit (Yes/No)
POR1	Residence/Cabin/Lodge/Camp	Daytime	41	No	45	D	Yes
		Evening	39	No	40	D	Yes
		Nighttime	39	No	40	D	Yes
POR2	Residence/Cabin/Lodge/Camp	Daytime	31	No	45	D	Yes
		Evening	31	No	40	D	Yes
		Nighttime	31	No	40	D	Yes
POR3	Residence/Cabin/Lodge/Camp	Daytime	32	No	45	D	Yes
		Evening	31	No	40	D	Yes
		Nighttime	31	No	40	D	Yes
POR4	Residence/Cabin/Lodge/Camp	Daytime	42	No	45	D	Yes
		Evening	36	No	40	D	Yes
		Nighttime	36	No	40	D	Yes
POR5	Residence/Cabin/Lodge/Camp	Daytime	38	No	45	D	Yes
		Evening	37	No	40	D	Yes
		Nighttime	37	No	40	D	Yes
POR6	Residence/Cabin/Lodge/Camp	Daytime	32	No	45	D	Yes
		Evening	31	No	40	D	Yes
		Nighttime	31	No	40	D	Yes
POR7	Residence/Cabin/Lodge/Camp	Daytime	29	No	45	D	Yes
		Evening	28	No	40	D	Yes
		Nighttime	28	No	40	D	Yes
POR8	Residence/Cabin/Lodge/Camp	Daytime	35	No	45	D	Yes
		Evening	31	No	40	D	Yes
		Nighttime	31	No	40	D	Yes
POR9	Residence/Cabin/Lodge/Camp	Daytime	40	No	45	D	Yes
		Evening	35	No	40	D	Yes
		Nighttime	35	No	40	D	Yes
POR10	Residence/Cabin/Lodge/Camp	Daytime	39	No	45	D	Yes
		Evening	35	No	40	D	Yes
		Nighttime	35	No	40	D	Yes
POR11	Residence/Cabin/Lodge/Camp	Daytime	38	No	45	D	Yes
		Evening	37	No	40	D	Yes
		Nighttime	37	No	40	D	Yes
POR12	Residence/Cabin/Lodge/Camp	Daytime	34	No	45	D	Yes
		Evening	31	No	40	D	Yes
		Nighttime	31	No	40	D	Yes
POR13	Residence/Cabin/Lodge/Camp	Daytime	31	No	45	D	Yes
		Evening	28	No	40	D	Yes
		Nighttime	28	No	40	D	Yes
		Daytime	30	No	45	D	Yes

POR14	Residence/Cabin/Lodge/Camp	Evening	28	No	40	D	Yes
		Nighttime	28	No	40	D	Yes
POR15	Residence/Cabin/Lodge/Camp	Daytime	30	No	45	D	Yes
		Evening	27	No	40	D	Yes
		Nighttime	27	No	40	D	Yes
POR16	Residence/Cabin/Lodge/Camp	Daytime	27	No	45	D	Yes
		Evening	25	No	40	D	Yes
		Nighttime	25	No	40	D	Yes
POR17	Commercial	Daytime	26	No	45	D	Yes
		Evening	24	No	40	D	Yes
		Nighttime	24	No	40	D	Yes
POR18	Residence/Cabin/Lodge/Camp	Daytime	31	No	45	D	Yes
		Evening	30	No	40	D	Yes
		Nighttime	30	No	40	D	Yes
POR19	Empty Lot, Non-mining Land Area	Daytime	30	No	45	D	Yes
		Evening	28	No	40	D	Yes
		Nighttime	28	No	40	D	Yes
POR20	Residence/Cabin/Lodge/Camp	Daytime	31	No	45	D	Yes
		Evening	28	No	40	D	Yes
		Nighttime	28	No	40	D	Yes
POR21	Commercial	Daytime	37	No	45	D	Yes
		Evening	33	No	40	D	Yes
		Nighttime	33	No	40	D	Yes
POR22	Residence/Cabin/Lodge/Camp	Daytime	26	No	45	D	Yes
		Evening	25	No	40	D	Yes
		Nighttime	25	No	40	D	Yes
POR23	Residence/Cabin/Lodge/Camp	Daytime	25	No	45	D	Yes
		Evening	24	No	40	D	Yes
		Nighttime	24	No	40	D	Yes
POR24	Residence/Cabin/Lodge/Camp	Daytime	24	No	45	D	Yes
		Evening	24	No	40	D	Yes
		Nighttime	24	No	40	D	Yes
POR25	Residence/Cabin/Lodge/Camp	Daytime	20	No	45	D	Yes
		Evening	19	No	40	D	Yes
		Nighttime	19	No	40	D	Yes
POR26	Residence/Cabin/Lodge/Camp	Daytime	28	No	45	D	Yes
		Evening	28	No	40	D	Yes
		Nighttime	28	No	40	D	Yes
POR27	Residence/Cabin/Lodge/Camp	Daytime	25	No	45	D	Yes
		Evening	24	No	40	D	Yes
		Nighttime	24	No	40	D	Yes
POR28	Residence/Cabin/Lodge/Camp	Daytime	32	No	45	D	Yes
		Evening	32	No	40	D	Yes
		Nighttime	32	No	40	D	Yes
POR29	Residence/Cabin/Lodge/Camp	Daytime	30	No	45	D	Yes
		Evening	27	No	40	D	Yes
		Nighttime	27	No	40	D	Yes

Notes on Table:

1 Daytime 07:00 to 19:00. Evening 19:00 to 23:00. Night-time 23:00 to 07:00

2 Worst-case cumulative 1-hour sound level from all applicable sources operating. Blasting is assessed separately.

3 Has an acoustic audit been conducted with the source in place and operating?

4 Applicable worst-case sound level limit.

5 The following Performance guideline limits are based on Ontario's and Federal regulator as a reference:

C = Calculated based on road traffic volumes in compliance with NPC-206 requirements.

M = Measured based on monitoring for a minimum 48 hour period, in accordance with NPC-233 requirements.

D = Default guideline minima per NPC-300, as applicable

Table A-6c: Acoustic Assessment Summary - Underground Production (Mitigated)

Project: Great Bear Project
Location: Red Lake, ON

Point of Reception ID	Point of Reception Description	Time Period [1]	Total Sound Level at POR [2] (dBA)	Verified by Acoustic Audit [3] (Yes/No)	Performance Limit [4] (dBA)	Performance Limit Source [5] (C / M/ D)	Compliance with Performance Limit (Yes/No)
POR1	Residence/Cabin/Lodge/Camp	Daytime	43	No	45	D	Yes
		Evening	40	No	40	D	Yes
		Nighttime	40	No	40	D	Yes
POR2	Residence/Cabin/Lodge/Camp	Daytime	32	No	45	D	Yes
		Evening	30	No	40	D	Yes
		Nighttime	30	No	40	D	Yes
POR3	Residence/Cabin/Lodge/Camp	Daytime	33	No	45	D	Yes
		Evening	30	No	40	D	Yes
		Nighttime	30	No	40	D	Yes
POR4	Residence/Cabin/Lodge/Camp	Daytime	44	No	45	D	Yes
		Evening	36	No	40	D	Yes
		Nighttime	36	No	40	D	Yes
POR5	Residence/Cabin/Lodge/Camp	Daytime	40	No	45	D	Yes
		Evening	36	No	40	D	Yes
		Nighttime	36	No	40	D	Yes
POR6	Residence/Cabin/Lodge/Camp	Daytime	33	No	45	D	Yes
		Evening	31	No	40	D	Yes
		Nighttime	31	No	40	D	Yes
POR7	Residence/Cabin/Lodge/Camp	Daytime	29	No	45	D	Yes
		Evening	27	No	40	D	Yes
		Nighttime	27	No	40	D	Yes
POR8	Residence/Cabin/Lodge/Camp	Daytime	36	No	45	D	Yes
		Evening	30	No	40	D	Yes
		Nighttime	30	No	40	D	Yes
POR9	Residence/Cabin/Lodge/Camp	Daytime	42	No	45	D	Yes
		Evening	35	No	40	D	Yes
		Nighttime	35	No	40	D	Yes
POR10	Residence/Cabin/Lodge/Camp	Daytime	41	No	45	D	Yes
		Evening	34	No	40	D	Yes
		Nighttime	34	No	40	D	Yes
POR11	Residence/Cabin/Lodge/Camp	Daytime	40	No	45	D	Yes
		Evening	37	No	40	D	Yes
		Nighttime	37	No	40	D	Yes
POR12	Residence/Cabin/Lodge/Camp	Daytime	35	No	45	D	Yes
		Evening	30	No	40	D	Yes
		Nighttime	30	No	40	D	Yes
POR13	Residence/Cabin/Lodge/Camp	Daytime	33	No	45	D	Yes
		Evening	27	No	40	D	Yes
		Nighttime	27	No	40	D	Yes
		Daytime	31	No	45	D	Yes

POR14	Residence/Cabin/Lodge/Camp	Evening	27	No	40	D	Yes
		Nighttime	27	No	40	D	Yes
POR15	Residence/Cabin/Lodge/Camp	Daytime	31	No	45	D	Yes
		Evening	26	No	40	D	Yes
		Nighttime	26	No	40	D	Yes
POR16	Residence/Cabin/Lodge/Camp	Daytime	29	No	45	D	Yes
		Evening	24	No	40	D	Yes
		Nighttime	24	No	40	D	Yes
POR17	Commercial	Daytime	27	No	45	D	Yes
		Evening	22	No	40	D	Yes
		Nighttime	22	No	40	D	Yes
POR18	Residence/Cabin/Lodge/Camp	Daytime	32	No	45	D	Yes
		Evening	30	No	40	D	Yes
		Nighttime	30	No	40	D	Yes
POR19	Empty Lot, Non-mining Land Area	Daytime	31	No	45	D	Yes
		Evening	26	No	40	D	Yes
		Nighttime	26	No	40	D	Yes
POR20	Residence/Cabin/Lodge/Camp	Daytime	32	No	45	D	Yes
		Evening	27	No	40	D	Yes
		Nighttime	27	No	40	D	Yes
POR21	Commercial	Daytime	38	No	45	D	Yes
		Evening	32	No	40	D	Yes
		Nighttime	32	No	40	D	Yes
POR22	Residence/Cabin/Lodge/Camp	Daytime	26	No	45	D	Yes
		Evening	23	No	40	D	Yes
		Nighttime	23	No	40	D	Yes
POR23	Residence/Cabin/Lodge/Camp	Daytime	24	No	45	D	Yes
		Evening	22	No	40	D	Yes
		Nighttime	22	No	40	D	Yes
POR24	Residence/Cabin/Lodge/Camp	Daytime	25	No	45	D	Yes
		Evening	22	No	40	D	Yes
		Nighttime	22	No	40	D	Yes
POR25	Residence/Cabin/Lodge/Camp	Daytime	20	No	45	D	Yes
		Evening	17	No	40	D	Yes
		Nighttime	17	No	40	D	Yes
POR26	Residence/Cabin/Lodge/Camp	Daytime	29	No	45	D	Yes
		Evening	26	No	40	D	Yes
		Nighttime	26	No	40	D	Yes
POR27	Residence/Cabin/Lodge/Camp	Daytime	24	No	45	D	Yes
		Evening	22	No	40	D	Yes
		Nighttime	22	No	40	D	Yes
POR28	Residence/Cabin/Lodge/Camp	Daytime	33	No	45	D	Yes
		Evening	31	No	40	D	Yes
		Nighttime	31	No	40	D	Yes
POR29	Residence/Cabin/Lodge/Camp	Daytime	31	No	45	D	Yes
		Evening	26	No	40	D	Yes
		Nighttime	26	No	40	D	Yes

Notes on Table:

1 Daytime 07:00 to 19:00. Evening 19:00 to 23:00. Night-time 23:00 to 07:00

2 Worst-case cumulative 1-hour sound level from all applicable sources operating. Blasting is assessed separately.

3 Has an acoustic audit been conducted with the source in place and operating?

4 Applicable worst-case sound level limit.

5 The following Performance guideline limits are based on Ontario's and Federal regulator as a reference:

C = Calculated based on road traffic volumes in compliance with NPC-206 requirements.

M = Measured based on monitoring for a minimum 48 hour period, in accordance with NPC-233 requirements.

D = Default guideline minima per NPC-300, as applicable

Table A-6d: Acoustic Assessment Summary - Closure

Project: Great Bear Project
Location: Red Lake, ON

Point of Reception ID	Point of Reception Description	Time Period [1]	Total Sound Level at POR [2] (dBA)	Verified by Acoustic Audit [3] (Yes/No)	Performance Limit [4] (dBA)	Performance Limit Source [5] (C / M/ D)	Compliance with Performance Limit (Yes/No)
POR1	Residence/Cabin/Lodge/Camp	Daytime	31	No	45	D	Yes
		Evening	31	No	40	D	Yes
		Nighttime	31	No	40	D	Yes
POR2	Residence/Cabin/Lodge/Camp	Daytime	17	No	45	D	Yes
		Evening	17	No	40	D	Yes
		Nighttime	17	No	40	D	Yes
POR3	Residence/Cabin/Lodge/Camp	Daytime	17	No	45	D	Yes
		Evening	17	No	40	D	Yes
		Nighttime	17	No	40	D	Yes
POR4	Residence/Cabin/Lodge/Camp	Daytime	25	No	45	D	Yes
		Evening	25	No	40	D	Yes
		Nighttime	25	No	40	D	Yes
POR5	Residence/Cabin/Lodge/Camp	Daytime	23	No	45	D	Yes
		Evening	23	No	40	D	Yes
		Nighttime	23	No	40	D	Yes
POR6	Residence/Cabin/Lodge/Camp	Daytime	18	No	45	D	Yes
		Evening	18	No	40	D	Yes
		Nighttime	18	No	40	D	Yes
POR7	Residence/Cabin/Lodge/Camp	Daytime	14	No	45	D	Yes
		Evening	14	No	40	D	Yes
		Nighttime	14	No	40	D	Yes
POR8	Residence/Cabin/Lodge/Camp	Daytime	18	No	45	D	Yes
		Evening	18	No	40	D	Yes
		Nighttime	18	No	40	D	Yes
POR9	Residence/Cabin/Lodge/Camp	Daytime	23	No	45	D	Yes
		Evening	23	No	40	D	Yes
		Nighttime	23	No	40	D	Yes
POR10	Residence/Cabin/Lodge/Camp	Daytime	24	No	45	D	Yes
		Evening	24	No	40	D	Yes
		Nighttime	24	No	40	D	Yes
POR11	Residence/Cabin/Lodge/Camp	Daytime	27	No	45	D	Yes
		Evening	27	No	40	D	Yes
		Nighttime	27	No	40	D	Yes
POR12	Residence/Cabin/Lodge/Camp	Daytime	19	No	45	D	Yes
		Evening	19	No	40	D	Yes
		Nighttime	19	No	40	D	Yes
POR13	Residence/Cabin/Lodge/Camp	Daytime	16	No	45	D	Yes
		Evening	16	No	40	D	Yes
		Nighttime	16	No	40	D	Yes

POR14	Residence/Cabin/Lodge/Camp	Daytime	15	No	45	D	Yes
		Evening	15	No	40	D	Yes
		Nighttime	15	No	40	D	Yes
POR15	Residence/Cabin/Lodge/Camp	Daytime	14	No	45	D	Yes
		Evening	14	No	40	D	Yes
		Nighttime	14	No	40	D	Yes
POR16	Residence/Cabin/Lodge/Camp	Daytime	13	No	45	D	Yes
		Evening	13	No	40	D	Yes
		Nighttime	13	No	40	D	Yes
POR17	Commercial	Daytime	11	No	45	D	Yes
		Evening	11	No	40	D	Yes
		Nighttime	11	No	40	D	Yes
POR18	Residence/Cabin/Lodge/Camp	Daytime	17	No	45	D	Yes
		Evening	17	No	40	D	Yes
		Nighttime	17	No	40	D	Yes
POR19	Empty Lot, Non-mining Land Area	Daytime	15	No	45	D	Yes
		Evening	15	No	40	D	Yes
		Nighttime	15	No	40	D	Yes
POR20	Residence/Cabin/Lodge/Camp	Daytime	16	No	45	D	Yes
		Evening	16	No	40	D	Yes
		Nighttime	16	No	40	D	Yes
POR21	Commercial	Daytime	20	No	45	D	Yes
		Evening	20	No	40	D	Yes
		Nighttime	20	No	40	D	Yes
POR22	Residence/Cabin/Lodge/Camp	Daytime	11	No	45	D	Yes
		Evening	11	No	40	D	Yes
		Nighttime	11	No	40	D	Yes
POR23	Residence/Cabin/Lodge/Camp	Daytime	9	No	45	D	Yes
		Evening	9	No	40	D	Yes
		Nighttime	9	No	40	D	Yes
POR24	Residence/Cabin/Lodge/Camp	Daytime	10	No	45	D	Yes
		Evening	10	No	40	D	Yes
		Nighttime	10	No	40	D	Yes
POR25	Residence/Cabin/Lodge/Camp	Daytime	5	No	45	D	Yes
		Evening	5	No	40	D	Yes
		Nighttime	5	No	40	D	Yes
POR26	Residence/Cabin/Lodge/Camp	Daytime	14	No	45	D	Yes
		Evening	14	No	40	D	Yes
		Nighttime	14	No	40	D	Yes
POR27	Residence/Cabin/Lodge/Camp	Daytime	9	No	45	D	Yes
		Evening	9	No	40	D	Yes
		Nighttime	9	No	40	D	Yes
POR28	Residence/Cabin/Lodge/Camp	Daytime	18	No	45	D	Yes
		Evening	18	No	40	D	Yes
		Nighttime	18	No	40	D	Yes
POR29	Residence/Cabin/Lodge/Camp	Daytime	14	No	45	D	Yes
		Evening	14	No	40	D	Yes
		Nighttime	14	No	40	D	Yes

Notes on Table:

1 Daytime 07:00 to 19:00. Evening 19:00 to 23:00. Night-time 23:00 to 07:00

2 Worst-case cumulative 1-hour sound level from all applicable sources operating. Blasting is assessed separately.

3 Has an acoustic audit been conducted with the source in place and operating?

4 Applicable worst-case sound level limit.

5 The following Performance guideline limits are based on Ontario's and Federal regulator as a reference:

C = Calculated based on road traffic volumes in compliance with NPC-206 requirements.

M = Measured based on monitoring for a minimum 48 hour period, in accordance with NPC-233 requirements.

D = Default guideline minima per NPC-300, as applicable

Table A-7 - Preliminary Equipment Selection

Equipment Name	Description	Octave Band Frequencies Sound Powel Level (dB)									PWL dBA	Source Type	Speed (km/h)
		31.5	63	125	250	500	1000	2000	4000	8000			
AggregateFeed_CRF_Plant	CRF Plant--Aggregate Feeder	100	100	94	91	91	89	87	83	78	94	Point (Part of Cumulative)	-
AggregateTransferConveyor	CRF Plant--Aggregate Transfer Conveyor	88	87	88	86	85	86	84	80	73	90	Point (Part of Cumulative)	-
Air_Compressor_S158Q	Air Compressor--Sullair 185Q	91	87	92	91	89	92	97	94	87	101	Point	-
AirCompressor_CRF	CRF Plant--Air Compressor	83	79	84	83	81	84	89	86	79	93	Point (Part of Cumulative)	-
AirCompressor_PastPlant	Paste Plant (Backfill) Indoors--Air Compressor	93	89	94	93	91	94	99	96	89	102	Point (Part of Cumulative)	-
ApronFeedDustCollector	Feeder generator Collector--Apron Feeder Dust Collector	104	103	98	95	93	96	99	95	93	103	Point	-
ArticulatedTruck_40t	Articulating Truck--40t	-	97	102	105	100	98	95	89	83	104	Line	22.6
BackHoe_330	Backhoe--330	-	114	114	109	99	94	90	84	80	104	Point	-
BackhoeLoader_430	Backhoe Loader--Cat 430	100	104	107	106	97	94	89	83	78	101	Point	-
Ball_mill_700kW	Ball Mil, 7000kW--Inside building	106	102	107	105	105	103	103	102	99	110	Point (Part of Cumulative)	-
BatchPlant_SingleBandNoise	Batch Plant -- Ref FHA -- Single 500 Hz band noise	-	-	-	-	118	-	-	-	-	115	Point	-
BlasterLoader_CAT262	Blasting Loader--CAT 262	105	108	114	104	94	91	86	80	75	101	Point	-
BlasterTruckF350	Blasters Truck--F350	88	93	95	94	95	95	93	89	83	99	Line	22.6
BoomTruck_Terex5092_25t	Boom Truck 25t--Terex 5092, 2-Stage Jib	105	110	112	111	112	112	110	106	100	117	Point	-
BorrowSource_ScreeningPlant	Borrow Source - Screening Plant--	-	119	128	119	110	104	104	102	105	116	Point	-
BorrowSourceLoader_CAT966	Borrow Source - Loader (FEL)--CAT 966	112	99	105	103	102	103	102	100	103	109	Line	22.6
BullDozer_D9	Bulldozer - D9	117	121	124	121	111	108	103	98	92	116	Area	-
BusPersonnel	Bus (60 seats)--BusPersonnel	87	92	94	93	94	94	92	88	82	99	Line	22.6
CementScreenConveyor	CRF Plant--Cement Screw Conveyor	68	67	68	66	65	66	64	60	53	70	Point (Part of Cumulative)	-
CFR_plant	CFR Plant Area	106	118	127	118	111	108	108	104	104	117	Area	-
CIP_DischargePump	CIP Discharge Pump, 150kW--Inside building	98	98	101	103	105	106	104	99	92	110	Point (Part of Cumulative)	-
CIPTailingsThickenerUnderflowPump	CIP Tailings Thickener Underflow Pump	95	95	98	100	102	103	102	97	89	107	Point	-
Compactor_CAT64B	Compactor--CAT CS64B	107	111	114	113	104	101	96	90	85	108	Area	-
CompactorJumpingJack	Compactor-- Jumping Jack	96	92	97	96	94	97	102	99	92	106	Point	-
CompactorVibrator_CAT433	Compactor Vib--CAT 433	125	116	122	112	102	99	94	89	83	109	Area	-
CompactorVibrator_CAT434	Compactor Vib--CAT CB434	121	112	118	108	98	95	90	85	79	105	Area	-
Compressor_S375H	Compressor--Sullair 375H	73	69	74	73	71	74	79	76	69	83	Point	-
CompressorDoosan_XP375	COMPRESOR--DOOSAN XP-375	89	85	90	89	87	90	95	92	85	99	point	-
ConcreteInternalVibrator	Concrete Internal Vibrator--	66	62	67	66	64	67	72	69	62	76	Point	-
ConcreteMixer	Concrete mixer-- 250 L	95	91	96	95	93	96	101	98	91	105	Point	-
ConcretePumpTruck	Concrete Pump Truck--	119	119	108	112	107	107	108	101	97	113	Line	22.6
ConcreteTrowelPower	Concrete Trowel Power--	100	96	101	100	98	101	106	103	96	110	Point	-
ConcreteTruck_8m3	Concrete Truck --8m3 capacity, 6x4, 310 HP	117	117	106	110	105	105	106	99	95	111	Line	22.6
ConcreteVibratoryPowerScreeds	Concrete Vibratory Power Screeds--	98	94	99	98	96	99	104	101	94	108	Point	-
ConeCrusherDustCollector	Dust Collector for Cone Crusher	104	103	98	95	93	96	99	95	93	103	Point	-
ContainerTrailerTruck	Container Trailer Truck--ContTT	88	93	95	94	95	95	93	89	83	99	Line	22.6
Crane_80t	Crane--80t	107	107	105	102	104	100	97	88	83	105	Point	-
CraneCrawler_50t	Crane Crawler--50t	99	103	106	103	93	90	85	80	74	98	Point	-
CraneHydraulic_31ton	Crane Hydraulic--31t	124	115	121	111	101	98	93	88	82	108	Point	-
CrawlerConventionalCrane_150t	Crawler Conventional Crane 150T (used)--	110	110	108	105	107	103	100	91	86	108	Point	-
CRF_Plant_Mixer	CRF Plant--CRF Mixer	98	98	101	103	106	106	105	100	92	111	Point (Part of Cumulative)	-
Crusher_Sandvik_QJ341	Crusher--Sandvik QJ341	-	125	134	125	116	110	110	108	111	122	Point	-
CycloneFeedPump	Cyclone Feed Pump--Inside building	95	97	99	99	99	101	99	96	89	105	Point (Part of Cumulative)	-
DEMAGCrane_300t	300T Crane - DEMAG-- DEMAG	105	110	112	111	112	112	110	106	100	117	Point	-
DesulphurizationAgitator	Desulphurization AGITATOR, 185kW--Outside building	89	89	92	94	97	97	96	91	83	102	Point	-
DesulphurizationFlotationBlower	Flotation generator Blower 1--Desulphurization Flotation Blower 1	90	87	86	82	77	75	71	67	60	81	Point	-
DesulphurizationSlurryPump	Slurry pump--Desulphurization Floatation Circuit Feed Pump 1	96	96	99	101	104	104	103	98	90	109	point	-
DetoxBlower_4000cfm	Detox Blower, 315kW--4000 cfm inside building	92	89	88	84	79	77	73	69	62	83	Point	-
DetoxBlower_4000cfm	Detox Blower, 315kW--4000 cfm inside building	92	89	88	84	79	77	73	69	62	83	Point	-
DewateringPump	Dewatering Pump--DeWPump	92	92	95	97	100	100	99	94	86	104	Point	-
DieselGen_1000kW_case	Diesel Generator CAT3512B	118	133	133	129	121	120	121	121	119	129	point	-
DieselGen_1000kW_ex	Diesel Generator CAT3512B exhaust	123	123	133	142	133	126	124	121	125	136	point	-
DieselGen_100kW_case	DieselGen_100kW_Case--Diesel GenSet Casing	-	114	104	94	97	93	94	95	96	102	Point	-
DieselGen_100kW_ex	DieselGen_100kW_Ex--Diesel GenSet Exhaust	-	120	125	122	116	117	114	110	99	122	Point	-
DieselGen_200kW_case	DieselGen_200kW_Case--Diesel GenSet Casing	-	106	109	101	97	93	91	89	83	100	Point	-
DieselGen_200kW_ex	DieselGen_200kW_Ex--Diesel GenSet Exhaust	-	123	124	124	119	115	115	109	95	122	Point	-
DieselGen_250kW_case	DieselGen_250kW_Case--Diesel GenSet Casing	-	107	107	101	92	86	86	83	80	97	Point	-
DieselGen_250kW_ex	DieselGen_250kW_Ex--Diesel GenSet Exhaust	-	128	126	130	126	126	127	119	112	132	Point	-
DieselGen_500kW_case	DieselGen_500kW_Case--	-	-	103	101	94	90	88	84	80	97	Point	-
DieselGen_500kW_ex	DieselGen_500kW_Ex--	-	-	123	128	122	118	114	108	101	124	Point	-
DieselGen_50kW_case	DieselGen_50kW_Case--Diesel GenSet Casing	-	111	99	102	97	95	93	88	87	100	Point	-
DieselGen_50kW_ex	DieselGen_50kW_Ex--Diesel GenSet Exhaust	-	118	121	120	113	114	109	103	89	118	Point	-

Project: Great Bear Resources Ltd.
Location: Red Lake, ON

DieselGen_800kW_Case	DieselGen_800kW_Case--CAT3516B at 800kW -- Emergency	-	113	122	131	122	116	115	112	116	125	Point	-
DieselGen_800kW_ex	DieselGen_800kW_ex--	-	118	133	129	121	120	121	121	119	128	Point	-
DieselGen_ex_2250kw	Diesel Generator Exhaust 2250kW-- CAT3516B -- Emergency	-	-	124	116	113	118	124	125	125	130	Point	-
DieselGen_ex_500kw	Diesel Generator Exhaust 500kW-- CAT C15 GC -- Emergency	-	-	123	128	122	118	114	108	101	124	point	-
DieselGen_mech_2250kw	Diesel Generator Mechanical Case 2250kW-- CAT3516B -- Emergency	-	-	100	101	103	106	104	100	117	117	Point	-
DieselGen_mech_500kw	Diesel Generator Mechanical Case 500kW-- CAT C15 GC -- Emergency	-	-	103	101	94	90	88	84	80	97	point	-
DieselMineTruck	Diesel Mine Truck -- XCMG XDA40	-	97	102	105	100	98	95	89	83	103	Line	22.6
DieselPump_HL250M	Diesel Pump--HL250M	76	77	78	80	80	83	80	76	70	87	Point	-
DistributionTransformer_150kVA	150 kVA--Distribution Transformer	54	60	62	57	57	51	46	41	34	58	point	-
Dozer_BladeNWinch	Dozer W/ Blade and Winch--	118	122	125	122	112	109	104	99	93	117	Area	-
Dozer_CAT_D10	Dozer - D10--CAT D10	117	121	124	121	111	108	103	98	92	116	Area	-
Dozer_CAT_D6	Dozer - D6--CAT D6	114	118	121	118	108	105	100	95	89	113	Area	-
Dozer_CAT_D8	Dozer--CAT D8	118	122	125	122	112	109	104	99	93	117	Area	-
Dozer_LGP_D4	Dozer LGP--D4	110	114	117	114	104	101	96	91	85	109	Area	-
DozerWinch_CATD8	Dozer Winch --CAT D8	118	122	125	122	112	109	104	99	93	117	Area	-
DrumRoller_66in	Drum Roller--66"	108	112	115	114	105	102	97	91	86	109	Area	-
DrumRollerManual	Manual Drum Roller	97	93	98	97	95	98	103	100	93	107	Point	-
DumperTruck	Dumper Truck	96	101	103	102	103	103	101	97	91	108	Line	22.6
DumpTruck_40t	Dump Truck 40T --CAT 740B	118	122	125	122	112	109	104	99	93	117	Line	22.6
DumpTruck_CAT735B	Dump Truck --CAT 735B	115	120	114	117	112	110	107	101	95	115	Line	22.6
DustColletor_6000cfm	6000 CFM Fan--Dust Collector	106	107	108	109	109	109	107	103	102	113	point	-
EJ_ArticulatedTruck_CAT740	EJ Articulated Trucks--CAT 740	-	114	114	117	112	110	107	101	95	115	Line	22.6
EmergencySumPump	Emergency Sources--Emergency Sump Pump - Paste (Backfill) Plant - Indoors	93	93	95	97	100	100	99	94	87	105	Point	-
Excavator_120t	Excavator--120t	100	104	107	104	94	91	86	81	75	99	Point	-
Excavator_35t	Excavator--35t	106	110	113	110	100	97	92	87	81	105	Point	-
Excavator_CAT330	Excavator Hydraulic--CAT330	0	121	115	110	100	95	91	85	91	105	Area	-
Excavator_CAT336	Excavator--CAT 336	106	110	113	110	100	97	92	87	81	105	Point	-
Excavator_CAT374	Excavator--CAT 374	108	112	115	112	102	99	94	89	83	107	Point	-
Excavator_CATD6	EX Dozer--CAT D6	114	118	121	118	108	105	100	95	89	113	Area	-
FilterAreaSumPump	Paste Plant (Backfill) Indoors--Filter Area Sump Pump	83	84	86	88	91	91	90	85	77	96	Point (Part of Cumulative)	-
FilterCakeConveyor_PastePlant	Paste Plant (Backfill) Indoors--Filter Cake Conveyor	79	78	79	77	76	77	75	71	64	81	Point (Part of Cumulative)	-
FilterFeedPump	Paste Plant (Backfill) Indoors--Filter Feed Pump	83	84	86	88	91	91	90	85	77	96	Point (Part of Cumulative)	-
FiltratePump_PastePlant	Paste Plant (Backfill) Indoors--Filtrate Pump 1	81	81	84	86	88	89	87	82	75	93	Point (Part of Cumulative)	-
FiltrateSpillageReturnPump_PastePlant	Paste Plant (Backfill) Indoors--Filtrate and Spillage Return Pump	78	78	81	83	85	86	85	80	72	90	Point (Part of Cumulative)	-
FlatBedBoomTruck_HX620	Flat Bed or Boom Truck --	96	101	103	102	103	103	101	97	91	108	Line	22.6
FlatBedTruck_10t	Truck Flatbed--10t	92	97	99	98	99	99	97	93	87	104	Point	-
FlatDeckTruck	Flat Deck Truck--FlatDT	96	101	103	102	103	103	101	97	91	108	Line	22.6
FlotationTailingsOverflowPump	Flotation Tailings Thickener Overflow Pump	95	95	98	100	102	103	102	97	89	107	Point	-
FlotationTailingThickenerPump	Flotation Tailings Thickener Feed Pump, 160kW--Outside building	98	98	101	103	106	106	105	100	92	110	Point	-
Forklift_CAT_DP4055	Forklift--Cat DP40-55(C)N3, 5.5t	106	109	112	101	92	89	84	78	73	99	Point	-
FrontLoader_CAT966	Front End Loader (smaller)--CAT 966	115	116	122	112	102	99	94	89	83	109	Point	-
FrontLoader_CAT993	Front End Loader--CAT993	117	121	124	121	111	108	103	98	92	116	Point	-
FuelTankerTruck_CAT740	Fuel Tanker Truck (30,000 L)--CAT 740	95	98	101	98	92	96	95	85	76	100	Line	22.6
FurnaceBagDustCollector	FurnaceBag Dust Collector	104	103	98	95	93	96	99	95	93	103	Point	-
FusionMachine_RD250	Fusion Machine--Ritmo Delta 250	-	77	79	86	86	95	100	98	95	105	Point	-
GenieForklift_4t	FORKLIFT--Genie 4 ton Ext boom	119	110	116	106	96	93	88	83	77	103	Point	-
Genset_13kVA	Genset-- 13kVA	-	111	104	95	83	81	74	69	57	92	Point	-
Genset_75k	Genset--75kVA	-	110	98	100	95	93	91	87	85	99	Point	-
GlandWaterPump_PastePlant	Paste Plant (Backfill) Indoors--Gland Water Pump	75	76	78	80	82	83	81	76	69	87	Point (Part of Cumulative)	-
GroutPlant_CG630E	Grout Plant--CG630E	62	62	65	67	70	70	69	64	56	75	Point	-
HaulTruck_777	Haul Truck--CAT 777F	120	124	127	126	117	114	109	103	98	121	Line	22.6
HaulTruck_785	Haul Truck--CAT 785	120	124	127	126	117	114	109	103	98	121	Line	22.6
HeaterIF_350kBTU	Heater--Indirect Fire 350000 BTU	108	108	97	101	96	96	97	90	86	102	Point	-
HighCuberTruck_F650	High Cube Truck--Ford F-650 SD DIESEL	88	93	95	94	95	95	93	89	83	99	Line	22.6
HighPressureCleaningPump_CRF	CRF Plant--High Pressure Cleaning Pump	83	84	86	88	91	91	90	85	77	96	Point (Part of Cumulative)	-
HighPressureCleaningPump_PastePlant	Paste Plant (Backfill) Indoors--High Pressure Cleaning Pump	76	76	78	80	83	83	82	77	70	88	Point (Part of Cumulative)	-
HoseUpWaterPump_PastePlant	Paste Plant (Backfill) Indoors--Hose-Up Water Pump	78	78	81	83	85	86	85	80	72	90	Point (Part of Cumulative)	-
HVAC_inlet	HVAC_inlet--	101	94	91	91	91	89	86	83	77	94	Point	-
HVAC_outlet	HVAC_outlet--	88	86	85	89	90	82	77	68	61	89	Point	-
HydraulicPowerPack_PastePlant	Paste Plant (Backfill) Indoors--Hydraulic Power Pack	98	99	100	100	100	100	100	99	97	106	Point (Part of Cumulative)	-
IntegratedToolCarrier_WA200	Integrated Tool Carrier--WA200-7	108	111	117	107	97	94	89	83	78	104	Area	-
JawCrusherDustCollector	Dust Collector for Jaw Crusher feeder	104	103	98	95	93	96	99	95	93	103	Point	-
JLG_125ft	JLG--125feet	125	116	122	112	102	99	94	89	83	109	Point	-
LeachBlower_280kW	Leach Blower, 280kW--6000 cfm inside building	92	89	88	84	79	77	73	69	62	82	Point	-
LeachTankAgitator_150kW	Leach Tank Agitator, 150kW--Outside building	89	89	92	94	97	97	96	91	83	102	Point	-
LiftTruck_2halfTON	Lift Truck 2.5t--MH25-4, 4x4, 60HP	120	111	117	107	97	94	89	84	78	104	Point	-
LightTower_	Light Tower Diesel	93	100	98	95	86	86	85	83	76	93	Point	-
LimeSiloDustCollector	Lime Silo Dust Collector	104	103	98	95	93	96	99	95	93	103	Point	-
LinearVibratoryScreen	Inside building--Linear Vibratory Screen x 3	100	100	94	91	91	89	87	83	78	94	Point (Part of Cumulative)	-
Loader_CAT950	Loader--CAT950	108	112	115	114	105	102	97	91	86	109	Point	-
Loader_CAT966	Loader (FEL)--CAT 966	0	99	105	103	102	103	102	100	103	109	Line	22.6

Project: Great Bear Resources Ltd.
Location: Red Lake, ON

Loader_CAT992	Loader CAT 992	115	119	122	121	112	109	103	98	93	116	Point	-
LowboyNTractor_75t	Lowboy and Tractor--75ton - 100ton	92	97	99	98	99	99	97	93	87	104	Line	22.6
MainPowerTransformer_45MVA	45 MVA--Main Power Transformer 1	90	96	98	93	93	87	82	77	70	93	Point (Part of Cumulative)	-
MainPowerTransformer_60MVA	60 MVA--Main Power Transformer 2	92	98	100	95	95	89	84	79	72	95	Point (Part of Cumulative)	-
MainSubstation	Main Substation Lw Area; Transformer + distribution trans	94	100	102	97	97	91	86	81	74	97	point	-
ManliftArticulated_60ft	Manlift Articulating--60feet	120	111	117	107	97	94	89	84	78	104	Point	-
ManliftRemoteTerrain_18m	Manlift 18m-- 600 AJ JLG Diesel, RT	120	111	117	107	97	94	89	84	78	104	Point	-
MechanicsTruck	Mechanics Truck--Mtruck	88	93	95	94	95	95	93	89	83	99	Line	22.6
MiniExcavator_CAT305	Mini Excavator--Cat 305D CR	100	104	107	104	94	91	86	81	75	99	Point	-
MobileCrane_150t	150t Mobile Crane--MobCrane150t	110	110	108	105	107	103	100	91	86	108	Point	-
MobileCrane_50t	50t Mobile Crane--Tadano GR-500XL	113	117	120	117	107	104	99	94	88	112	Point	-
NaturalGasGen_1300kW_all	NG_1300kW_all--Natural Gas Generator; for both case and exhaust	100	100	115	111	103	102	103	103	101	110	Point	-
NaturalGasGen_3MW	3.3MW Natural Gas Generator--Natural Gas Generators	102	105	106	106	106	104	102	99	94	109	point	-
NaturalGasReciprocating5MW_case	5 MW Natural Gas-Fired Reciprocating Engine Casing	115	121	124	122	118	118	118	122	121	127	Point	-
NaturalGasReciprocating5MW_ex	5 MW Natural Gas-Fired Reciprocating Engine outlet-- Exhaust	-	141	142	139	137	132	130	128	119	139	Point	-
OreControlDrill_E100	Ore Control Drill--Explorac E100	-	117	125	110	111	112	111	108	106	118	Point	-
OverHeadCrane	Paste Plant (Backfill) Indoors--Overhead Crane	98	98	87	91	86	86	87	80	76	92	Point (Part of Cumulative)	-
PasteAreaSumPump	Paste Plant (Backfill) Indoors--Paste Area Sump Pump	83	84	86	88	91	91	90	85	77	96	Point (Part of Cumulative)	-
PastePlantDustCollector	Paste Plant Dust Collector	104	103	98	95	93	96	99	95	93	103	Point	-
PastePlantFacade_1	Paste Plant facade 1--	117	117	113	104	101	100	99	95	90	106	Verticleicle Area	-
PastePlantFacade_2	Paste Plant facade 2--	119	118	114	105	103	101	100	96	91	107	Verticleicle Area	-
PastePlantFacade_3	Paste Plant facade 3--	117	117	113	104	101	100	99	95	90	106	Verticleicle Area	-
PastePlantFacade_4	Paste Plant facade 4--	119	118	114	105	103	101	100	96	91	107	Verticleicle Area	-
PastePlantFacade_Top	Paste Plant top--	119	119	115	106	103	102	101	97	92	108	Area	-
PastePlantMixer	Paste Plant (Backfill) Indoors--Paste Mixer	91	93	95	95	95	95	95	92	85	101	Point (Part of Cumulative)	-
Pebble_Crush	Pebble Crusher, 220kW--Inside building	-	124	133	124	115	109	109	107	110	121	Point (Part of Cumulative)	-
PlantNInstrumentAirCompressor	Inside building--Plant & Instrument Air Compressor	100	96	101	100	98	101	106	103	96	110	Point (Part of Cumulative)	-
PickUp_F150	Pick-up--F150	88	93	95	94	95	95	93	89	83	99	Line	22.6
PlantNaturalGasGen5MW_case	Natural Gas generator Casing--5MW - Gas Turbine - Casing	110	112	114	114	114	113	112	111	110	119	point	-
PlantNaturalGasGen5MW_ex	Natural Gas generator Exhaust--5MW - Gas Turbine - Exhaust	128	132	134	134	133	131	129	125	119	136	point	-
PlantNaturalGasGen5MW_inlet	Natural Gas generator Inlet--5MW - Gas Turbine - Inlet	119	120	121	121	124	130	135	135	132	140	point	-
PortableDieselGenset_3k	Portable Genset Diesel--3k	-	106	94	96	91	89	87	83	81	95	Point	-
PortableWaterTruck	Portable Water Truck--PoWT	95	98	101	98	92	96	95	85	76	100	Line	22.6
PowerPlant_Top	Power Plant top--	128	134	131	112	101	89	90	91	90	116	Area	-
PowerPlant_Top_clo	Power Plant top closure	123	129	126	107	96	84	85	87	85	111	Area	-
PowerPlantFacade_1	Power Plant facade 1--	120	125	122	103	92	80	81	83	81	107	Area	-
PowerPlantFacade_1_clo	Power Plant facade 1 closure	115	120	118	98	88	75	76	78	77	103	Area	-
PowerPlantFacade_2	Power Plant facade 2--	125	131	128	109	98	86	87	88	87	113	Area	-
PowerPlantFacade_2_clo	Power Plant facade 2 closure	120	126	123	104	93	81	82	84	82	108	Area	-
PowerPlantFacade_3	Power Plant facade 3--	120	125	122	103	92	80	81	83	81	107	Area	-
PowerPlantFacade_3_clo	Power Plant facade 3 closure	115	120	118	98	88	75	76	78	77	103	Area	-
PowerPlantFacade_4_Half	PwrPla_f4_Half--	123	128	126	115	110	108	108	112	111	118	Area	-
PowerPlantFacade_4_Half_clor	PwrPla_f4_Half_closure	118	123	121	110	105	103	103	107	106	113	Area	-
PowerPlantFacade_4_Lou	PwrPla_f4_Lou--	133	139	140	137	132	130	130	134	133	139	Area	-
PowerPlantFacade_4_Lou_clo	Power Plant facade 4 Louver closure	128	134	135	132	127	125	125	130	128	135	Area	-
PreleachThickenerPump	Horizontal centrifugal slurry--Pre-leach Thickener Underflow Pump 1	98	98	101	103	105	106	104	99	92	110	Point	-
PrimaryCrusher	Crusher generator Crusher--Primary Crusher	-	125	134	125	116	110	110	108	111	123	Area	-
PrimaryCrusher_Top	Primary Crusher Top--	114	124	132	117	102	94	93	90	93	117	Area	-
PrimaryCrusherFacade_1	Primary Crusher facade 1--	118	127	135	120	105	97	96	94	96	120	Verticleicle Area	-
PrimaryCrusherFacade_2	Primary Crusher facade 2--	115	125	132	118	102	95	94	91	94	117	Verticleicle Area	-
PrimaryCrusherFacade_3	Primary Crusher facade 3--	118	127	135	120	105	97	96	94	96	120	Verticleicle Area	-
PrimaryCrusherFacade_4	Primary Crusher facade 4--	112	121	129	114	99	91	90	87	90	114	Verticleicle Area	-
PrimaryCrusherFacade_4_binOp	PriCru_fac_4_binOp--	112	121	127	118	108	101	99	97	100	115	Verticleicle Area	-
PrimaryDril_D65	Primary Drill--140mm SmartRoc D65	-	124	132	117	118	119	118	115	113	125	Point	-
ProcessPlant_Top	Proces Plant Input Top--	117	120	111	105	104	101	101	97	92	108	Area	-
ProcessPlantFacade_1	Proces Plant Input Facade 1--	111	114	105	99	97	95	94	91	86	101	Verticleicle Area	-
ProcessPlantFacade_2	Proces Plant Input Facade 2--	115	118	109	103	101	99	98	95	90	105	Verticleicle Area	-
ProcessPlantFacade_3	Proces Plant Input Facade 3--	111	114	105	99	97	95	94	91	86	101	Verticleicle Area	-
ProcessPlantFacade_4	Proces Plant Input Facade 4--	115	118	109	103	101	99	98	95	90	105	Verticleicle Area	-
ProcessWaterPump_250kW	Process Water Pump, 250kW--Inside building	100	100	103	105	107	108	107	102	94	112	Point	-
ProductionDrill_PV235	Production Drill--Epiroc Pit Viper PV235	0	117	125	110	111	112	111	108	106	118	Point	-
QuarrtSourceLoader_L1350	Quarry Source - Production Loader--L-1350 (23m3)	119	123	126	125	116	113	108	102	97	120	Area	-
QuarrySource_Backhoe_PC1250	Quarry Source - Production Backhoe--PC1250 (6.7m3)	111	115	118	115	105	102	97	92	86	110	Area	-
RawWaterPump_CRF	CRF Plant--Raw Water Pump	81	81	84	86	88	89	87	82	75	93	Point (Part of Cumulative)	-
ReclaimWaterPump	Inside building--Reclaim Water Pump 1	97	97	100	102	105	105	104	99	91	110	Point (Part of Cumulative)	-
RemoteTerrainCrane_80t	RT Crane 80T--	107	107	105	102	104	100	97	88	83	105	Point	-
RigidTruck_150t	Rigid Truck--150t	120	124	127	126	117	114	109	103	98	121	Line	22.6
RoadGrader_CAT16	Road Grader--CAT 16	102	107	112	110	108	107	102	98	93	111	Line	22.6
RockBreaker_BX40	Rock Breaker, 112kW--Inside/outside building; [BX40 - MRH / MRHT Model or equivalent]	117	121	124	121	112	109	103	98	93	116	Point (Part of Cumulative)	-
RockCrusher_UD211	Rock Crusher--Sandvik UD211	-	124	133	124	115	109	109	107	110	121	Point	-
SacrificialConveyorDustCollector	Sacrificial Conveyor to Stockpile Feed Conveyor Dust Collector	104	103	98	95	93	96	99	95	93	103	Point	-

SAG_mill_700kW	SAG Mill, 7000kW--Inside building	108	116	109	109	107	105	101	95	86	110	Point (Part of Cumulative)	-
ScissorLift_13m	Scissor lift--13.1 m capacity, 4X4	125	116	122	112	102	99	94	89	83	109	Point	-
ServicePlatformTruck_20ft	20' Service Platform Truck--	96	101	103	102	103	103	101	97	91	107	Point	-
SewageCollectionTruck	Sewage Collection Truck--SewColTruck	95	98	101	98	92	96	95	85	76	100	Line	22.6
SheetPilingRig_singlebandnoise	Sheet Piling Rig--Single 500Hz band noise	-	-	-	-	133	-	-	-	-	129	Point (Singlular Band; Impulsive)	-
Shovel10m3	Shovel 10.0 m3--CAT 6015	115	119	122	119	109	106	101	96	90	114	Point	-
Shovel12m3	Shovel 12.0 m3--CAT 6020	117	121	124	121	111	108	103	98	92	116	Area	-
Shovel16m3	Shovel 16.5 m3--CAT 6030	118	122	125	122	112	109	104	99	93	117	Point	-
Skidder_JD640	Skidder--JD 640L	117	120	127	116	107	104	99	93	88	114	Point	-
SkidSteer_650	Skid Steer--Bobcat S650	105	108	114	104	94	91	86	80	75	101	Point	-
SkidSteer_ProcessPlant	Skidsteer--	107	107	98	102	102	98	97	91	85	104	Point	-
SkidSteerLoader_CAT252	Skid Steer Loader--Cat 252B - Bucket & Fork	86	91	107	104	100	100	96	91	83	105	Point	-
SnapAirBlower_PastePlant	Paste Plant (Backfill) Outdoors--Snap Air Blower 1	78	75	74	70	65	63	59	55	48	68	Point	-
SnowWaterTruck_T880	Snow Plow/Water Truck--T880	99	102	102	106	101	101	102	95	91	107	Line	22.6
StockConveyor	Stockpile Conveyor--w=1.35m; l=183m; 28.1m rise	88	87	88	86	85	86	84	80	73	90	Line	-
SubstationArea	Substation Area cumulative	94	100	102	97	97	91	86	81	74	97	Area	-
SumpPump_CRF	CRF Plant--Sump Pump	79	79	82	84	86	87	85	80	73	91	Point (Part of Cumulative)	-
TailingsPastePlantPump	Tailings to Paste Plant Pump 1	95	95	98	100	102	103	102	97	89	107	Point	-
TailingsPump	Tailings Pump	96	96	98	100	103	103	102	97	90	108	Point	-
TailingsStorageTankAgitator	Paste Plant (Backfill) Outdoors--Tailings Storage Tank Agitator	89	89	92	94	97	97	96	91	83	102	Point	-
TandemWaterTruck_2500	Tadem Water Trucks-- 2500 gls	93	98	100	99	100	100	98	94	88	104	Line	22.6
TankAgitator	Cyanide Destruction Tank 1 Agitator	89	89	92	94	97	97	96	91	83	102	Point	-
Telehandler	Telehandler--	122	113	119	109	99	96	91	86	80	106	Point	-
Telehandler_CAT1055	Telehandler--Cat TL1055	122	113	119	109	99	96	91	86	80	106	Point	-
TerexCraneRT_70t	Crane 70t--Terex RT670	107	107	105	102	104	100	97	88	83	105	Point	-
TerexCraneRT_SJ_55t	Crane 55t--Terex RT555, 2-Stage Jib	110	110	108	105	107	103	100	91	86	108	Point	-
ThickenerRecirculatingPump	Paste Plant (Backfill) Outdoors--Thickener Recirculation Pump	88	88	91	93	96	96	95	90	82	100	Point	-
ThickUFPump_PastePlant	Paste Plant (Backfill) Outdoors--Thickener UF Pump	88	88	91	93	96	96	95	90	82	100	Point	-
TireManipulator_WA500	Tire Manipulator--WA-500-7	111	116	122	112	102	99	94	88	83	109	Point	-
TLB_CAT422	TLB--Cat 422F2	103	106	112	102	92	89	84	78	73	99	Point	-
TransferTowerPebbleCrusher_F1	Transfer Tower Pebble Crusher facade 1	-	123	132	115	99	90	90	88	91	117	Verticleicle Area	-
TransferTowerPebbleCrusher_F2	Transfer Tower Pebble Crusher facade 2	-	122	131	114	98	89	89	87	90	116	Verticleicle Area	-
TransferTowerPebbleCrusher_F3	Transfer Tower Pebble Crusher facade 3	-	123	132	115	99	90	90	88	91	117	Verticleicle Area	-
TransferTowerPebbleCrusher_F4	Transfer Tower Pebble Crusher facade 4	-	122	131	114	98	89	89	87	90	116	Verticleicle Area	-
TransferTowerPebbleCrusher_Top	Transfer Tower Pebble Crusher Top	-	122	131	114	98	89	89	87	90	116	Area	-
Transformer_600kVA	600 kVA--Transformer	63	69	71	66	66	60	55	50	43	66	Point	-
UG_BusPersonnel	UG Bus passenger	87	92	94	93	94	94	92	88	82	99	Line	22.6
UG_CRFTruck	UG CRF Truck	103	106	106	110	105	105	106	99	95	111	Line	22.6
UG_EmulsionCarrier	UG Emulsion Dev-carrier	105	108	108	112	107	107	108	101	97	113	Line	22.6
UG_EmulsionProductionCarrier	UG Emulsion Prod-carrier	95	91	96	95	93	96	101	98	91	105	Line	22.6
UG_FuelNLube	UG Boom Truck	79	82	88	94	93	89	95	95	87	100	Line	22.6
UG_Grader	UG Grader	102	107	112	110	108	107	102	98	93	111	Line	22.6
UG_JeepPersonnel	UG Jeep personnel carrier	88	93	95	94	95	95	93	89	83	99	Line	22.6
UG_JeepVehicle	UG Jeep maintenance vehicle	88	93	95	94	95	95	93	89	83	99	Line	22.6
UG_MobileCrane	UG Terrain mobile crane	99	103	106	103	93	90	85	80	74	98	Line	22.6
UG_RoughTerrainForklift	UG Rough Terrain Forklift	119	110	116	106	96	93	88	82	77	103	Line	22.6
UG_ScissorLift	UG Scissor lift	113	116	122	112	102	99	94	88	83	109	Line	22.6
UG_ShotcreteSprayer	UG Shotcrete Sprayer	98	103	105	104	105	105	103	99	93	110	Line	22.6
UG_TractorForkBackhoe	UG Tractor with Fork and Backhoe	108	111	114	109	99	94	90	84	80	104	Line	22.6
UG_TransMixer	UG Transmixer	96	99	99	103	98	98	99	92	88	104	Line	22.6
UG_WaterSpryer	UG Water spryer w/carrier	108	111	117	107	97	94	89	84	78	104	Line	22.6
UGTruck_50t	UG Truck 50t	-	97	102	105	100	98	95	89	83	104	Line	22.6
UGTruck_Boom	UG Boom Truck	98	103	105	104	105	105	103	99	93	110	Line	22.6
VaccumPump_PastePlant	Paste Plant (Backfill) Indoors--Vaccum Pump 1	99	99	102	104	107	107	106	101	93	111	Point (Part of Cumulative)	-
VentiationFan_Discovery_FAR	UG ventilation for Discovery Fresh Air Raise	119	120	121	122	122	122	120	116	115	127	Point	-
VentiationFan_Discovery_RAR	UG ventilation for Discovery Return Air Raise	117	118	119	120	120	120	118	114	113	125	Point	-
VentilationFan_AEX	VentFan_aex--UG AEX Portal Ventilation Fan	121	122	123	124	124	124	122	118	117	129	Point	-
VentilationFan_HingeNLimb_FAR2	UG ventilation for Hinge and Limb Fresh Air Raise 2	122	123	124	125	125	125	123	119	118	130	Point	-
VentilationFan_HingeNLimb_RAR	UG ventilation for Hinge and Limb Return Air Raise	115	116	117	118	118	118	116	112	111	123	Point	-
VentilationFan_LP_HingeNLimb_FAR1	VF_LP_HL_FAR1--LP Fresh Air Raise	122	123	124	125	125	125	123	119	118	129	Point	-
VentilationFan_LP_RAR1	VF_LP_RAR1--LP Return Air Raise	124	125	126	127	127	127	125	121	120	131	Point	-
VentilationFan_LP_RAR2	VF_LP_RAR2--LP Return Air Raise	122	123	124	125	125	125	123	119	118	129	Point	-
VentilationFan_VIGGO_FAR	VF_VIG_FAR--Viggo Fresh Air Raise	102	103	104	105	105	105	103	99	98	110	Point	-
VentilationFan_VIGGO_RAR	VF_VIG_RAR--Viggo Return Air Raise	112	113	114	115	115	115	113	109	108	120	Point	-
VibratingGrizzlyScreen_15kW	Vibrating Grizzly Screen, 15kW--Inside building	100	100	94	91	91	89	87	83	78	94	Point (Part of Cumulative)	-
VibratingPlateCompactor	Vibrating Plate Compactor--600mm x 600mm	98	94	99	98	96	99	104	101	94	108	Point	-
VortexMixerFeedPump_PastePlant	Paste Plant (Backfill) Indoors--Vortex Mixer Feed Pump	83	84	86	88	91	91	90	85	77	96	Point (Part of Cumulative)	-
VortexMixerScrewConve_PastePlant	Paste Plant (Backfill) Indoors--Vortex Mixer Screw Conveyor	68	67	68	66	65	66	64	60	53	70	Point (Part of Cumulative)	-
WaterServicesPump_PastePlant	Paste Plant (Backfill) Indoors--Water Services Pump	83	84	86	88	91	91	90	85	77	96	Point (Part of Cumulative)	-
WaterTruck_CAT740	Water Truck (30,000 L)--CAT 740	95	98	101	98	92	96	95	85	76	100	Line	22.6
WaterTruck_CAT745	Truck (Water) --	-	122	124	124	117	113	108	101	93	120	Line	22.6

WeldMachine_Vantage400	Welding Machine--Vantage 400	99	106	104	101	92	92	91	89	82	99	Point	-
WheelLoader_CAT844	Wheel Loader--CAT 844 RTD	115	116	122	112	102	99	94	89	83	109	Point	-
WheelLoader_CAT950	Wheel Loader with Quick Coupler--Cat 950H	108	112	115	114	105	102	97	91	86	109	Point	-
WheelLoader_MineInfra_CAT950	Wheel Loader--	108	112	115	114	105	102	97	91	86	109	Point	-
ZoomBoomTruck	Zoom Boom--	122	113	119	109	99	96	91	86	80	106	Point	-

Appendix B

Land Tenure Map

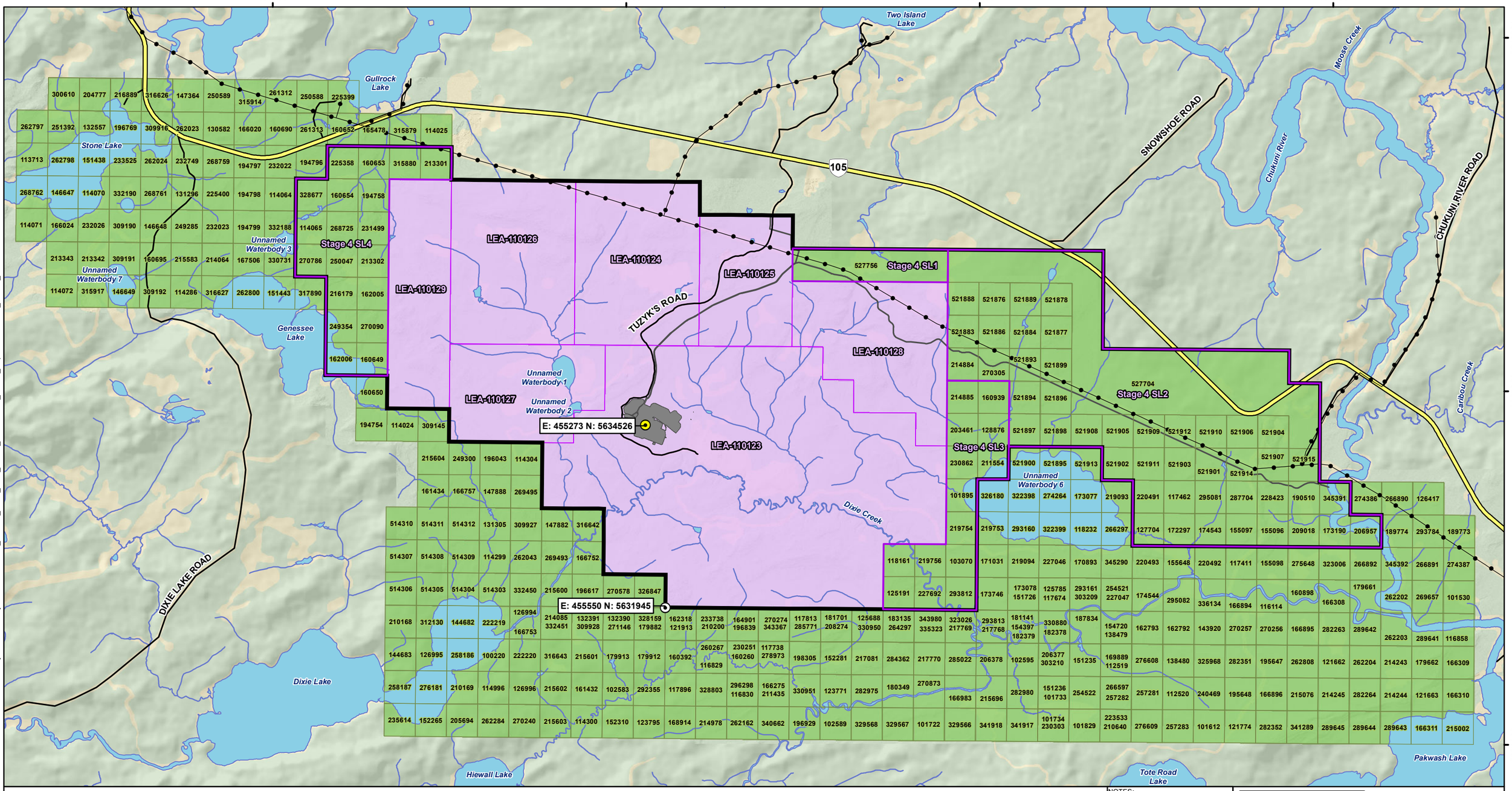

X:\CA\CAOAK300-OAK\MIS-FS1-Project\F\2023\Projects\OMEMA2303_Kinross_Great_Bear_Envtl7_GIS\Arl\AEX_ESDM_Report\MXD\Land_Tenure_4.mxd

LEGEND

- Property Boundary
- Front Entrance
- Southwest Corner of Property
- Advanced Exploration Footprint
- Power Line
- Highway
- Local Road
- Watercourse
- Waterbody

Great Bear Resources Land Tenure

- Lease (Mining and Surface Rights)
- Requested Lease #4
- Claim

0 0.5 1 2 3 4 5 Kilometres

NOTES:
- Base data acquired from Land Information Ontario (MNRF), 2022.
- Roads information provided by Kinross, August 2022.
- Property boundaries and land tenure provided by Kinross, February 2024.
- Proposed project footprint provided by Kinross, October 2023.
- Watercourses and waterbody acquired from Land Information Ontario (MNRF) and modified to match aerial imagery and LiDAR.

Datum: NAD83
Projection: UTM Zone 15N

KINROSS

wsp

GREAT BEAR AEX PROGRAM

Property Boundary

PROJECT N°: OMEMA2303 | **FIGURE: C2**

SCALE: 1:51,000 | DATE: April 2024

Appendix C

Assessment Figures

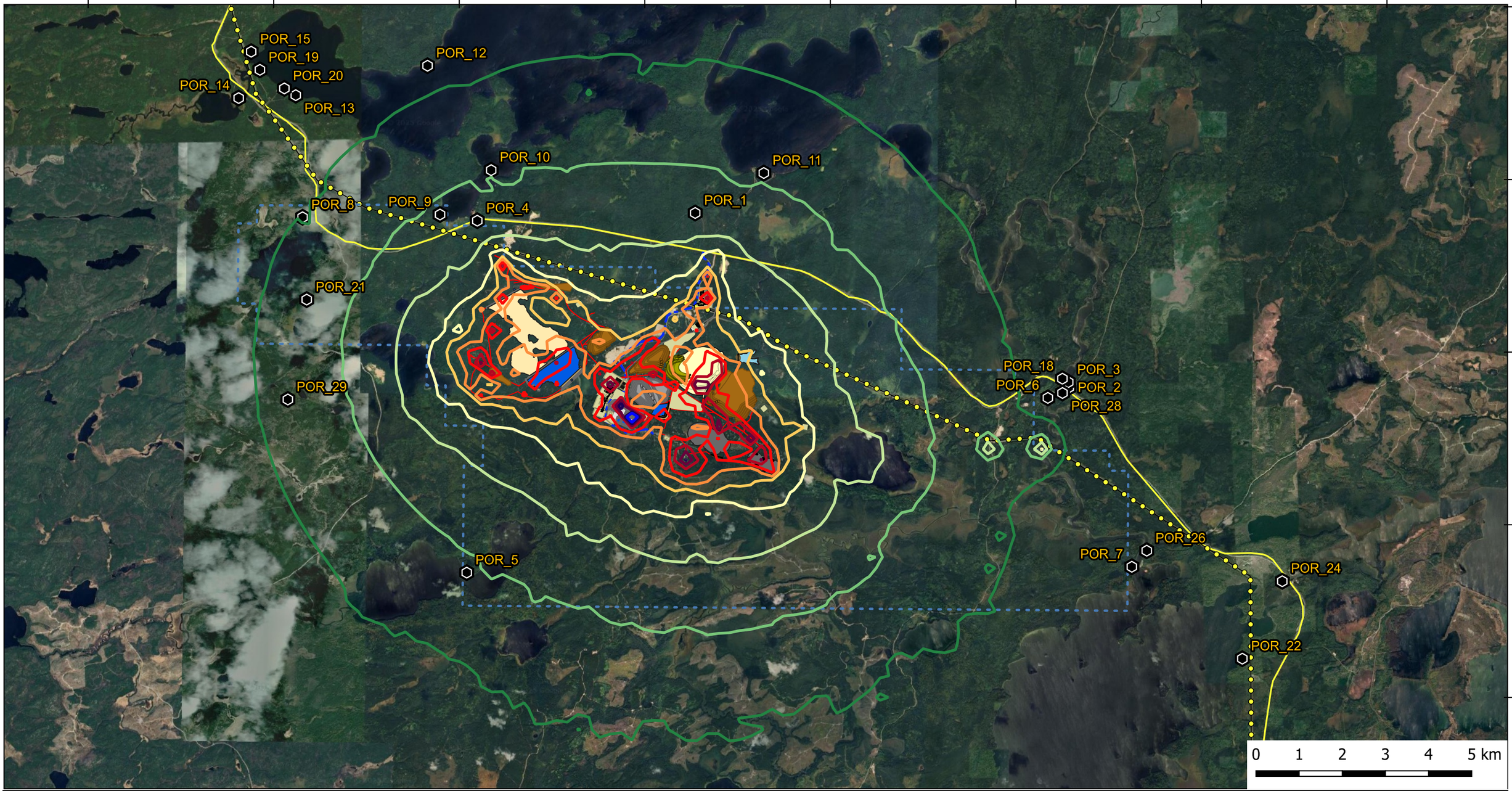

LEGEND

- Highway 105
- Property Boundary
- Powerline 115 kV
- Point of Reception

NOISE LEVELS (dBA) 35 40 45 50 55 60 65 70 75 80

Notes:
- "POR" (Point Of Reception) provided by Kinross May 2025
- Site Plan provided by Kinross in June 2025

Datum & Projection:
NAD83 / UTM zone 15N

KINROSS wood.

Great Bear Resources
Noise Assessment

Daytime Noise Contours
Construction Phase

PROJECT NO: CA03912	FIGURE C-1
SCALE: 1:85220	DATE: August 2025

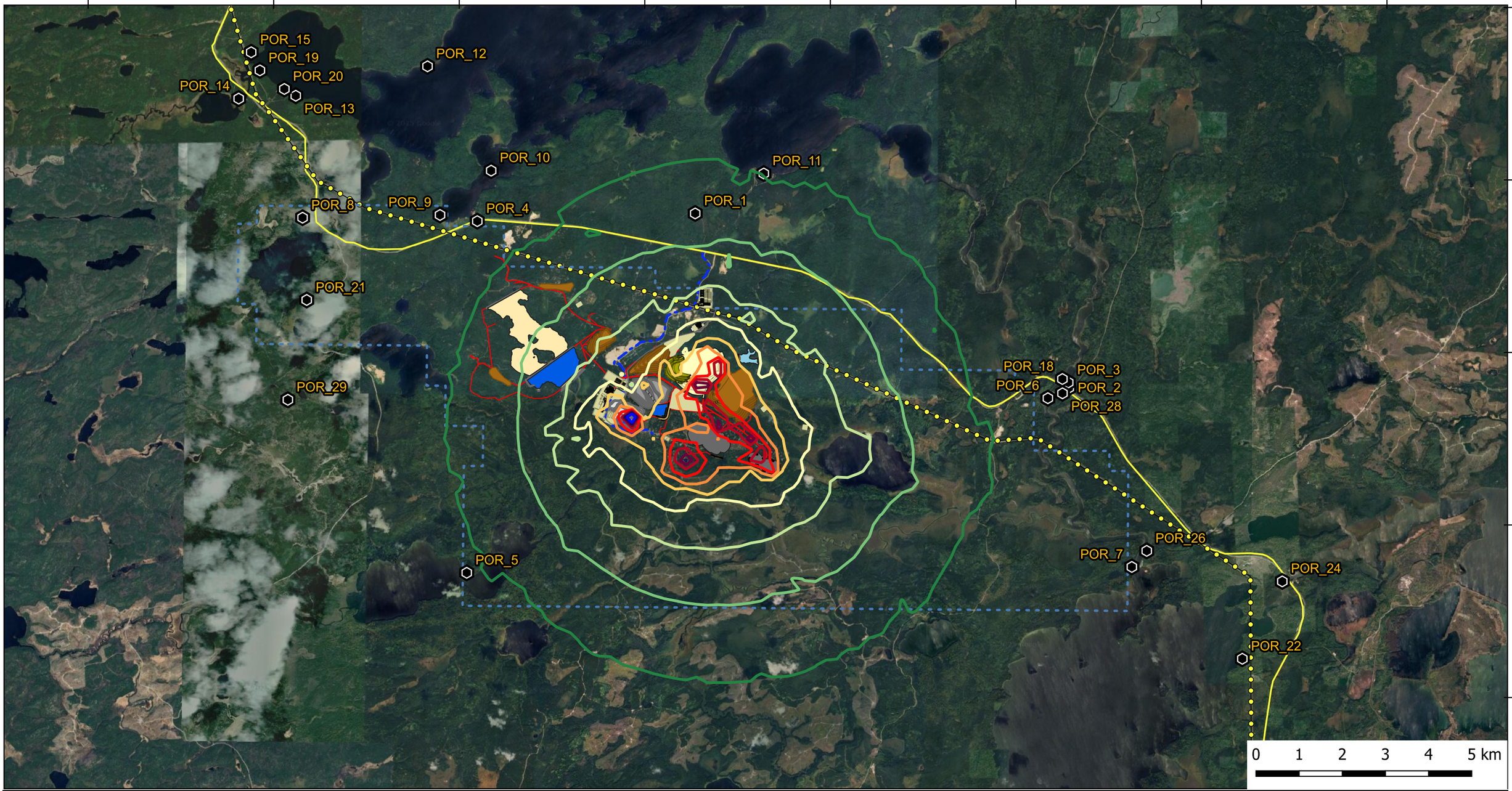

LEGEND

- Highway 105
- Property Boundary
- Powerline 115 kV
- Point of Reception

NOISE LEVELS (dBA) 35 40 45 50 55 60 65 70 75 80

Notes:
- "POR" (Point Of Reception) provided by Kinross May 2025
- Site Plan provided by Kinross in June 2025

Datum & Projection:
NAD83 / UTM zone 15N

KINROSS wood.

Great Bear Resources
Noise Assessment

Nighttime Noise Contours
Construction Phase

PROJECT NO: CA03912	FIGURE C-2
SCALE: 1:85220	DATE: August 2025

442900 447200 451500 455800 460100 464400 468700 473000

5644000 5640000 5636000 5632000 5628000

POR_15 POR_19 POR_20 POR_14 POR_13 POR_12 POR_10 POR_11 POR_8 POR_9 POR_4 POR_1 POR_21 POR_29 POR_18 POR_3 POR_6 POR_2 POR_28 POR_26 POR_7 POR_24 POR_22 POR_5

0 1 2 3 4 5 km

LEGEND

- Highway 105
- Property Boundary
- Powerline 115 kV
- Point of Reception

NOISE LEVELS (dBA) 35 40 45 50 55 60 65 70 75 80

Notes:
- "POR" (Point Of Reception) provided by Kinross May 2025
- Site Plan provided by Kinross in June 2025

Datum & Projection:
NAD83 / UTM zone 15N

KINROSS wood.

Great Bear Resources
Noise Assessment

Daytime Noise Contours
Peak Production Phase

PROJECT NO: CA03912	FIGURE C-3
SCALE: 1:85220	DATE: August 2025

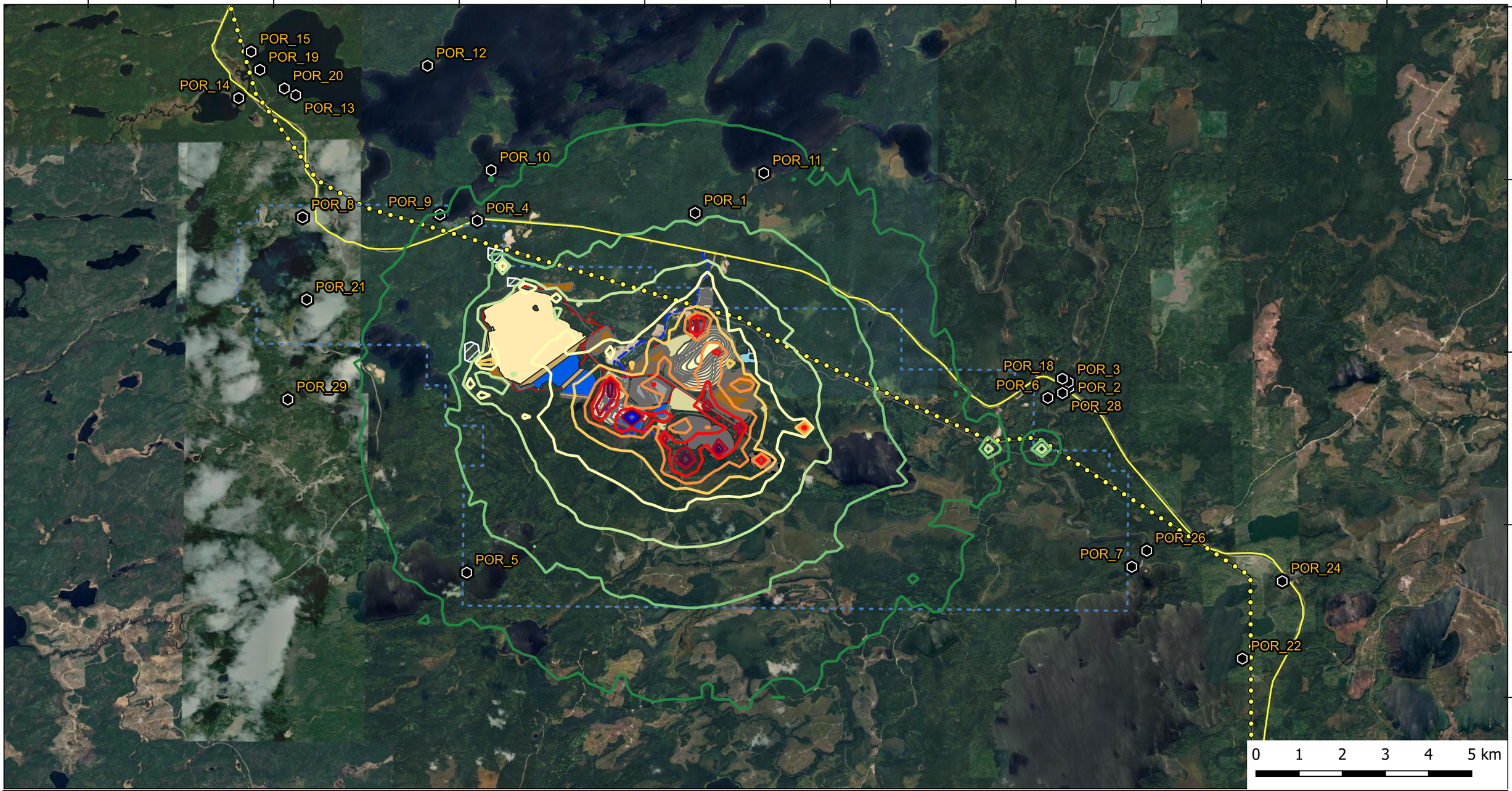

LEGEND

- Highway 105
- Property Boundary
- Powerline 115 kV
- Point of Reception

NOISE LEVELS (dBA) 35 40 45 50 55 60 65 70 75 80

Notes:
- "POR" (Point Of Reception) provided by Kinross May 2025
- Site Plan provided by Kinross in June 2025

Datum & Projection:
NAD83 / UTM zone 15N

KINROSS wood.

Great Bear Resources
Noise Assessment

Nighttime Noise Contours
Peak Production Phase

PROJECT NO: CA03912	FIGURE C-4
SCALE: 1:85220	DATE: August 2025

442900 447200 451500 455800 460100 464400 468700 473000

5644000 5640000 5636000 5632000 5628000

POR_15 POR_19 POR_20 POR_14 POR_13 POR_12 POR_10 POR_11 POR_8 POR_9 POR_4 POR_1 POR_21 POR_29 POR_5 POR_18 POR_3 POR_6 POR_2 POR_28 POR_26 POR_7 POR_24 POR_22

0 1 2 3 4 5 km

LEGEND

- Highway 105
- Property Boundary
- Powerline 115 kV
- Point of Reception

NOISE LEVELS (dBA) 35 40 45 50 55 60 65 70 75 80

Notes:
- "POR" (Point Of Reception) provided by Kinross May 2025
- Site Plan provided by Kinross in June 2025

Datum & Projection:
NAD83 / UTM zone 15N

KINROSS wood.

Great Bear Resources
Noise Assessment

Daytime Noise Contours
Underground Production Phase

PROJECT NO: CA03912	FIGURE C-5
SCALE: 1:85220	DATE: August 2025

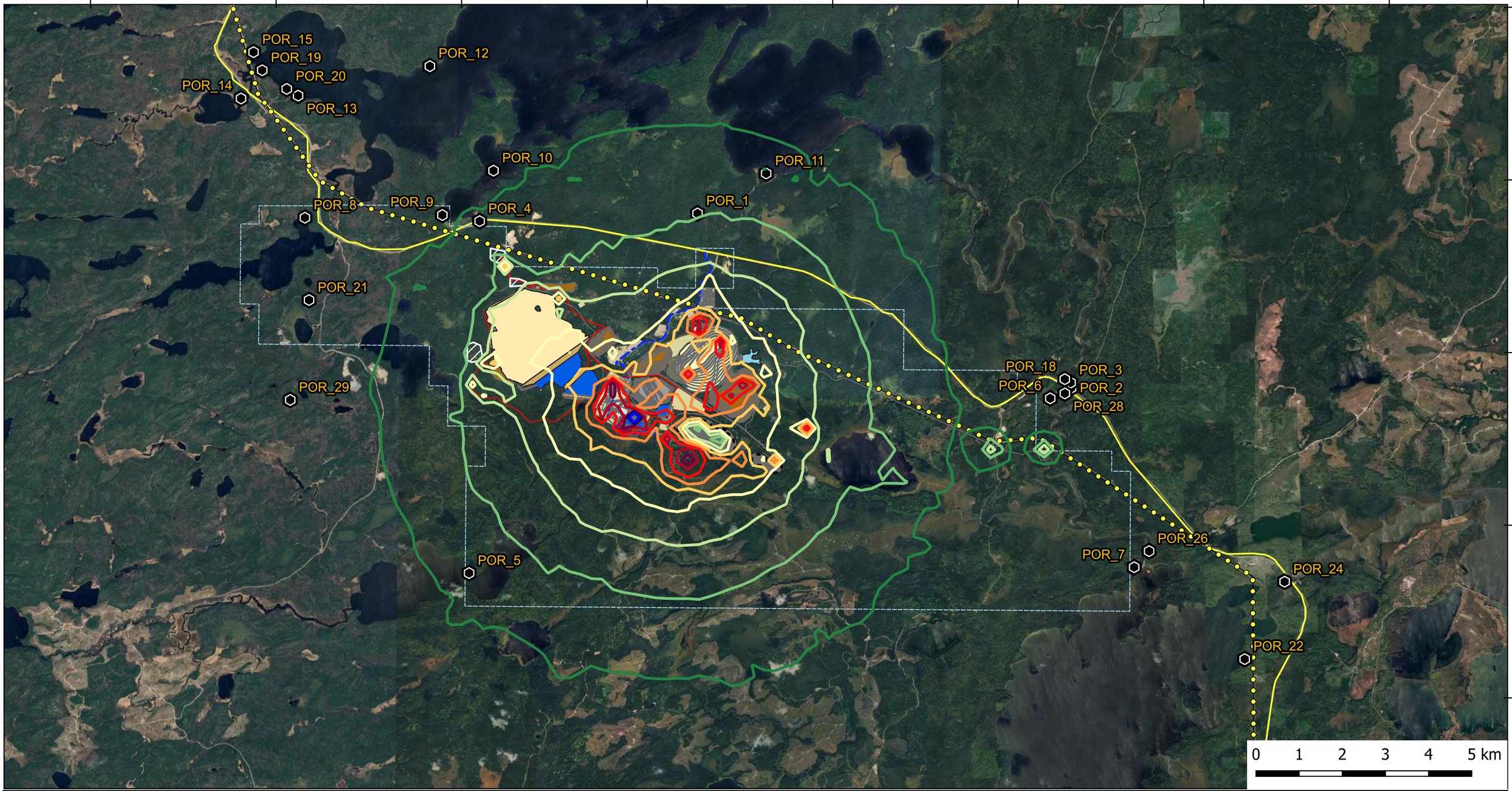

LEGEND

- Highway 105
- Property Boundary
- Powerline 115 kV
- Point of Reception

NOISE LEVELS (dBA) 35 40 45 50 55 60 65 70 75 80

Notes:
- "POR" (Point Of Reception) provided by Kinross May 2025
- Site Plan provided by Kinross in June 2025

Datum & Projection:
NAD83 / UTM zone 15N

KINROSS wood.

Great Bear Resources
Noise Assessment

Nighttime Noise Contours
Underground Production Phase

PROJECT NO: CA03912	FIGURE C-6
SCALE: 1:85220	DATE: September 2025

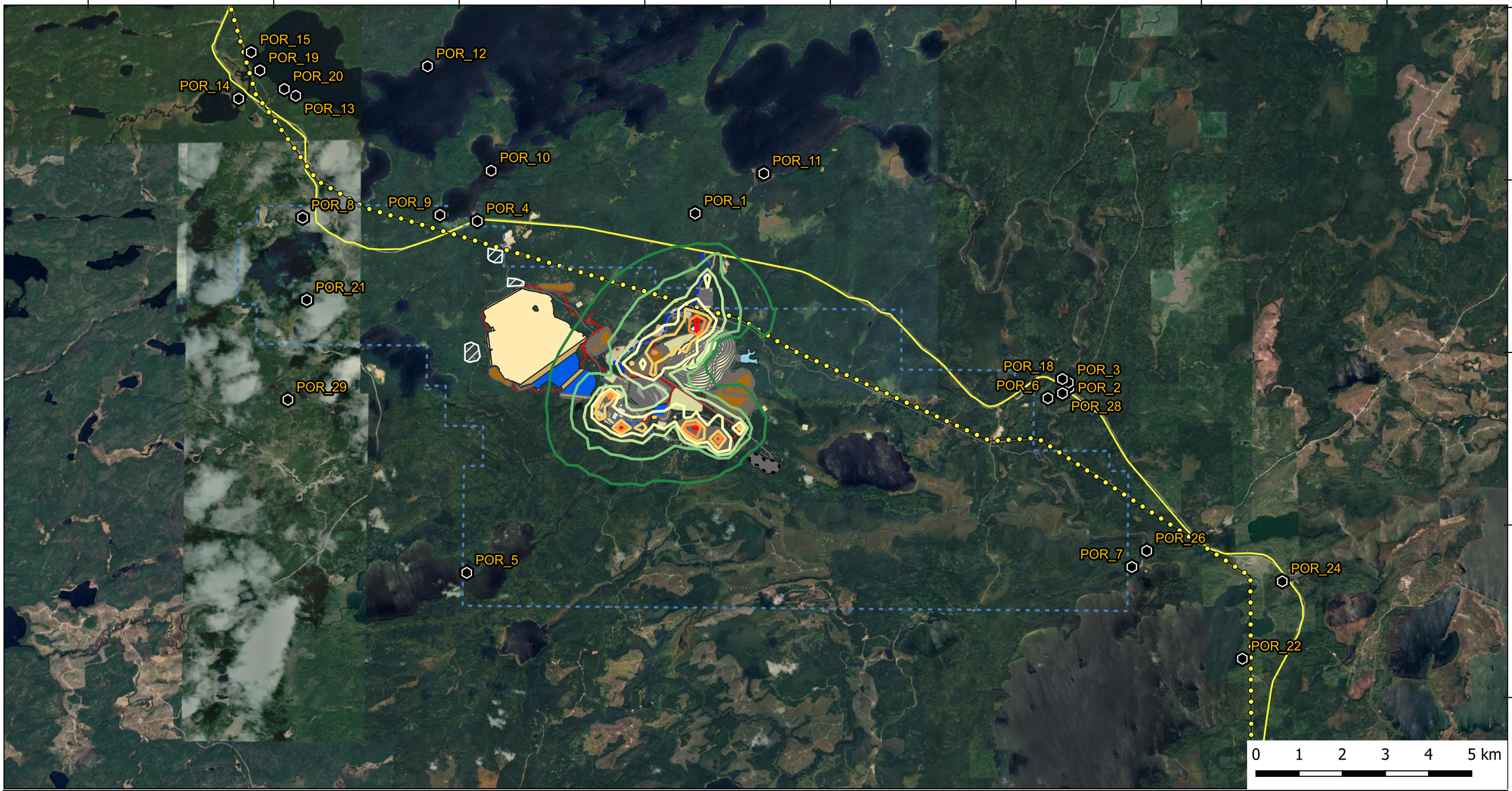

LEGEND

- Highway 105
- Property Boundary
- Powerline 115 kV
- Point of Reception

NOISE LEVELS (dBA) 35 40 45 50 55 60 65 70 75 80

Notes:
- "POR" (Point Of Reception) provided by Kinross May 2025
- Site Plan provided by Kinross in June 2025

Datum & Projection:
NAD83 / UTM zone 15N

KINROSS wood.

Great Bear Resources
Noise Assessment

Daytime Noise Contours
Closure Phase

PROJECT NO: CA03912	FIGURE C-7
SCALE: 1:85220	DATE: August 2025

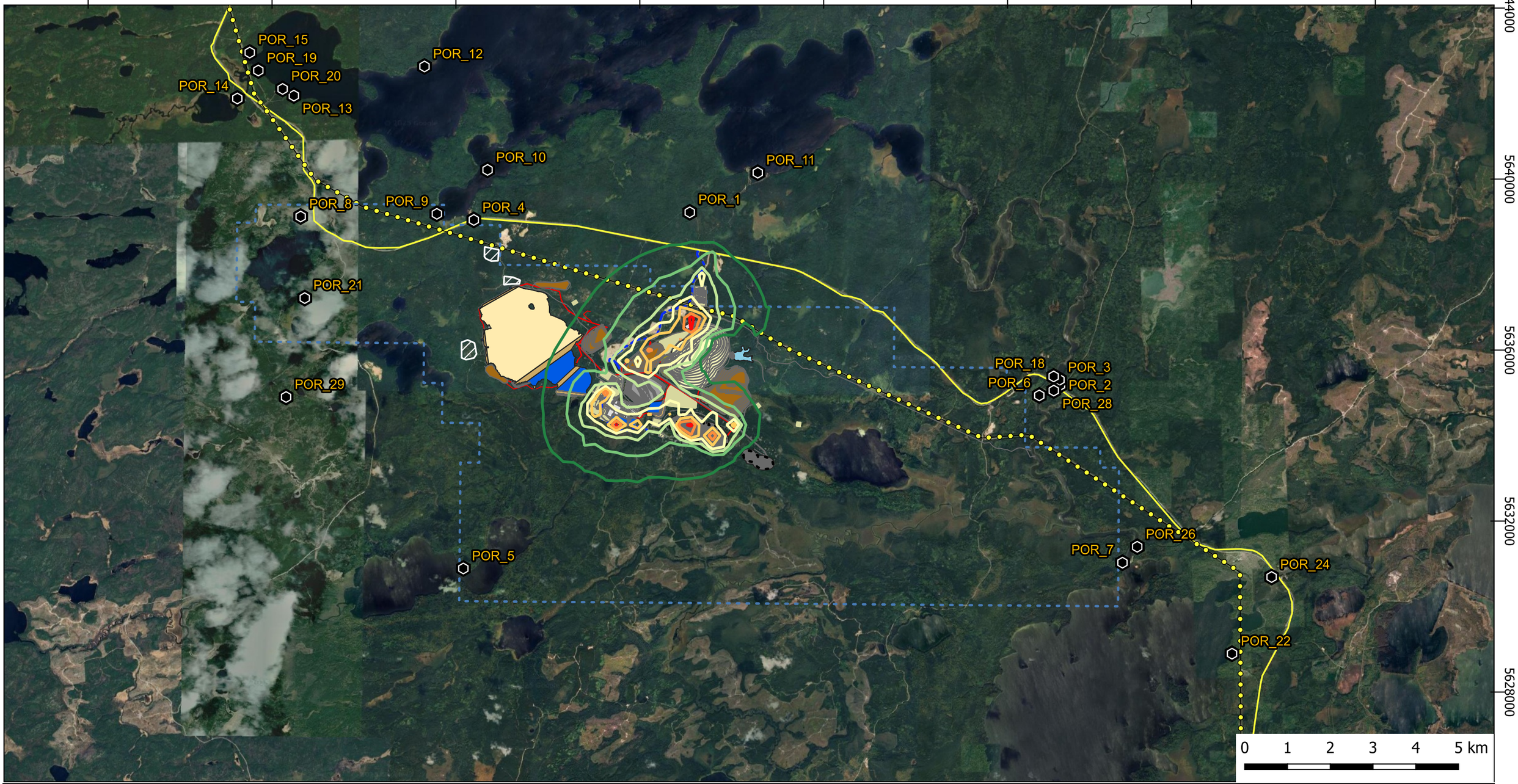

LEGEND

- Highway 105
- Property Boundary
- Powerline 115 kV
- Point of Reception

NOISE LEVELS (dBA) 35 40 45 50 55 60 65 70 75 80

Notes:
- "POR" (Point Of Reception) provided by Kinross May 2025
- Site Plan provided by Kinross in June 2025

Datum & Projection:
NAD83 / UTM zone 15N

KINROSS wood.

Great Bear Resources
Noise Assessment

Nighttime Noise Contours
Closure Phase

PROJECT NO: CA03912	FIGURE C-8
SCALE: 1:85220	DATE: August 2025

Appendix D

Manufacturer Sound Data

Environmental Declaration

The following information applies to the machine at the time of final manufacture as configured for sale in the regions covered in this document. The content of this declaration is valid as of the date issued; however, content related to machine features and specifications are subject to change without notice. For additional information, please see the machine's Operation and Maintenance Manual.

For more information on sustainability in action and our progress, please visit www.caterpillar.com/en/company/sustainability.html.

ENGINE

- The Cat C4.4 is available in configurations that meet Stage V emissions standards.
- Cat diesel engines are required to use ULSD (ultra-low sulfur diesel fuel with 15 ppm of sulfur or less) or ULSD blended with the following lower-carbon intensity fuels up to:
  - ✓ 20% biodiesel FAME (fatty acid methyl ester)
  - ✓ 100% renewable diesel, HVO (hydrotreated vegetable oil) and GTL (gas-to-liquid) fuels

Refer to guidelines for successful application. Please consult your Cat dealer or "Caterpillar Machine Fluids Recommendations" (SEBU6250) for details.

AIR CONDITIONING SYSTEM

The air conditioning system on this machine contains the fluorinated greenhouse gas refrigerant R134a (Global Warming Potential = 1430). The system contains 0.8 kg (1.8 lb) of refrigerant, which has a CO_2 equivalent of 1.144 metric tonnes (1.261 tons).

PAINT

- Based on best available knowledge, the maximum allowable concentration, measured in parts per million (PPM), of the following heavy metals in paint are:
  - – Barium < 0.01%
  - – Cadmium < 0.01%
  - – Chromium < 0.01%
  - – Lead < 0.01%

SOUND PERFORMANCE

With cooling fan speed at maximum value:

Exterior Sound Power Level (ISO 6395:2008) – 109 dB(A)

With cooling fan speed at 70% of maximum value:

Operator Sound Pressure Level (ISO 6396:2008) – 79 dB(A)

- When properly installed and maintained, the cab offered by Caterpillar, when tested with doors and windows closed according to ANSI/SAE J1166 OCT98, meets OSHA and MSHA requirements for operator sound exposure limits in effect at time of manufacture.
- Hearing protection may be needed when operating with an open operator station and cab (when not properly maintained or doors/windows open) for extended periods or in a noisy environment.

OILS AND FLUIDS

- Caterpillar factory fills with ethylene glycol coolants. Cat Diesel Engine Antifreeze/Coolant (DEAC) and Cat Extended Life Coolant (ELC) can be recycled. Consult your Cat dealer for more information.
- Cat BIO HYDO™ Advanced is an EU Ecolabel approved biodegradable hydraulic oil.
- Additional fluids are likely to be present, please consult the Operations and Maintenance Manual or the Application and Installation guide for complete fluid recommendations and maintenance intervals.

FEATURES AND TECHNOLOGY

- The following features and technology may contribute to fuel savings and/or carbon reduction. Features may vary. Consult your Cat dealer for details.
  - – Standard mode limits engine RPM, lowering overall fuel consumption compared to high idle
  - – Optional compaction control reduces unnecessary passes, contributing to lower overall fuel consumption
  - – Extended maintenance intervals reduce fluid and filter consumption
  - – Auto idle shutdown reduces unproductive hours and fuel burned
  - – Hydraulic on-demand fan changes speed with temperature

430 Environmental Declaration

The following information applies to the machine at the time of final manufacture as configured for sale in the regions covered in this document. The content of this declaration is valid as of the date issued; however, content related to machine features and specifications are subject to change without notice. For additional information, please see the machine's Operation and Maintenance Manual.

For more information on sustainability in action and our progress, please visit https://www.caterpillar.com/en/company/sustainability.

Engine

- The Cat® C3.6 engine meets U.S. EPA Tier 4 Final and EU Stage V emission standards.
- Cat diesel engines are required to use ULSD (ultra-low sulfur diesel fuel with 15 ppm of sulfur or less) or ULSD blended with the following lower-carbon intensity fuels up to:
  - ✓ 20% biodiesel FAME (fatty acid methyl ester)
  - ✓ 100% renewable diesel, HVO (hydrotreated vegetable oil) and GTL (gas-to-liquid) fuels

  Refer to guidelines for successful application. Please consult your Cat dealer or "Caterpillar Machine Fluids Recommendations" (SEBU6250) for details.

Air Conditioning System

- The air conditioning system on this machine contains the fluorinated greenhouse gas refrigerant R134a (Global Warming Potential = 1430). The system contains 1.6 kg (3.5 lb) of refrigerant which has a CO_2 equivalent of 2.3 metric tonnes (2.5 tons).

Paint

- Based on best available knowledge, the maximum allowable concentration, measured in parts per million (PPM), of the following heavy metals in paint are:
  - Barium < 0.01%
  - Cadmium < 0.01%
  - Chromium < 0.01%
  - Lead < 0.01%

Sound Performance

Operator Sound Pressure Level (ISO 6396:2008) – 76 dB(A)*

Exterior Sound Power Level (ISO 6395:2008) – 101 dB(A)

*Measurements were conducted with properly installed and maintained cab doors and windows closed.

Oils and Fluids

- Caterpillar factory fills with ethylene glycol coolants. Cat Diesel Engine Antifreeze/Coolant (DEAC) and Cat Extended Life Coolant (ELC) can be recycled. Consult your Cat dealer for more information.
- Cat Bio HYDO™ Advanced is an EU Ecolabel approved biodegradable hydraulic oil.
- Additional fluids are likely to be present, please consult the Operations and Maintenance Manual or the Application and Installation guide for complete fluid recommendations and maintenance intervals.

Features and Technology

- The following features and technology may contribute to fuel savings and/or carbon reduction. Features may vary. Consult your Cat dealer for details.
  - Save fuel and reduce your greenhouse gas emissions with efficiency features such as operator control modes selectable through the display and with fuel management modes.
  - Extended maintenance intervals not only reduce downtime but decrease the amount of fluid and filters that are replaced over the life of the machine.
  - Auto Idle helps reduce unnecessary fuel burn and greenhouse gas emissions by allowing the engine to automatically go into idle mode when the machine is not working.

Recycling

- The materials included in machines are categorized as below with approximate weight percentage. Because of variations of product configurations, the following values in the table may vary.

Material Type	Weight Percentage
Steel	60.51%
Iron	16.77%
Nonferrous Metal	3.29%
Mixed Metal	0.63%
Mixed-Metal and Nonmetal	1.03%
Plastic	2.13%
Rubber	3.01%
Mixed Nonmetallic	0.03%
Fluid	4.17%
Other	6.33%
Uncategorized	2.10%
Total	100.00%

- A machine with higher recyclability rate will ensure more efficient usage of valuable natural resources and enhance End-of-Life value of the product. According to ISO 16714 (Earthmoving machinery – Recyclability and recoverability – Terminology and calculation method), recyclability rate is defined as percentage by mass (mass fraction in percent) of the new machine potentially able to be recycled, reused, or both.

  All parts in the bill of material are first evaluated by component type based on a list of components defined by the ISO 16714 and Japan CEMA (Construction Equipment Manufacturers Association) standards. Remaining parts are further evaluated for recyclability based on material type.

  Because of variations of product configurations, the following value in the table may vary.

Recyclability – 92%

Cat® 325F L Hydraulic Excavator

Engine	
Engine Model	Cat C4.4 ACERT
Power – ISO 9249 (metric)	120 kW (163 PS/161 hp)
Power – ISO 14396 (metric)	122 kW (166 PS/164 hp)
Bore	105 mm
Stroke	127 mm
Displacement	4.4 L

- The air conditioning system on this machine contains the fluorinated greenhouse gas refrigerant R134a (Global Warming Potential = 1430). The system contains 1 kg of refrigerant which has a CO_2 equivalent of 1.43 metric tonnes.

Hydraulic System	
Main System – Maximum Flow	429 L/min (214.4 × 2 pumps)
Maximum Pressure – Equipment – Normal	35 000 kPa
Maximum Pressure – Equipment – Lift Mode	38 000 kPa
Maximum Pressure – Travel	35 000 kPa
Maximum Pressure – Swing	25 500 kPa
Pilot System	
Maximum Flow	18 L/min
Maximum Pressure	4100 kPa

Drive	
Gradeability	30°/70%
Maximum Travel Speed	5.6 km/h
Maximum Drawbar Pull	203 kN

Machine Weights	
Minimum Operating Weight	25 610 kg
Maximum Operating Weight	27 230 kg

Swing	
Swing Speed	11.2 rpm
Swing Torque	62 kN·m

Service Refill Capacities	
Fuel Tank Capacity	328 L
Cooling System	30 L
Engine Oil	25 L
Swing Drive (each)	8 L
Final Drive (each)	8 L
Hydraulic System Oil Capacity (including tank)	280 L
Hydraulic Tank Oil	128 L
DEF Tank	19 L

Sound Performance	
Exterior Sound Power Level – ISO 6395:2008	99 dB(A)*
Operator Sound Pressure Level – ISO 6396:2008	69 dB(A)

*As per European Union Directive 2000/14/EC as amended by 2005/88/EC.

Dimensions		
Boom Options	**Reach Boom 5.7 m**	**VA Boom* 2.4 m Stub/ 3.3 m Fore**
Stick Options	**R2.9**	**R2.9**
Shipping Height – Top of Cab	3060 mm	3060 mm
Shipping Height– Top of Boom	3180 mm	3140 mm
Shipping Length	8920 mm	9180 mm
Tail Swing Radius	1720 mm	1720 mm
Length to Center of Rollers	3650 mm	3650 mm
Track Length	4460 mm	4460 mm
Ground Clearance	450 mm	450 mm
Track Gauge	2380 mm	2380 mm
Undercarriage Width – 600 mm Shoes	2980 mm	2980 mm
Undercarriage Width – 700 mm Shoes	3080 mm	3080 mm
Undercarriage Width – 790 mm Shoes	3170 mm	3170 mm
Upperframe Width	2980 mm	2980 mm
Handrail Height	3180 mm	3180 mm
Counterweight Clearance	960 mm	960 mm
Bucket Capacity	1.19 m^3	1.3 m^3

Working Ranges		
Boom Options	**Reach Boom 5.7 m**	**VA Boom* 2.4 m Stub/ 3.3 m Fore**
Stick Options	**R2.9**	**R2.9**
Maximum Digging Depth	6710 mm	6510 mm
Maximum Reach at Ground Line	9790 mm	10 130 mm
Maximum Loading Height	7890 mm	8540 mm
Minimum Loading Height	2960 mm	3420 mm
Maximum Depth Cut for 2440 mm Level Bottom	6540 mm	6420 mm
Maximum Vertical Wall Digging Depth	5000 mm	5170 mm
Maximum Cutting Height	10 960 mm	11 650 mm
Bucket Capacity	1.19 m^3	1.3 m^3
Bucket Digging Force (ISO)	150 kN	140 kN
Stick Digging Force (ISO)	106 kN	107 kN

*For Europe only.

For more complete information on Cat products, dealer services, and industry solutions, visit us on the web at **www.cat.com**

© 2017 Caterpillar
All rights reserved

Materials and specifications are subject to change without notice. Featured machines in photos may include additional equipment. See your Cat dealer for available options.

CAT, CATERPILLAR, SAFETY.CAT.COM, their respective logos, "Caterpillar Yellow" and the "Power Edge" trade dress, as well as corporate and product identity used herein, are trademarks of Caterpillar and may not be used without permission.

VisionLink is a trademark of Trimble Navigation Limited, registered in the United States and in other countries.

AEXQ1784-01
Replaces AEXQ1784
(Europe/HK/TW)

Technical data

Engine

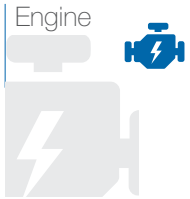

Engine		
Model	**CAT C18**	*CAT C18*
Power rating	**563 kW @ 1800 rpm**	*755 HP @ 1800 rpm*
Engine conforms to Exhaust emission Standard	**EU Stage V / US EPA Tier 4f**	*EU Stage V / US EPA Tier 4f*
Fuel tank capacity	**1100 l**	*291 US gal*

Available:
Engine Tier 2: Power rating 570 kW (764HP) @ 1800 rpm

Hydraulic system



The cleaning of hydraulic oils is electronically monitored and any clogging is show to operator on DMS control system in the cab.

Hydraulic systems		
Main pumps flow - dedicated for hydromill module	**2 x 420 l/min**	*2 x 111 US gal*
Main pumps flow - dedicated for base carrier	**2 x 384 l/min**	*2 x 101 US gal*
Hydraulic oil capacity	**1250 l**	*330 US gal*

Winches



Main winch	Option 1	
Type	**Free fall**	*Free fall*
1st layer line pull (nominal)	**300 kN**	*67442 lbf*
1 st layer rope speed (max)	**81 m/min**	*266 ft/min*
Rope diameter	**36 mm**	*1,4 in*
Rope layers	**3**	*3*
Useful rope length with 1 / 2 / 3 full layers	**38 / 87 / 140 m**	*125 / 285 / 459 ft*

Main winch	Option 2	
Type	**Free fall**	*Free fall*
1st layer line pull (nominal)	**350 kN**	*78682 lbf*
1 st layer rope speed (max)	**73 m/min**	*240 ft/min*
Rope diameter	**36 mm**	*1,4 in*
Rope layers	**3**	*3*
Useful rope length with 1 / 2 / 3 full layers	**39 / 90 / 144 m**	*128 / 295 / 472ft*

Upper structure



Upper structure		
Turret width	**3500 mm**	*138 in*
Slewing speed	**3,5 rpm**	*3,5 rpm*
Swing tail radius	**5310 mm**	*209 in*

Undercarriage

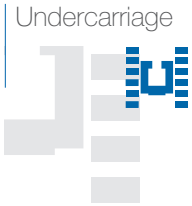

Especially designed for heavy duty applications that require less penetration, better turning capability and less ground disturbance. Maintenance-free crawler track. Hydraulic chain tensioning device.

Undercarriage		
Type	Variable gauge	*Variable gauge*
Overall width	**6000 mm**	*236,2 in*
Overall length	**6700 mm**	*263,8 in*
Track shoes width	**1000 mm**	*39,4 in*
Track shoes type	**Triple grouser**	*Triple grouser*
Travel speed	**0,8 - 1,6 km/h**	*0,5 - 1,0 mph*
Traction force	**722 kN**	*162309 lbf*
Average ground pressure	**0,2 MPa**	*29 psi*

Boom

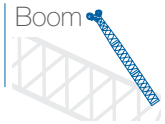

Boom		
Boom length min - max	**11 - 56 m**	*36 - 184 ft*
Boom extension length	**3 - 6 - 9 m**	*10 - 20 -30 ft*
Jib	**30 t**	*33 US ton*

Noise



Noise		
Sound pressure level in cab c/w Tier 4f Engine	**77 dB(A)**	*76 dB(A)*
Sound power level c/w Tier 4f Engine	**107 dB(A)**	*113 dB(A)*

H-cab



Soilmec H-cab. By assessing the specific application and listening properly to the wishes and requrements of the operators, Soilmec proviides the optimal operator cabin for comfort. Ergonomic seat with air suspension, fully adjustable, lumbar support, air management, as well as lines of sight, quality and safety are standard aspects considered during the design of the right oonfiguration for the cabiin.

- Cabin width	**1050 mm**	*3.4 ft*
- Sliding door		
- Courtesy lights		
- Air conditioning system and climate control unit		
- Radio player with USB aux port		

Controls

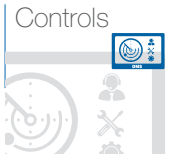

DMS control system, developed and manufactured by Soilmec - is designed to give you a total control over performance, productiion and all your drilling rigs. In real time all the information relating to the operation work cycles and diagnostics of faults are shown on a multi language touch screen display installled in the cab.
All drilling operations are actuated by two innovative joysticks.
Automatic controls of rotary head and drilling phases are available on request thanks to simple· implementation of our DMS system.

262D3 Skid Steer Loader

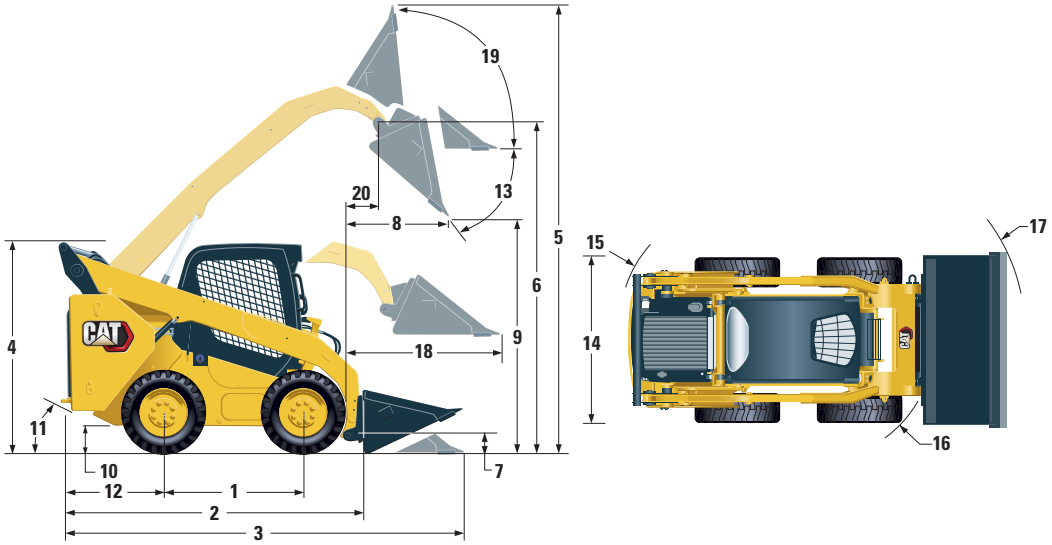

Dimensions*

1	Wheelbase	1249 mm	49.2 in	**11**	Departure Angle	26°	
2	Length without Bucket	2995 mm	117.9 in	**12**	Bumper Overhang behind Rear Axle	1083 mm	42.6 in
3	Length with Bucket on Ground	3714 mm	146.2 in	**13**	Maximum Dump Angle	51°	
4	Height to Top of Cab	2110 mm	83.1 in	**14**	Vehicle Width over Tires	1676 mm	66 in
5	Maximum Overall Height	4008 mm	157.8 in	**15**	Turning Radius from Center – Machine Rear	1805 mm	71.1 in
6	Bucket Pin Height at Maximum Lift	3172 mm	124.9 in	**16**	Turning Radius from Center – Coupler	1401 mm	55.2 in
7	Bucket Pin Height at Carry Position	200 mm	7.9 in	**17**	Turning Radius from Center – Bucket	2181 mm	85.9 in
8	Reach at Maximum Lift and Dump	786 mm	30.9 in	**18**	Maximum Reach with Arms Parallel to Ground	1293 mm	50.9 in
9	Clearance at Maximum Lift and Dump	2380 mm	93.7 in	**19**	Rack Back Angle at Maximum Height	84°	
10	Ground Clearance	226 mm	8.9 in	**20**	Bucket Pin Reach at Maximum Lift	393 mm	15.5 in

*Operating Weight, Operating Specifications and Dimensions all based on 75 kg (165 lb) operator, all fluids, one speed, OROPS, 1730 mm (68 in) low profile bucket, Cat PC 12 × 16.5 tires, standard flow hydraulics, mechanical suspension seat, no optional counterweights and manual quick coupler (unless otherwise noted).

Cab

ROPS	ISO 3471:2008
FOPS	ISO 3449:2005 Level I

Service Refill Capacities

Chain Box, each side	12.7 L	3.3 gal
Cooling System	14 L	3.7 gal
Engine Crankcase	11 L	3.0 gal
Fuel Tank	105 L	27.7 gal
Hydraulic System	52 L	13.7 gal
Hydraulic Tank	39 L	10.3 gal

Noise Level

Inside Cab**	81 dB(A)
Outside Cab***	101 dB(A)

- Cab and Rollover Protective Structures (ROPS) are standard in North America and Europe.

**The declared dynamic operator sound pressure levels per ISO 6396:2008. The measurements were conducted with the cab doors and windows closed and at 70% of the maximum engine cooling fan speed. The sound level may vary at different engine cooling fan speeds.

***The labeled sound power level for the CE marked configurations when measured according to the test procedure and conditions specified in 2000/14/EC.

Air Conditioning System (if equipped)

The air conditioning system on this machine contains the fluorinated greenhouse gas refrigerant R134a (Global Warming Potential = 1430). The system contains 1.0 kg of refrigerant which has a CO_2 equivalent of 1.430 metric tonnes.

Environmental

Operator L_{pA} (98/37 & 474-1)	85 dB(A)
Noise level L_{WA} (EU Directive 2000/14/EC)	101 dB(A)
Whole body vibration (ISO 2631–1)	0.90 ms^{-2}
Hand-arm vibration (ISO 5349–1)	1.40 ms^{-2}

Safety

Bobcat Interlock Control System (BICS), standard	Requires the operator to be seated in the loader with the seat bar in place and the engine running. After the operator presses the “Press to Operate Loader” button, the loader's hydraulic lift and tilt functions and traction drive can be operated.
Lift arm bypass control, standard	Used to lower the lift arms in the event that the lift arms cannot be lowered during normal operating conditions.
Seat belt, standard	Should always be worn when operating the loader. Three-point shoulder belt provides restraint for high range speeds.
Seat bar, standard	Secondary operator restraint, also serves as an arm rest.
Operator cab, standard	An enclosed operator cab with side screens with a minimal inside cab width of 838 mm. Meets SAE-J1040 and ISO 3471 for Roll Over Protective Structure (ROPS) and SAE-J1043 and ISO 3449 Level I * for Falling Objects Protective Structure (FOPS). Level II ** option is available.
Lift arm support, standard	Use for servicing when lift arms are raised.
Parking brake, standard	Always set brake when leaving loader.
Grab handles, standard	Should always be used when entering/exiting loader.
Safety tread, standard	Slip resistant tread on lift arms and main frame to be used when entering/exiting loader.
Attachment steps, standard	Should always be used when entering/exiting loader.
Rear window, standard	For emergency exit.
Front and rear working lights, standard	Use for indoor and low light operation.
Backup alarm, optional	For use in areas with high traffic
Lift kits, optional	Lift kits are available so loader may be lifted into remote areas.
Special applications kit, optional	Restricts objects and material from entering cab openings.
Operator's handbook, standard	Weather-resistant operator handbook attached to the inside of the cab, providing operational instructions and warnings decals with pictorials and international symbols.

*** Level I — Acceptance is intended for protection from falling bricks, small concrete blocks, and hand tools encountered in operations such as highway maintenance, landscaping, and other construction site services.**

**** Level II — Acceptance is intended for protection from falling trees or rocks for machines involved in site clearing, overhead demolition, or forestry.**

Which model is right for you?

We offer a full line of portable generators, with the objective of covering all your needs:

For general everyday use, or for frequent single job use, the **iP** and **P** generators are the perfect solution. If you need something for more intensive use, with higher power levels and extended features then the **QEP** is the solution for you. All models offer proven reliability, fuel efficiency, low noise levels and long run times between refueling – with a combination that is right for every application.

The **iP** and **P** generators are focused on contractors for personal use, who require portable power at a moment's notice. The **QEP** is perfect for rental use or larger work sites where the power needs to be shared. The extended safety features of the QEP R minimize the risk of damage to the generator through misuse. Other safety features include an onboard differential circuit breaker. When it comes to urban environments and even lower noise levels, then the **QEP S**, with its noise suppression design, provides the perfect companion.

iP	P	QEP	QEP R	QEP S
1,6 to 6 kW	2,5 to 6,5 kW	2,5 to 6,5 kW	5 to 11 kW	3,5 to 11 kW
				
21 kg	52 KG	42 KG	69 KG	99 KG
63 dB(A) at 7m	70 dB(A) at 7m	67 dB(A) at 7m	68 dB(A) at 7m	61 dB(A) at 7m
6 hrs BEFORE REFUELLING	11 hrs BEFORE REFUELLING	9 hrs BEFORE REFUELLING	12 hrs BEFORE REFUELLING	12 hrs BEFORE REFUELLING
MULTIPLE UNITS CAN BE CONNECTED	AVR ELECTRIC START	ROBUSTNESS	AVR ELECTRIC START REMOTE START	LIFTING FRAME

Data may change depending on the model selected. Please refer to full data tables for exact product specification.

Weight Distributions – Approximate

Front Axle – Empty	50%
Front Axle – Loaded	34%
Rear Axle – Empty	50%
Rear Axle – Loaded	66%

Suspension

Empty Loaded Cylinder Stroke Front	234 mm	9.2 in
Empty Loaded Cylinder Stroke Rear	149 mm	5.8 in
Rear Axle Oscillation	8.1°	

Sound

Sound Standards

- The operator Equivalent Sound Pressure Level (Leq) is 76 dB(A) when SAE J1166 FEB2008 is used to measure the value for an enclosed cab. This is a work cycle sound exposure level. The cab was properly installed and maintained. The test was conducted with the cab doors and the cab windows closed.
- The exterior sound pressure level for the standard machine measured at a distance of 15 m (49 ft) according to the test procedures specified in SAE J88:2008, mid-gear moving operation is 86 dB(A).
- Hearing protection may be needed when operating with an open operator station and cab (when not properly maintained or doors/windows open) for extended periods or in a noisy environment.

Service Refill Capacities

Fuel Tank	795 L	210 gal
Cooling System	171 L	45 gal
Crankcase	90 L	24 gal
Differentials and Final Drives	145 L	38 gal
Steering Tank	36 L	9.5 gal
Steering System (includes tank)	54 L	14 gal
Brake/Hoist Hydraulic Tank	176 L	46.5 gal
Brake Hoist System	322 L	85 gal
Torque Converter/ Transmission System HRC	70 L	18 gal
Torque Converter/ Transmission System LRC	61 L	16 gal

Steering

Steering Standards	SAE J1511 FEB94 ISO 5010:1992	
Steer Angle	31°	
Turning Diameter – Front	23.5 m	77 ft 1 in
Turning Circle Clearance Diameter	26.1 m	85 ft 8 in

Tires

Standard Tire	24.00R35 (E4)

- Productive capabilities of the 775G truck are such that, under certain job conditions, TKPH (TMPH) capabilities of standard or optional tires could be exceeded and, therefore, limit production.
- Caterpillar recommends the customer evaluate all job conditions and consult the tire manufacturer for proper tire selection.

ROPS

ROPS/FOPS Standards

- ROPS (Rollover Protective Structure) for cab offered by Caterpillar meets ISO 3471:2008 ROPS criteria.
- FOPS (Falling Objects Protective Structure) meets ISO 3449:2005 Level II FOPS criteria.



Cat®
TL1055

TELEHANDLER

Specifications

Engine

Model*	Cat® C3.6L	
Gross Power (Basic)	100 kW	134 hp

*Meets U.S. EPA Tier 4 Final emission standards.

Operating Specifications

Maximum Rated Load Capacity	4536 kg	10,000 lb
Maximum Lift Height (o/r Down)	16.7 m	54.9 ft
Maximum Forward Reach	12.8 m	42 ft
Frame Leveling	10°	
Top Travel Speed	33.8 km/h	21 mph
Capacity at Maximum Height (o/r Down)	2268 kg	5,000 lb
Capacity at Maximum Reach (o/r Down)	1134 kg	2,500 lb
Turning Radius over Tires	4.3 m	14.1 ft
Drawbar Pull – Loaded	117.9 kN	26,510 lbf
Operating Weight	14 379 kg	31,700 lb

Hydraulic System

Variable displacement load sensing axial piston pump		
Auxiliary Hydraulic Pressure	228 bar	3,307 psi
Auxiliary Hydraulic Flow	95 L/min	25 gal/min

Service Refill Capacities

Fuel Tank	145 L	38 gal
Diesel Exhaust Fluid (DEF) Tank	21.5 L	5.7 gal
Hydraulic System	185 L	49 gal

Axles and Brakes

- Trunnion mounted planetary 55-degree steer axles
- High bias limited slip differential on front axle
- Service brakes: Inboard wet disc brakes on front and rear axles
- Parking Brakes: Wet disc, spring applied hydraulic release on front axle

Transmission Speeds

Forward/Reverse	4 Speeds/3 Speeds

Tires

Standard	400/75-28 Duraforce Air
Optional	400/75-28 Duraforce Foam
	360/85-28 Telemaster Solid
	14.00-24 16PR Air
	14.00-24 12PR Foam
	400/75-28 Non-Marking Air
	400/75-28 Non-Marking Foam

Boom Performance

Boom Up/Boom Down	15.0 Seconds/13.0 Seconds
Tele In/Tele Out	15.3 Seconds/19.7 Seconds

Optional Work Tool Attachments

Hydraulic IT Coupler		
Carriages		
Standard Tilt	1270 mm	50 in
	1524 mm	60 in
	1829 mm	72 in
Side Tilt	1270 mm	50 in
	1829 mm	72 in
Side Shift	1270 mm	50 in
Swing, 100°	1829 mm	72 in
Dual Hydraulic Fork Positioner	1270 mm	50 in
	1829 mm	72 in
Forks		
Pallet	1220 mm	48 in
	1525 mm	60 in
	1829 mm	72 in
Lumber	1525 mm	60 in
Block/Cubing	1220 mm	48 in
Fork Extensions*	2286 mm	90 in
Buckets		
General Purpose	1.0 m^3	1.3 yd^3
	1.5 m^3	2.0 yd^3
Multi Purpose	1.0 m^3	1.3 yd^3
Grapple	1.3 m^3	1.7 yd^3
Material Handling Arm	Adjustable 2-4 m	Adjustable 6.7-13.2 ft
Truss Booms	3.7 m	12 ft
	4.6 m	15 ft
Truss with Winch	0.9 m	3 ft
	3.7 m	12 ft
Fork Mounted		
Work Platform	1220 mm × 2438 mm	4 ft × 8 ft
Truss Boom	Adjustable 2.1-3.6 m	Adjustable 7-12 ft
Lifting Hook		
Trash Hopper		

*For use with 1525 mm (60 in) forks or larger

CAT®

Environmental Declaration

The following information applies to the machine at the time of final manufacture as configured for sale in the regions covered in this document. The content of this declaration is valid as of the date issued; however, content related to machine features and specifications are subject to change without notice. For additional information, please see the machine's Operation and Maintenance Manual.

For more information on sustainability in action and our progress, please visit www.caterpillar.com/en/company/sustainability.html.

ENGINE

- The Cat C4.4 is available in configurations that meet U.S. Tier 4 Final and EU Stage IV emissions standards.
- Cat diesel engines are required to use ULSD (ultra-low sulfur diesel fuel with 15 ppm of sulfur or less) or ULSD blended with the following lower-carbon intensity fuels up to:
  - ✓ 20% biodiesel FAME (fatty acid methyl ester)*
  - ✓ 100% renewable diesel, HVO (hydrogenated vegetable oil) and GTL (gas-to-liquid) fuels

Refer to guidelines for successful application. Please consult your Cat dealer or "Caterpillar Machine Fluids Recommendations" (SEBU6250) for details.

**Engines with no aftertreatment devices can use higher blends, up to 20% biodiesel.*

AIR CONDITIONING SYSTEM

The air conditioning system on this machine contains the fluorinated greenhouse gas refrigerant R134a (Global Warming Potential = 1430). The system contains 0.8 kg (1.8 lb) of refrigerant, which has a CO_2 equivalent of 1.144 metric tonnes (1.261 tons).

PAINT

- Based on best available knowledge, the maximum allowable concentration, measured in parts per million (PPM), of the following heavy metals in paint are:
  - Barium < 0.01%
  - Cadmium < 0.01%
  - Chromium < 0.01%
  - Lead < 0.01%

SOUND PERFORMANCE

With cooling fan speed at maximum value:

Exterior Sound Power Level (ISO 6395:2008) – 108 dB(A)

With cooling fan speed at 70% of maximum value:

Operator Sound Pressure Level (ISO 6396:2008) – 79 dB(A)

- When properly installed and maintained, the cab offered by Caterpillar, when tested with doors and windows closed according to ANSI/SAE J1166 OCT98, meets OSHA and MSHA requirements for operator sound exposure limits in effect at time of manufacture.
- Hearing protection may be needed when operating with an open operator station and cab (when not properly maintained or doors/windows open) for extended periods or in a noisy environment.

OILS AND FLUIDS

- Caterpillar factory fills with ethylene glycol coolants. Cat Diesel Engine Antifreeze/Coolant (DEAC) and Cat Extended Life Coolant (ELC) can be recycled. Consult your Cat dealer for more information.
- Cat BIO HYDO™ Advanced is an EU Ecolabel approved biodegradable hydraulic oil.
- Additional fluids are likely to be present, please consult the Operations and Maintenance Manual or the Application and Installation guide for complete fluid recommendations and maintenance intervals.

FEATURES AND TECHNOLOGY

- The following features and technology may contribute to fuel savings and/or carbon reduction. Features may vary. Consult your Cat dealer for details.
  - Standard eco-mode limits engine RPM, lowering overall fuel consumption compared to high idle
  - Optional compaction control reduces unnecessary passes, contributing to lower overall fuel consumption
  - Extended maintenance intervals reduce fluid and filter consumption
  - Auto idle shutdown reduces unproductive hours and fuel burned
  - Hydraulic on demand fan changes speed with temperature

Engine

Four-stroke, four cylinder Caterpillar 3054C turbocharged diesel engine. Meets EU directive 97/68/EC Stage II emission requirements. No derating required up to 2134 m altitude.

Ratings at 2200 rpm	kW	hp
Gross power	75	100

The following ratings apply at 2200 rpm when tested under the conditions for the specified standard:

Net Power		
ISO 9249	63	85
EEC 80/1269	63	85

Net power advertised is the power available at the flywheel when the engine is equipped with fan, air cleaner, muffler and alternator and air cleaner, muffler, alternator and air compressor.

Dimensions

Bore	105 mm
Stroke	127 mm
Displacement	4,4 liters

Transmission

Hydraulic torque convertor and powershift transmission are mounted directly to the engine. The shift control valve is electrically actuated. Mechanical differential controlled from the operator's station. Final drive to rear wheels by low-maintenance, heavy-duty chains in oil-tight casings. Corresponds to ISO/R606 minimum charge for rupture of 17 000 PB kp (32B-1) ISO 167 kN/wheel.

Speeds (forward and reverse)

1st	0 to 6 km/h
2nd	0 to 13 km/h
3rd	0 to 19 km/h

Service Refill Capacities

	Liters
Fuel Tank	215
Engine Crankcase	9
Hydraulic Tank	10
Cooling System	28
Differential	15
Transmission	24
Chain Casings	40
Tire Watering System	460

Sound

Operator Sound. The operator sound level measured according to the procedures specified in ISO6394 is 74 dB(A), for cab offered by Caterpillar, when properly installed and maintained and tested with the doors and windows closed.

Exterior Sound. The labeled spectator sound power level measured according to the test procedures and conditions specified in 2000/14/EC is 105 dB(A).

Brakes

Primary brake features

Two independent, dynamic, hydraulically applied caliper disk brakes, located on rear differential shaft to wheels. Primary brakes are actuated by a foot pedal located below the control console.

Secondary brake features

Two spring-applied/hydraulically-released caliper disc brakes located on opposite side of primary brakes on the rear differential shaft to wheels. Separate circuit than the primary brakes. Secondary brakes are actuated by a push-button switch on the control console or automatically when the engine is shut off or if pressure is lost in the brake circuit.

Brake systems meet SAE1472 practice and EN500 requirement.

Instrumentation

Transmission Oil Temperature Gauge, Speedometer, Horn, Brake Pressure Warning Light, Secondary Brake Warning Light, Hydraulic oil filter restriction light, Differential lock light, Suspension Pressure Gauge (PS), Engine Oil Pressure Gauge, Fuel Gauge, Engine Coolant Temperature, Hour Meter, Alternator Light, Tire Pressure Gauge (option), Turn Signal Indicator (option), Clutch Pressure Gauge.

Steering

Automotive type design helps to eliminate tire scuffing of the mat when turning. Priority-demand hydraulic power-assist steering provides smooth, low-effort handling.

Minimum turning radius:

Outside edge	7700 mm
Inside edge	4800 mm

Frame

The chassis is a rigid welded frame that supports the engine, transmission and sheet metal. Frame design provides a calculated balance on the front and rear axles to evenly distribute ballast weight.

Engine

Four-stroke, four cylinder Caterpillar 3054C engine. It meets EU Stage II emission requirements. No derating required up to 2134 m altitude.

Ratings at 2200 rpm	kW	hp
Gross power	75	100
Net Power		
EEC 80/1269	72	96
ISO 9249	72	96

Net power advertised is the power available at the flywheel when the engine is equipped with fan, air cleaner, muffler and alternator. All models feature a dual-element, dry-type air cleaner with visual restriction indicator.

Dimensions

Bore	105 mm
Stroke	127 mm
Displacement	4.4 liters

Transmission

Two variable displacement piston pumps supply pressurized flow to two dual displacement piston motors. One pump and motor drives the drum propel system while the other pump and motor drives the rear wheels.

The two-pump system ensures equal flow to the drive motors regardless of the operating conditions. In case the drum or wheels lose traction, the other motor can still build additional pressure to provide added torque.

The drive motors have two swashplate positions allowing operation at either maximum torque for compaction and gradeability or maximum speed for moving around the job site. A rocker switch at the operator's console triggers an electric over hydraulic control to change speed ranges.

Speed changes can be made without stopping. A single propel lever located on the control console provides smooth hydrostatic control of the machine's infinitely variable speeds in both forward and reverse.

Speeds (forward and reverse):

Low range	5.5 km/h
High range	11.5 km/h
Gradeability with or without vibration (subject to underfoot conditions)	44%

Operator and Machine Protective Equipment

Backup Alarm – 112 dB(A) alarm sounds whenever the machine is in reverse. The backup alarm has three sound levels that can be changed with a switch located on the alarm.

Seat Belt – 76 mm wide seat belt is standard.

Sound

Operator Sound. The operator sound level measured according to the procedures specified in ISO6394 is 78 dB(A), for cab offered by Caterpillar, when properly installed and maintained and tested with the doors and windows closed.

Exterior Sound. The labeled spectator sound power level measured according to the test procedures and conditions specified in 2000/14/EC is 109 dB(A).

Service Refill Capacities

	Liters
Fuel tank	160
Full fuel capacity	153
Cooling system	18
Crankcase	6.8
Eccentric weight housing	12
Limited slip axle	15.9
Planetary gear reducers	2.3
Hydraulic system	60
Hydraulic filtration system (pressure type)	15 micron absolute

Final Drives and Axle

Final drive is hydrostatic with gear reducer to the drum and hydrostatic with differential and planetary gear reduction to each wheel.

Axle:

Heavy-duty fixed rear axle with a limited slip differential for smooth and quiet torque transfer.

Axle width	1.27 m

Tires:

378 mm x 610 mm (14.9 x 24)	
CS433E	6-ply flotation
CP433E	6-ply traction

Doosan Infracore

COMPRESSOR TRAINING

12/150



Doosan Infracore Portable Power

Specifications

COMPRESSOR		ENGINE	
FAD	14.9m³/min	Type	Ingersoll Rand
Discharge pressure	12 bar	No. Cylinders	6 inline
Maximum allowable pressure	12.7 bar	Oil capcity	16.7 litres
Safety valve setting	15 bar	Speed @ full load	2000 revs/min
Maximum pressure ratio	13 : 1	Speed @ idle	1300 revs/min
Operating ambient temp	- 10 to + 46°C	Electrical system	24V negative earth
Maximum discharge temp	120°C	Power @ 2000 rpm	164Kw
Cooling system	Oil injection	Fuel tank capacity	310 litres
Oil capacity	53 litres	Coolant capacity	10 litres
Max oil system temp	120°C		
Max oil system pressure	12.7 bar		

Fixed Height Running Gear		Variable Height RG	
Shipping weight	2840 kg	Shipping weight	2900 kg
Maximum weight	2940 kg	Maximum weight	3000 kg
Max horizontal towing force	3100 kg	Max horizontal towing force	2690 kg
Max vertical coupling load	150 kgf	Max vertical coupling load	150 kgf
Wheels & Tires		**Sound Data**	
No. Off wheels	2	Rated load	83dB(A)
Tire size	205/75 R17.5	Sound power level	99dB(A)
Tire pressure	6.5 bar	Avg sound level	71dB(A)

Doosan Infracore Portable Power

Company Confidential

SULLAIR 300 & 375 SERIES TECHNICAL SPECIFICATIONS

MODEL	300HH	375	375H	375HH	425	425H
PERFORMANCE						
Actual Delivery *cfm (m³/min)*	300 (8.5)		375 (10.6)		425 (12)	
Rated Pressure *psi (bar)*	200 (13.8)	100 (6.9)	150 (10.3)	200 (13.8)	100 (6.9)	150 (10.3)
Pressure Range, *min/max (bar)*	80/200 (5.5/13.8)	80/125 (5.5/8.6)	80/150 (5.5/10.3)	80/200 (5.5/13.8)	80/125 (5.5/8.6)	80/150 (5.5/10.3)
Sound Level *dB(A)*	76					
ENGINE						
Make & Model *(Emissions Level)*	John Deere 4045HF285 (T3)					
	Caterpillar C4.4 (T2 & T3)			—	Caterpillar C4.4 (T2 & T3)	—
Cylinders	4					
Bore & Stroke *in (mm)*	4.19 x 5.00 (106 x 127) - JD					
	4.13 x 5.00 (105 x 125) - CAT			—	4.13 x 5.00 (105 x 125) - CAT	—
Rated Power *hp (kW)*	140 (104) - JD					
	130 (97) - CAT T3	117 (87) - CAT T3	130 (97) - CAT T3	—	130 (97) - CAT T3	—
	129 (96) - CAT T2	107 (79.5) - CAT T2	129 (96) - CAT T2	—	107 (79.5) - CAT T2	—
Rated Speed *rpm*	2200					
Displacement *in³ (l)*	275 (4.5) - JD					
	268 (4.4) - CAT			—	269 (4400) - CAT	—
DPQ PACKAGE — INCLUDES RUNNING GEAR						
Working Weight *lbs (kg)**	4440 (2014)					
Dry Weight *lbs (kg)*	4050 (1837)					
Drawbar Length *in (mm)*	156 (3962)					
Canopy Length *in (mm)*	99 (2515) - JD					
	107 (2718) - CAT			—	107 (2718) - CAT	—
Width *in (mm)*	77 (1956)					
Height *in (mm)*	74 (1880) - JD					
	76 (1930) - CAT			—	76 (1930)	—
Track Width *in (mm)*	68 (1715)					
Tire Size *(load range)*	H78 x 15ST (D)					
DLQ PACKAGE — LESS RUNNING GEAR						
Working Weight *lbs (kg)**	4195 (1903)					
Dry Weight *lbs (kg)**	3805 (1726)					
Canopy Length *in (mm)*	99 (2515)					
	107 (2718) - CAT			—	107 (2718) - CAT	—
Width *in (mm)*	59 (1499)					
Height *in (mm)*	64 (1626)					
	65 (1657) - CAT			—	65 (1657) - CAT	—

Air End Warranty

- 2-year standard warranty
- 5-year or 10,000-hour warranty when continuously serviced at the recommended intervals with Sullair AWF® Compressor Fluid and filters

Customize the compressor to meet your specific requirements with Sullair options

- Filtration for instrument quality air
- Aftercooler
- Special paint
- Hose reels, single and dual
- Spark arrestor
- Cold weather starting aid
- Fuel level gauge
- Brakes (recommended where required by law)
- Mechanical parking brakes
- Ball hitch
- Air filter maintenance indicators
- Block heater
- Ether starting aid

SULLAIR®
A Hitachi Group Company

SULLAIR.COM

© 2019 Sullair, LLC. All rights reserved. Specifications including appearance subject to change without notice. PAP300375T2T3201901-3
The Sullair Symbol, Sullair Wordmark and AWF are registered trademarks of Sullair, LLC.

Dear customer,

You have chosen an **ALTRAD** concrete mixer and we thank you for doing so. We advise you to read the instructions carefully and to respect the safety recommendations in order to operate and maintain your product in the best possible way.

1 - TECHNICAL CHARACTERISTICS :

machine Characteristics		L211 (2.3.4)	L251 (2.3.4)	L301 (2.3.4)	L351 (2.3.4)	L401 (2.3.4)	L451 (2.3.4)
Drum capacity	litre	195	250	300	340	380	420
Maximum mixing capacity	litre	160	200	240	280	320	350
Length - **A**	mm	1690	1690	1910	1910	1910	1910
Width - **B**	mm	850	850	950	950	1050	1050
Height - **C**	mm	1500	1500	1550	1550	1550	1550
Wheel diameter	mm	400	400	400	500	500	500
Tyre pressure	bars	2,3	2,3	2,3	2,3	2,3	2,3
Concrete mixer weight with D or P/E motor	kg	250	255	305	305	340	340
P/E/D* measured noise level	dBA	102/91	102/91	102/91	102/91/107	102/91	102/91/107
P/E/D* guaranteed noise level	dBA	105/94	105/94	105/94	105/94/110	105/94	105/94/110

*P: PETROL-DRIVEN - E: ELECTRIC - D: DIESEL-DRIVEN

Motors Characteristics		EH17BL / SP170	GX120QX	GX160QX / LX	DY23DU	1B20 / 15LD225
Power	kW/ch	4,4/6	3/4	4/5,5	3,5/4,8	3,5/4,8
Fuel tank capacity	litre	3,6	2	3,1	3,2	3
Oil capacity	litre	0,65	0,56	0,58	0,9	0,9
"Tanks empty" motor weight	kg	14,7	13	15	29	28
"Tanks full" motor weight	kg	19	15	18	33	32

Electric Moteurs Characteristics		SINGLE-PHASE 0.75 HP	SINGLE-PHASE 2 HP THREE-PHASE 2 HP
Power	kW/ch	0,55/0,75	1,5/2
Motor weight	kg	9	15

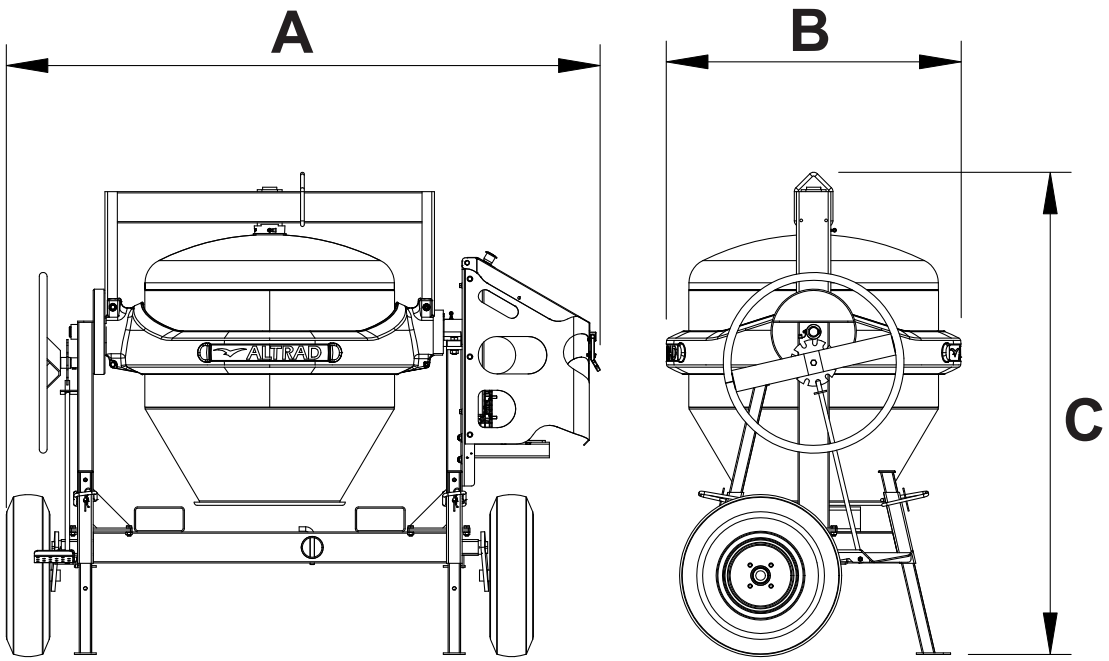



Husqvarna BV 30 Walk-Behind Concrete Power Screed

SPECIFICATIONS

Engine:

Motor/engine model
4-stroke Honda GX 35
Power output
1.6 hp
Fuel tank volume
0.65 l
Model (only integration)
BV 30

Specifications:

Transmission type

Centrifugal clutch

Sound and noise:

Sound level
108 dB(A)
Sound power level, measured
108 dB(A)

Quote ID / Revision Number: ....
Quote Line Number: .....
Configuration reference ..... Liftace R 5-31
Quote Creator: .....
Printing date: ..... 25/04/2019 - 12:02:41

KONECRANES®
Lifting Businesses™

REACH STACKER LIFTACE R 5-31

LIFTING DATA	
Lift capacities (at load center LC1 / LC2 / LC3)	45000 kg / 31000 kg / 15000 kg
Lift capacities (at load center LC1 / LC2 / LC3 at max lifting height)	45000 kg / 31000 kg / 15000 kg
Lift capacities in trailer legs (at load center LC1)	45000 kg
Load centers (LC1 / LC2 / LC3)	1850 mm / 3815 mm / 6315 mm
Lifting speed, unloaded / at 40 % load / at rated load	0.45 m/s / 0.34 m/s / 0.25 m/s
Lowering speed, unloaded / at rated load	0.30 m/s / 0.40 m/s

DRIVING DATA	
Drive speed forward, unloaded / at rated load	25 km/h / 25 km/h
Drive speed reverse, unloaded / at rated load	25 km/h / 25 km/h
Incline (driving ability) at rated load at 0 km/h / 2 km/h	23 % / 17 %
Towing (power ability) at rated load at 0 km/h / 2 km/h	280 kN / 206 kN

SERVICE WEIGHT / AXLE PRESSURE	
Service weight	71700 kg
Axle pressure front at load center LC1, unloaded / at rated load	38300 kg / 103000 kg
Axle pressure front at load center LC2, unloaded / at rated load	42900 kg / 97100 kg
Axle pressure rear at load center LC1, unloaded / at rated load	33400 kg / 13700 kg
Axle pressure rear at load center LC2, unloaded / at rated load	28800 kg / 5700 kg
Axle pressure in driving position, front/rear (at rated load)	87500 kg / 29200 kg

ENGINE (ELECTRONIC CONTROLLED)			
Engine make / model name	Volvo TAD-1170-VE	Torque ISO 3046 / at speed	1550 Nm / 1260 rpm
Emission approval EU / US	Stage 4 / Tier 4f	Displacement / No. of cyl. / type	11 l / 6 / Inline
Monitoring / EC / CanBus	Yes / Yes / Yes	Fuel consumption, normal usage	15 - 20 l/h
Fuel / type of engine / intercooler	Diesel / 4-stroke / Yes	Alternator, type/power / capacity	AC / 2640 W / 110 A
Power ISO 3046 / max speed	235 kW / 1450 rpm	Start battery, voltage/capacity	2 x 12 V / 200 Ah

TRANSMISSION (ELECTRONIC CONTROLLED)	
Transmission make / model / amount of gears (forward /reverse)	Dana TE-30 / 5 + 3 gears
Monitoring / reverse protection / CanBus / Clutch, type	Yes / Yes / Yes / Torque converter
Transmission type / type of shift gear	Softshift – Powershift / Automatic

STEERING AXLE & STEERSYSTEM & DRIVE AXLE & BRAKE SYSTEM	
Steer axle type / steering system	Double acting cylinder / hydraulic servo assisted
Drive axle make / model name	Kessler D102
Drive axle type / drive axle width	Differential + hub reduction / 3033 mm
Driving brake system, type / affected wheels	Oil cooled Wet Disc Brakes / drive wheels
Parking brake system, type / affected wheels	Dry disc brake / spring release / drive wheels

WHEELS	
Number of wheels, front + rear / type (*driven)	4*+2 / pneumatic
Tire pressure front / rear	1.00 MPa / 1.00 MPa
Tire dimensions (Ply rating) front / rear	18.00 x 25" (PR 40) / 18.00 x 25" (PR 40)
Rim dimension front / rear	13.00 x 25 / 13.00 x 25

HYDRAULIC SYSTEM	
Hydraulic pump make / model name	Bosch-Rexroth A11VO
Hydraulic system / pump type	Load sensing system / variable piston pump
Power-on-demand / Low energy / Separate oil tanks	Yes / Yes / Yes (hydraulics & brakes)
Hydraulic oil pressure mast / spreader	32 MPa / 21 MPa

TANK VOLUMES			
Diesel tank volume	700 l	Hydraulic tank volume	770 l

LIFTING EQUIPMENT & SPREADER	
Spreader make / type	Konecranes Liftace Top Pick Spreader MPS / Toplift (container)
Spreader functions	20-30-40 ft containers
Spreader locking containers / lifting eyes	4 x top twist locks / 4 corners
Sideshift stroke / rotation / pile slope type (pile slope stroke)	±800 mm / rotation +210:-125 deg / Manual MPS (±4 deg)

NORMS & STANDARDS		OTHERS	
Machine Directive in Europe	2006 / 42 / EC	Noise level (inside Cab/ LpAZ)	EN 12053 71 dB(A)
Stability of Industrial Trucks	ISO 22915-12	Noise level (outside at 7 m/ Lwa)	2005/88/EC 108 dB(A)
Safety of Industrial trucks	ISO 3691-2 & ISO 3691-7	Safety, Monitoring & overload system / programmable / colour	Electronic system EMC / Yes / Yes
		Manual sliding cabin / stroke	Yes / 2540mm (Stepless)

BIGGE ⚠ This information is for reference use only. Operators manual should be consulted and adhered to.
Please contact Bigge Crane and Rigging Co. at 888-337-BIGGE or email info@bigge.com for further information. ⚠ BIGGE

1.7.Measured Noise Levels



Ear protection MUST be worn if you are within 20 metres (approximately 66 feet) of the machine when the engine and other parts of the machine are running.

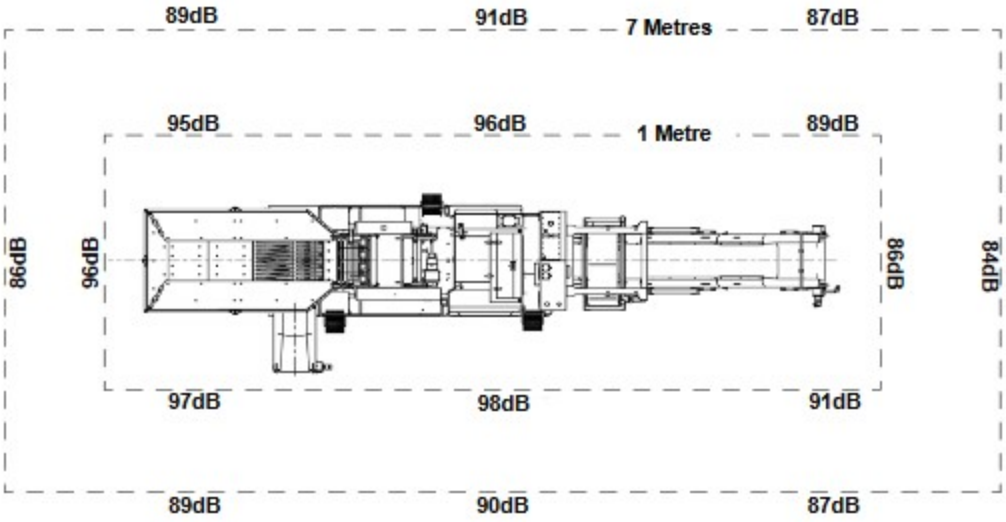

Figure 1-2: Measured Noise Levels

Refer to ***Figure 1-2:Measured Noise Levels*** the diagram indicates measured noise levels at 1 metre and 7 metres using a Castle GA101/701 meter with an empty machine all systems running situated on the factory assembly line. Product and local conditions will have an affect on the noise levels experienced.

1.8.Vibration Levels

There are **NO** circumstances where an operator should need to be on or touching the machine when it is running.

1.9.Organizational Safety Measures

The following safety measures **MUST** be observed at all times:





Understand the service procedure before commencing work.
Keep area clean and dry.
NEVER lubricate, clean, service, or adjust machinery while it is moving.
Allow machinery to cool before performing any maintenance or adjustments.
ENSURE all parts are properly installed and are in good condition.
Replace worn and broken parts IMMEDIATELY.
Remove any build up of grease, oil and debris from equipment.
During maintenance, use ONLY the correct tool for the job.
NEVER make any modifications, additions, or conversions which may affect safety.

Copyright © Sandvik Mining and Construction

A-weighted Sound Pressure Level @ 7 meters, dB(A)

See notes 2, 5 and 7-11 Listed Below

Configuration	Exhaust	Applied Load	Position (Note 2)								8 Position Average
			1	2	3	4	5	6	7	8	
Standard – Unhoused	Infinite Exhaust	0% Prime	84.3	90.4	90.3	92.3	90.6	92.7	91.6	90.0	90.8
		75% Prime	86.8	92.3	93.1	94.4	91.6	94.1	93.5	92.0	92.7
		100% Prime	87.9	93.2	94.4	95.4	91.7	94.9	94.2	92.7	93.5
		110% Prime	88.4	93.6	94.7	95.5	92.1	94.9	94.3	92.9	93.7
F200 – Weather	Genset Mounted Muffler	0% Prime	89.7	88.0	81.4	89.4	92.6	89.1	78.4	88.4	88.7
		75% Prime	91.7	89.5	83.2	91.0	93.4	90.7	80.5	90.1	90.2
		100% Prime	93.0	90.7	84.2	91.7	94.1	91.4	81.6	91.0	91.1
		110% Prime	92.9	90.9	84.4	91.8	93.8	91.5	81.9	91.3	91.1
F201 – Quiet Site II First Stage	Genset Mounted Muffler	0% Prime	82.4	76.0	70.9	70.0	74.6	70.5	69.6	76.1	76.1
		75% Prime	84.4	79.1	74.9	73.5	77.1	75.1	73.5	78.7	78.7
		100% Prime	85.4	80.1	75.7	75.0	78.0	76.1	75.1	79.6	79.7
		110% Prime	85.4	80.2	76.3	75.5	78.4	76.9	75.5	80.0	79.9
F202 – Quiet Site II Second Stage	Genset Mounted Muffler	0% Prime	67.5	68.5	69.5	70.6	73.3	70.1	68.1	67.0	69.8
		75% Prime	70.3	72.1	74.3	73.9	74.2	75.7	74.0	72.1	73.6
		100% Prime	72.2	73.2	75.3	75.3	74.8	76.9	75.5	73.4	74.8
		110% Prime	72.9	73.8	75.9	76.0	75.1	77.1	76.2	74.0	75.3

Average A-weighted Sound Pressure Level @ 1 meter, dB(A)

See notes 1, 5 and 7-14 Listed Below

Configuration	Exhaust	Applied Load	Octave Band Center Frequency (Hz)										Overall Sound Pressure Level
			16	31.5	63	125	250	500	1000	2000	4000	8000	16000	
Standard – Unhoused	Infinite Exhaust	0% Prime	N/A	47.4	62.6	84.5	89.6	93.6	95.7	95.0	91.1	81.7	69.5	100.7
		75% Prime	N/A	48.9	66.0	85.4	90.4	94.5	97.3	97.2	92.9	88.1	75.7	102.4
		100% Prime	N/A	50.0	67.5	85.8	90.5	95.2	98.0	97.9	94.1	89.3	77.1	103.2
		110% Prime	N/A	50.7	68.1	86.3	90.7	95.2	98.1	98.1	94.3	90.2	77.9	103.4
F200 – Weather	Genset Mounted Muffler	0% Prime	N/A	52.0	72.5	81.5	84.7	87.8	90.2	88.2	83.0	72.4	57.9	94.7
		75% Prime	N/A	50.2	77.7	84.0	85.0	88.4	91.5	89.9	85.0	79.0	68.5	96.2
		100% Prime	N/A	50.5	78.5	84.7	85.6	89.1	92.2	90.8	86.2	81.6	71.4	97.0
		110% Prime	N/A	50.5	78.9	85.0	85.9	89.6	92.3	90.9	86.6	82.3	71.9	97.2
F201 – Quiet Site II First Stage	Genset Mounted Muffler	0% Prime	N/A	50.7	70.9	76.6	73.9	75.5	76.4	75.8	71.2	62.2	49.2	83.3
		75% Prime	N/A	50.1	76.5	80.8	76.3	78.0	79.8	79.1	76.1	69.7	59.5	87.0
		100% Prime	N/A	49.5	77.4	81.8	77.3	80.3	80.9	80.4	77.8	72.7	62.2	88.3
		110% Prime	N/A	49.1	78.0	82.3	77.5	81.2	81.4	80.4	78.5	73.9	63.2	88.8
F202 – Quiet Site II Second Stage	Genset Mounted Muffler	0% Prime	N/A	42.8	60.4	71.4	73.3	69.6	71.0	71.1	65.8	57.7	43.0	78.8
		75% Prime	N/A	43.0	65.4	73.1	74.1	70.9	76.6	80.6	77.1	66.5	52.0	84.4
		100% Prime	N/A	43.4	67.2	74.2	74.9	72.1	78.2	81.5	78.7	70.2	54.8	85.7
		110% Prime	N/A	43.8	68.1	74.8	75.1	72.5	78.8	81.8	79.1	71.2	55.7	86.1

Performance curves

- A HL130M
- B HL110M
- C HL160M
- D HL260M
- E HL150M
- F HL125M
- G HL250M
- H HL200M
- I HL225M
- J HL100M
- K HL80M

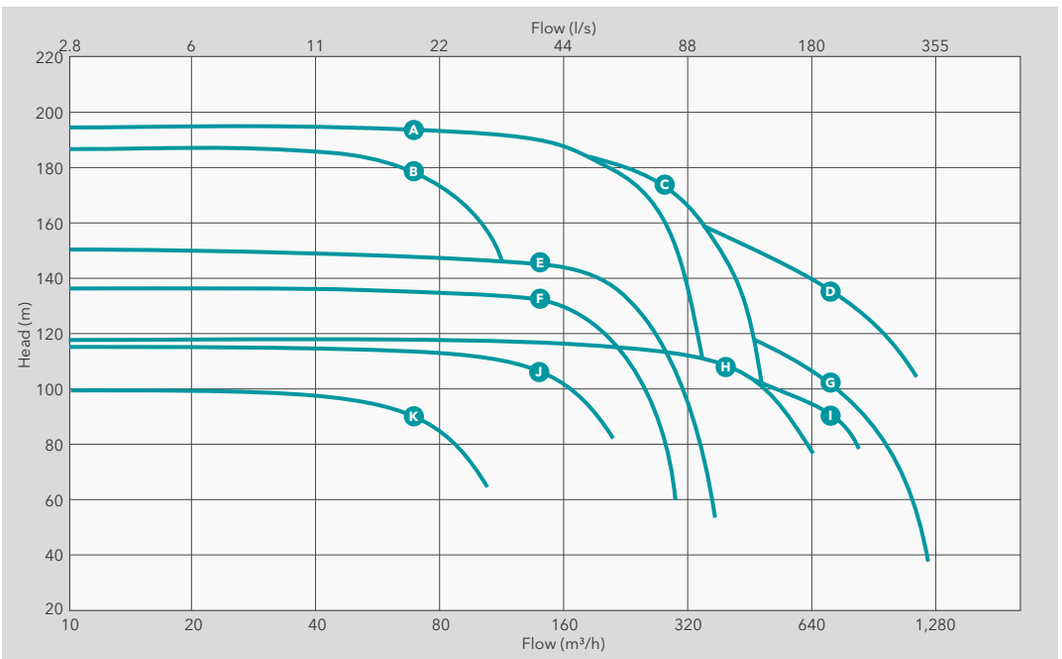

Composite curves for comparison purposes only. Consult engineering data for exact flow and head capabilities.

				EXTREME HIGH HEAD			
	HL200M	HL225M	HL250M	HL110M	HL130M	HL160M	HL260M
	200	250	300	100	150	200	250
	150	200	250	80	100	150	200
	38	65	65	20	22	35	50
8)	Caterpillar C9	Caterpillar C15	Caterpillar C15	Perkins 1106D-E66TA (129)	Caterpillar C9	Caterpillar C15	Volvo TAD1643VE
	850	850	685	390	850	685	685
	1200 to 2100	1200 to 2000	1200 to 2000	1400 to 2200	1200 to 2000	1200 to 2000	1200 to 1800
	25 to 220	30 to 275	40 to 305	20 to 105	30 to 240	30 to 300	60 to 560
	Skid	Skid	Skid	Skid	Skid	Skid	Skid
	3700×1700×2200	3700×1700×2200	4000×1950×2220	2500×1300×1900	3700×1700×2200	5000×2205×2210	4300×1980×2525
	4750	6236	6330	3000	5331	6440	6900
	70	64	64	68	70	64	N/A
	Skid	Skid	Skid	Skid	Skid	Skid	N/A
	4580×2065×2545	5500×2700×2500	5500×2700×2500	3350×1300×1887	4580×2065×2545	5500×2700×2500	N/A
	5968	9050	9200	3600	6550	9200	N/A
	75	110	132	37	75	132	280
	400/3~	400/3~	400/3~	400/3~	400/3~	400/3~	400/3~
	131	191	229	66	131	229	470
	1450	1450	1450	1450	1450	1450	1450
	2550×1450×1750	2800×1510×1800	3000×1510×1800	2015×1150×1450	2680×1450×1750	3000×1510×1800	4000×1750×1900
	2400	2950	3100	1700	2500	3125	4750

With reservation for changes. For additional specifications, see product technical documentation.

Standards

ROPS/FOPS/OPS

- ROPS (Rollover Protective Structure) offered by Caterpillar for the machine meets ROPS criteria ISO 3471:2008.
- FOPS (Falling Object Protective Structure) meets ISO 3449:2005 Level II.
- OPS (Operator Protective Structure) screens meet OPS criteria per ISO 8084:2003 and WCB G604:2011.

Brakes

- Brakes meet the standard ISO 10265:2008.

Sound and Vibration – Cab

Sound Level Information

- The declared dynamic operator sound pressure level is 76 dB(A) when "ISO 6396:2008" is used to measure the value for an enclosed cab. The measurements were conducted at 70% of the maximum engine cooling fan speed. The sound level may vary at different engine cooling fan speeds. The cab was properly installed and maintained. The measurements were conducted with the cab doors and the cab windows closed.

  NOTE: The dynamic operator sound pressure level uncertainty is ±2 dB(A).
- Hearing protection may be needed when the machine is operated with an open operator station, in a noisy environment, or with a cab that is not properly maintained.
- The guaranteed exterior sound power level is 109 dB(A) when the value is measured according to the dynamic test procedures and the conditions that are specified in "ISO 6395:2008." The measurements were conducted at 70% of the maximum engine cooling fan speed. The sound level may vary at different engine cooling fan speeds.
- Sound Level Information for Machines in European Union Countries and in Countries that Adopt the "EU Directives." The information below applies to only the machine configurations that have the "CE" mark on the Product Identification Plate. If equipped, the certification label – 109 dB(A) – is used to verify the environmental sound certification of the machine to the requirements of the European Union. The value that is listed on the label indicates the guaranteed exterior sound power level (L_{WA}) at the time of manufacture for the conditions that are specified in "2000/14/EC."

Sustainability – Sound and Vibration Levels

Sound Levels

Guaranteed Exterior Sound Power	
2000/14/EC ISO 6395:2008	109 dB(A)
Dynamic Operator Sound Pressure Level (L_{WA})	
ISO 6396:2008	76 dB(A)

Vibration Levels

- The hand/arm vibration per ISO 5349:2001 of this machine is below 2.5 m/s^2, for an experienced operator in a dozing application.
- The whole body vibration per ISO/TR25398:2006 of this machine is below 0.5 m/s^2 for an experienced operator in a dozing application.
- Operator's seat meets the input "spectral class EM6" according to ISO 7096:2000. Seat has a transmissibility factor of "SEAT<0.7."

Air Conditioning System

The air conditioning system on this machine contains the fluorinated greenhouse gas refrigerant R134a (Global Warming Potential = 1430). The system contains 1.6 kg of refrigerant which has a CO_2 equivalent of 2.288 metric tons.

Air Conditioning System

The air conditioning system on this machine contains the fluorinated greenhouse gas refrigerant R134a (Global Warming Potential = 1430). The system contains 1.36 kg of refrigerant which has a CO_2 equivalent of 1.946 metric tonnes.

Advanced Cabin Filtration

Operator Cabin

- Distributed HVAC ducting with automatic temperature control and blower speed provides ultimate operator comfort with less user input.
- Reduced maintenance of the condenser core with automatic reversing fans.
- Cat Advanced Cabin Filtration is standard.

Cat Advanced Cabin Filtration

- Operator protection from respirable particulate (0.3-10 micron size).
- Sustainably pressurized cab (US Silica compliant).
- Reduced maintenance with longer life, high efficiency filters.
- Protection for all cabin components: electronics, etc.
- Helps meet U.S. Occupational Safety and Health Administration Silica Rule Table 1 requirements for operator cabs.
- Multi-tiered filter offerings for optional efficiency upgrades. Contact Cat dealer for availability.
  - MERV 16 – Standard Equipment
  - HEPA
  - Activated Carbon + HEPA
  - ABEK1 + HEPA

Standards

Rollover Protective Structure (ROPS)/ Falling Object Protective Structure (FOPS)

- ROPS meets ISO 3471:2008, FOPS meets ISO 3449:2005 Level II.

Brakes

- Brakes meet the International Standard ISO 10265:2008.

Sound Level Information

Hearing protection may be needed when the machine is operated with an open operator station, in a noisy environment, with a cab that is not properly maintained, or when the doors and windows are open for extended periods of time.

Sound Level			Test Method
Operator Sound Pressure Level	D6	77 dB(A)*	"ISO 6396:2008"(1)
	D6 XE	76 dB(A)*	
Exterior Sound Power Level	D6	113 dB(A)	"ISO 6395:2008"(2)
		111 dB(A)*	"ISO 6395:1988"(2)
	D6 XE	111 dB(A)	"ISO 6395:2008"(2)
		111 dB(A)*	"ISO 6395:1988"(2)

*Including machines required to meet applicable regional regulations of Ukraine, United Kingdom, and Countries that Adopt the "EU Directives"; or machines equipped with the sound-suppression package.

(1) The measurement was conducted at 70% of the maximum engine cooling fan speed. The sound level may vary at different engine cooling fan speeds. The measurement was conducted with the cab doors and the cab windows closed. The cab was properly installed and maintained.

(2) The measurement was conducted at 70% of the maximum engine cooling fan speed. The sound level may vary at different engine cooling fan speeds.

The sound levels listed above include both measurement uncertainty and uncertainty due to production variation.

Standards

- ROPS (Rollover Protective Structure) offered by Caterpillar for the machine meets ROPS criteria ISO 3471:2008.
- FOPS (Falling Object Protective Structure) meets ISO 3449:2005 Level II.

Sound Level Information

Hearing protection may be needed when the machine is operated with an open operator station, in a noisy environment, with a cab that is not properly maintained, or when the doors and windows are open for extended periods of time.

Sound Level		Test Method
Operator Sound Pressure Level	83 dB(A)	"ISO 6396:2008" (1)
	81 dB(A)*	
Exterior Sound Power Level	117 dB(A)	"ISO 6395:2008" (2)
	113 dB(A)*	"ISO 6395:1988" (2)

* For machines required to meet applicable regional regulations of Ukraine and countries that adopt the "EU Directives"; or machines equipped with the sound-suppression package.

(1) The measurement was conducted at 70% of the maximum engine cooling fan speed. The sound level may vary at different engine cooling fan speeds. The measurement was conducted with the cab doors and the cab windows closed. The cab was properly installed and maintained.

(2) The measurement was conducted at 70% of the maximum engine cooling fan speed. The sound level may vary at different engine cooling fan speeds.

The sound levels listed above include both measurement uncertainty and uncertainty due to production variation.

D8T Waste Handler Specifications

Transmission

1 Forward	3.5 km/h	2.2 mph
1.5 Forward	4.8 km/h	3.0 mph
2 Forward	6.6 km/h	4.1 mph
3 Forward	11.3 km/h	7.0 mph
1.5 Reverse	4.8 km/h	3.0 mph
2.0 Reverse	6.4 km/h	4.0 mph
2.5 Reverse	8.7 km/h	5.4 mph
3.0 Reverse	11.8 km/h	7.3 mph
Drawbar Pull		
1 Forward	659.2 kN	148,200 lbf
1.5 Forward	490.8 kN	110,350 lbf
2 Forward	366.1 kN	82,300 lbf
3 Forward	205.8 kN	46,250 lbf

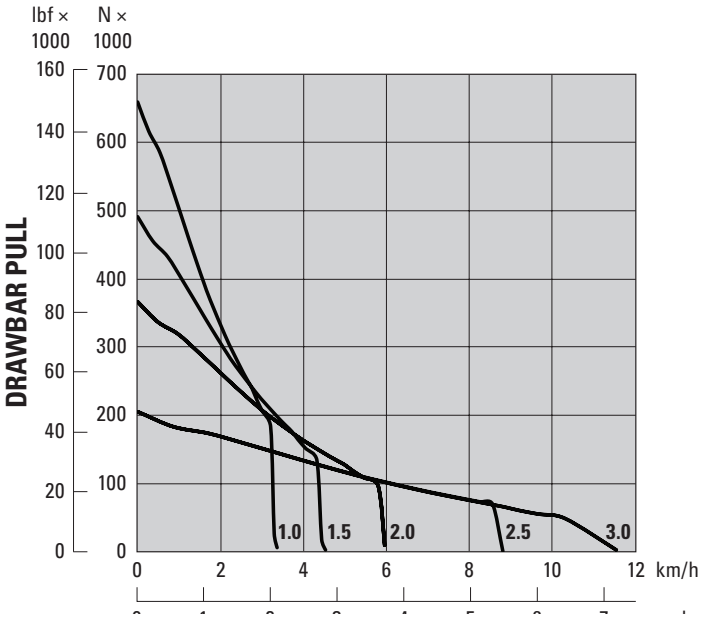

Standards

- The declared dynamic operator sound pressure level is 76 dB(A) when "ISO 6396:2008" is used to measure the value for an enclosed cab. The measurement was conducted at 70% of the maximum engine cooling fan speed. The sound level may vary at different engine cooling fan speeds. The measurement was conducted with the cab doors and the cab windows closed. The cab was properly installed and maintained.
- Hearing protection may be needed when the machine is operated with an open operator station for extended periods or in a noisy environment. Hearing protection may be needed when the machine is operated with a cab that is not properly maintained or when the doors and windows are open for extended periods.
- **Sound Level Information for Machines in European Union Countries and in Countries that Adopt the "European Union Directives"** – The information below applies to only the machine configurations that have the "CE" mark on the Product Identification Plate.
- The declared dynamic operator sound pressure level is 75 dB(A) when "ISO 6396:2008" is used to measure the value for an enclosed cab. The measurement was conducted at 70% of the maximum engine cooling fan speed. The sound level may vary at different engine cooling fan speeds. The measurement was conducted with the cab doors and the cab windows closed. The cab was properly installed and maintained.
- The declared exterior sound power level is 113 dB(A) when the value is measured according to the dynamic test procedures and the conditions that are specified in "ISO 6395:2008." The measurement was conducted at 70% of the maximum engine cooling fan speed. The sound level may vary at different engine cooling fan speeds.

ROPS/FOPS

- Rollover Protective Structure (ROPS) meets the following criteria: ISO 3471:2008.
- Falling Object Protective Structure (FOPS) meets the following criteria: ISO 3449:2005 Level II.

Brakes

- Crawler Machine Brake Requirements meets the following criteria: ISO 10265:2008.

ERGONOMIC DESIGN
An ergonomic handle, stepless forward/backward control and compact design make these units easy to maneuver.

EASY TRANSPORT
Fold-up handles make the unit convenient to transport and store.

LOWER EMISSIONS
A 4-stroke engine with an effective carburetor and a high-capacity air filter allow lower exhaust emissions and reduce service requirements.



STAY PRODUCTIVE
58 liter (12.75 gal) water tank minimizes refilling stops.

LONG SERVICE LIFE
Hydraulic oil-cooling system reduces unplanned stops and extends machine life.

WALK BEHIND DRUM ROLLERS	MR7005	MR7005 EPA
Operating Weight kg (lb)	765 (1687)	765 (1687)
Centrifugal Force kN (lbf)	21.8 (4,900)	21.8 (4,900)
Max. Forward Speed m/min (ft/min)	60 (196,9)	60 (196,9)
Drum Width mm (in)	650 (25,6)	650 (25,6)
Engine	Hatz 1D42S Diesel	Hatz 1D42S Diesel
Power at Rated Speed kW at rpm (hp at rpm)	7.2 (9.7)	7.2 (9.7)
Sound Power Level Guaranteed* dB(A)	107	107
Sound Pressure at Operator's Ear* dB(A)	88	88
H/A Vibrations* m/s^2	4.1	4.1
Frequency Hz	58	58
Part Number	3382 0005 56	3382 0005 57

*Full details of measurement are available in the Safety and Operating Instruction of the product.



Cat®
735B

Articulated Truck

New Features:

- **C15 Engine with ACERT™ Technology meeting Tier 4 Interim/ EU Stage IIIB engine emission regulations**
- **Cat® "on-the-go" Regeneration System**
- **Controlled Throttle Shift (CTS) Transmission**
- **Automatic Traction Control (ATC)**
- **Operator and Passenger grab handles**
- **Floor-mounted accelerator pedal**
- **Park brake switch – guarded by raised dash moldings**
- **Dash dimmer switch**
- **Headliner with radio mounting**
- **Machine width position lamps**
- **Electric hood switch mounted in-cab**
- **External grab rail around cab roof**
- **Improved fuse panel**
- **Color Multi-Purpose Display (CMPD) incorporating the rearview camera screen and cycle counter**
- **Machine Security System Tornado-ready (optional)**
- **External roof-level work lights (optional)**
- **Motorized heated mirrors (optional)**

Specifications

Engine

Engine Model	Cat® C15 ACERT™	
Gross Power – SAE J1995	337 kW	452 hp
Net Power – SAE J1349	326 kW	437 hp
Net Power – ISO 14396	333 kW	447 hp
Bore	137 mm	5.4 in
Stroke	171.5 mm	6.75 in
Displacement	15.2 L	926 in^3

- The power ratings apply at rated speed of 1,700 rpm when tested under the conditions for the specified standard.
- The net power advertised is the power available at the flywheel when the engine is equipped with alternator, air cleaner, muffler and fan at minimum speed.
- Net power when the fan is at maximum speed is 300 kW (402 hp) per the SAE reference conditions.
- The 735B meets EPA Tier 4 Interim/EU Stage IIIB emission specifications for the U.S. and Europe through 2013
- No engine derating required below 3800 m (12,500 ft).
- Peak engine torque gross (SAE J1995) 2320 N-m (1,711 lb-ft)
- Peak engine torque net (SAE J1349) 2276 N-m (1,679 lb-ft)
- Peak engine torque speed (1,200 rpm)

Weights

Rated Payload	32.7 tonnes	36 tons

Body Capacities

Heaped SAE 2:1	19.7 m^3	25.8 yd^3
Struck	14.7 m^3	19.2 yd^3
Tailgate Heaped SAE 2:1	20.9 m^3	27.3 yd^3
Tailgate Struck	15.2 m^3	19.9 yd^3

Transmission

Forward 1	8.3 km/h	5.1 mph
Forward 2	11.3 km/h	7 mph
Forward 3	15.3 km/h	9.5 mph
Forward 4	20.6 km/h	12.8 mph
Forward 5	27.3 km/h	17 mph
Forward 6	37.7 km/h	23.4 mph
Forward 7	51.1 km/h	31.8 mph
Reverse 1	8 km/h	5 mph
Reverse 2	10.8 km/h	6.7 mph

Sound Levels

Interior Cab	79 dB(A)

- The operator sound exposure Leq (equivalent sound pressure level) measured according to the work cycle procedures specified in ANSI/SAE J1166 OCT 98 is 79 dB(A), for the cab offered by Caterpillar, when properly installed and maintained and tested with the doors and windows closed.
- Hearing protection may be needed when operating with an open operator station and cab (when not properly maintained or doors/windows open) for extended periods or in noisy environments.

CAT®

A flexible and versatile rig which delivers a fast return on investment

The FlexiROC D65 is a reliable and versatile machine. It offers a total drilling solution which is able to perform various applications such as production drilling, pre-split holes, de-watering holes and in-pit grade control when equipped with the Reverse Circulation (RC) option.



+ Built for high efficiency mining

Whether operating in quarries or open pit mines, the FlexiROC D65 delivers straight and smooth holes. This rig has plenty of air available to keep the hole clean for easy charging. The highly efficient DTH hammer is matched precisely with the compressor to provide optimum performance.
The FlexiROC D65 from Epiroc is the result of decades of experience and know-how gained from the toughest mining and quarrying conditions.



+ Designed through evolution

At Epiroc, we never stop learning. We believe it's important to talk to you – our customers. As a result, we are constantly evolving and learning new ways to get the job done better, more efficiently and above all, safely. Continuous customer feedback and our years of experience from all over the world have assisted in developing the FlexiROC D65. The rig is designed to perform shift-after-shift in the most demanding mining applications.



+ Flexible and versatile

Delivering value across a broad spectrum of applications is important for a fast return on investment. The FlexiROC D65 is available with both standard or long feeds and is capable of drilling at a wide range of angles.
This machine is ready for work in any almost any situation and is designed to help ensure your profitability.



A comprehensive service offering

Even the best equipment needs to be serviced regularly to make sure it sustains peak performance. An Epiroc service solution offers peace of mind, maximizing availability and performance throughout the lifetime of your equipment. We focus on safety, productivity and reliability.

By combining genuine parts and an Epiroc service from our certified technicians, we safeguard your productivity – wherever you are.

Technical specifications

Main components

- Crawler type two speed undercarriage withtrack oscillation system
- Tier 4 Final/Stage 5 or Tier 3 CAT turbo-charged diesel engine
- Atlas Copco screw-type high pressure compressor
- ROPS and FOPS-approved operator cabin with rubber vibration dampers
- Single section boom system
- Aluminum profile feed beam
- Toe-hole drilling capability (standard feed version)
- Carousel type tube handling system
- Break-out table with pressure regulating kit
- Hydraulic operated rotary head
- Built for use with 4", 5", and 6" down-the-hole hammers
- Service hand lights inside canopy

Hole range & length (recommended)

		Metric	US
FlexiROC D65	COP 44 GoldCOP 54 Gold, COP 64 GoldCOP 66	110-203 mm	4.31"-8"
Hydraulic tube handling system for max hole length, with 5 m (16,4') tubes – standard feed			
FlexiROC D65	Ø 89-114 mm (3.5"- 4.5") drill tubes	45 m	148'
FlexiROC D65	Ø 127-140 mm (5"- 5.5") drill tubes	25 m	82'
Hydraulic tube handling system for max hole length, with 6 m (20') tubes and a 7.5 m starter tube – long feed			
FlexiROC D65	Ø 89-114 mm (3.5"- 4.5") drill tubes	55.5 m	182'
FlexiROC D65	Ø 127-140 mm (5"- 5.5") drill tubes	31.5 m	103'
Single pass drilling, max hole length			
FlexiROC D65 standard feed		5.4 m	18'
FlexiROC D65 long feed		7.5 m	25'

RHS 140 is standard on the FlexiROC D65. It can handle pipe sizes 76, 89, 102, 114, 127, 140 mm. With the standard feed, RHS 102 is available as option and can handle pipe sizes 76, 89, 102 mm.

Engine

FlexiROC D65	Metric	US
CAT C15, turbo-charged, diesel engine, Tier 4 Final /EU Stage 5 (multi-certified for US and EU markets) or Tier 3/ stage IIIA - power rating at 1800 rpm	403 kW	540 HP

Compressor

FlexiROC D65	Metric	US
Atlas Copco XRX 10 two-stage screw type compressor		
Working pressure, max	30 bar	435 psi
FAD (30 bar)	470 l/s	995 cfm

Rotary head

	Connection thread	Max (rpm)	Max torque, drilling		Suitable for DTH-hammer
			Metric	US	
DHR6 H 45	API 2 3/8" REG, box	137	1 839 Nm	1 356 lbf	COP 44 Gold (COP 54 Gold)
DHR6 H 56	API 3 1/2" REG, box	107	2 353 Nm	1 735 lbf	COP 54 Gold COP 64 Gold COP 66
DHR6 H 68	API 3 1/2" REG, box	68	5 100 Nm	3 761 lbf	COP 64 Gold COP 66
DHR6 H 78	API 3 1/2" REG, box	54	6 400 Nm	4 720 lbf	COP 64 Gold COP 66

Carrier

	Metric	US
Tramming speed, max/min	3.3/1.8 kph	2.0/1.1 mph
Traction force, max	138 kN	31020 lbf
Ground clearance	405 mm	16"
Track oscillation	±10°	

Hydraulic system

Hydraulic oil cooler	Metric	US
Max ambient temperature	50 °C	122 °F
Pumps		
Axial piston pump (1)	240 l/min	63 gal/min
Gear pump (2)	111 l/min	29 gal/min
Gear pump (3)	63 l/min	16.6 gal/min
Gear pump (4)	39 l/min	10.3 gal/min
Gear pump (5)	31 l/min	8.2 gal/min
Gear pump (6)	31 l/min	8.2 gal/min
Return and drainage filters (2 x 3 filters)		
Filtration rate 20 µm absolute	20 µm absolute	

Aluminum feed

Aluminum profile feed with hose guide and double drill tube support with break-out table and movable lower guide/dust hood	Metric	US
Feed rate, max	0.9 m/s	177 ft/min
Feed force, max	40 kN	8992 lbf
Tractive pull, max	50 kN	11240 lbf
Feed motor size	2099 cc	0.6
Chain size	45 mm	1.8"
Long Feed		
Feed extension	1150 mm	45.3"
Travel length	7540 mm	296.8"
Total length	11600 mm	456.7"
Standard Feed		
Feed extension	1900 mm	74.8"
Travel length	5400 mm	212.6"
Total length	9400 mm	370"

Sound and vibration*

Cabin: A-weighted Sound Pressure Level, LpA			79 dB
Cabin: Weighted whole body vibration level, a_w			< 0.5 m/s²
A-weighted Sound Power Level, LwA			124 dB
A-weighted sound pressure level, LpA, calculated (distance from rig)			
10 m	96 dB	160 m	72 dB
20 m	90 dB	320 m	66 dB
40 m	84 dB	640 m	60 dB
80 m	78 dB	1280 m	54 dB

** The declared noise emission values should be combined with a measurement uncertainty of KpA=6 dB. The sum of declared measured value and the uncertainty value represent an upper limit of the range, in which measured values are likely to be included. The values were determined in accordance with the standards ISO 3744:2010 (for sound power level estimation), ISO 11203:1995 (for sound pressure calculation at different distances from the rig), ISO 11201:2010 (for operator cabin sound pressure level) and ISO 2631-1 (for whole body vibration).*

Dust collector

DCT 320 including pre-separator	Metric	US
Filter area	32 m²	344 sq.ft
Suction capacity at 500 mm wg	1270 l/s	2690 cfm
Suction hose diam	203 mm	8"
Cleaning air pressure, max	8 bar	116 psi
Cleaning air consumption	2-4 l/pulse	0.06-0.12 cfm/pulse
Number of filter elements	32 pcs	

Rig cooling system

Combi-cooler (charge air, water, hydraulic oil) with 645 mm fan, computer controlled speed.

	Metric	US
Maximum operational ambient air temperature	50°C	122°F

Recovery winch

	Metric	US
Cable rope	10 mm x 35 m	0.40" x 38.3 yards
Pull on 1st layer	20 kN	4496 lbf
Speed on 1st layer	40 m/min	44 yards/min

Splitter options

Type of splitter
Riffle
Cone
Rotary/oscillation

Line oiler

	Metric	US
Hammer lubrication tank capacity	12 l	3.2 gal
Line oiler activated and controlled from rig control system (RCS)		
Adjustable capacity		

Hydraulic jacks

	Metric	US
Max. extension x2 front hydraulic jacks	500 mm	19.7"
Max. extension x2 rear hydraulic jacks	500 mm	19.7"

Pipe rack capacity

Rack capacity	Metric	US
30 pipes	Outer diameter 114.3 mm Length 3 m	Outer diameter 4.5" Length 118" (9.84 ft)
30 pipes	Outer diameter 101.6 mm Length 3 m	Outer diameter 4" Length 118" (9.84 ft)

Control system

CAN technology (Controller Area Network)
Separate 24V DC support system
I/O modules (Input/Output)

Safety alert system

6 emergency stop buttons - x1 on control panel, x1 on each remote control unit, x4 on the rig
Horn

Electrical system

Starter motor	24 V
Alternator	24 V, 70A
Main batteries x2	12 V, 145 A per battery

Working dimensions

	Metric	US
A	7 840 mm	309"
B	6 120 mm	241"

Transport dimensions

	Metric	US
C	2 740 mm	108"
D	2 980 mm	118"
E	7 730 mm	305"
F	2 240 mm without rod rack installed 2 800 mm with rod rack installed	89" without rod rack installed 110" with rod rack installed

Transport dimensions

	Metric	US
Drill rig	14 400 kg	31 747 lbs
Shipping dimensions	7 800 x 3 000 x 2 300 mm	307 x 118 x 90.5"

Water/foam pump

Hydraulically driven high pressure pump HPW200/30-45

	Metric	US
Maximum water flow	30 l/min	7.9 gal/min
Maximum water pressure	200 bar	2 900 psi
Pump power	10 kW	13.4 hp
Suction head	3 m	10 ft
Weight	8 kg	17.6 lbs

Sound*

A-weighted Sound Power Level, LwA	118 dB
A-weighted sound pressure level, LpA, calculated	
Distance from rig	**Level**
4 m	98 dB
10 m	90 dB
20 m	84 dB
40 m	78 dB
80 m	72 dB
160 m	66 dB
320 m	60 dB
640 m	54 dB
1280 m	48 dB

** The declared noise emission values should be combined with a measurement uncertainty of KpA=6 dB. The sum of declared measured value and the uncertainty value represent an upper limit of the range, in which measured values are likely to be included. The values were determined in accordance with the standards ISO 3744:2010 (for sound power level estimation) and ISO 11203:1995 (for sound pressure calculation at different distances from the rig).*

Technical specifications

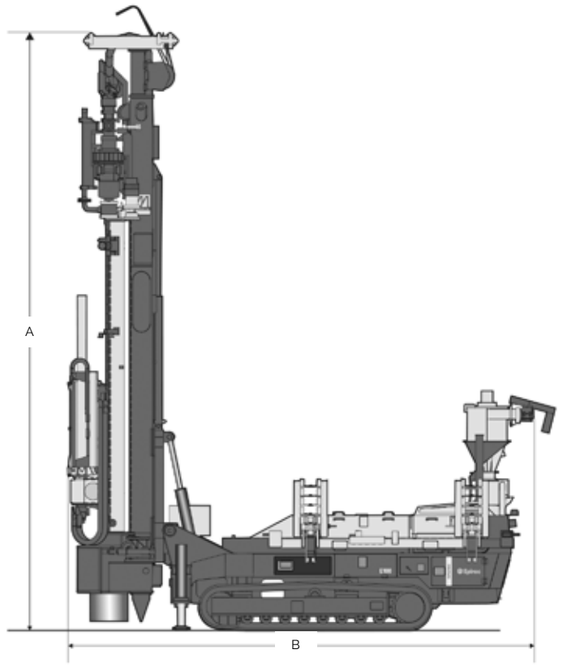

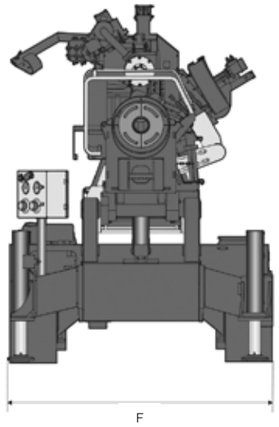

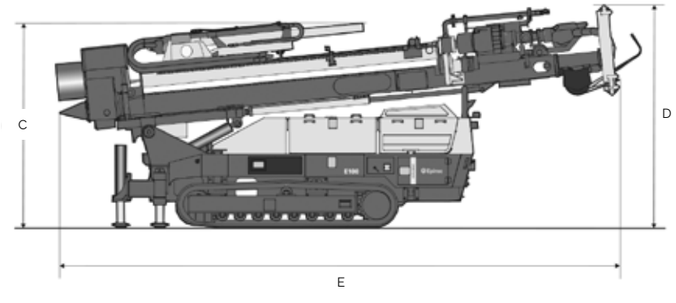

Tower, carousel and drill rod handling

Tower		
Tower construction	Fully welded four main member with open front ASTM A500 Grade B rectangular tubing	
Tower raising	Two hydraulic cylinders; live tower (raise and lower with full carousel and rotary head at top of tower)	
Rod support	Hydraulic cylinder actuation to center drill rod	
Rated capacity		
Single pass depth (clean hole with drill bit above the table)	Standard 35 ft rod tower: 35 ft (10.7 m), optional 40 ft rod tower: 40 ft (12.2 m)	
Maximum hole depth	Standard 35 ft rod tower: 210 ft (64 m), optional 40 ft rod tower: 240 ft (73.2 m)	
Carousel (carousel internal to the tower with key-lock retention)		
Rod length	Standard: 35 ft (10.7 m), optional: 40 ft (12.2 m)	
Capacity	• Five pieces of 4-1/2 in or 5 in rods (114 mm or 127 mm) • Four pieces of 5 in or 5-1/2 in (127 mm or 140 mm) • Three pieces of 6-1/4 in or 7 in (159 mm or 178 mm) • Once piece of 8 in (203 mm)	
Actuation	Two hydraulic cylinders	
Safety	• Drill pipe is held securely in carousel by "key lock design" mechanism • No bump system to prevent damage if carousel not stowed	
Drill rods (35 ft (10.7 m) or 40 ft (12.2 m) rods		
Drill pipe diameter	**Thread**	**Suggested bit diameter**
4-1/2 in (114 mm)	3-in BECO	6-3/4 in (171 mm)
5 in (127 mm)	3-1/2 BECO	6-3/4 in – 7-3/8 in (171 mm – 187 mm)
5-1/2 in (140 mm)	3-1/2 in BECO	6-3/4 in – 7-7/8 in (171 mm – 200 mm)
6-1/4 in (159 mm)	4 in BECO	7 7/8 in - 9 in (200 mm – 229 mm)
7 in (178 mm)	4-1/2 in BECO	9 in (229 mm)
7-5/8 in (194 mm)	5 1/4 in BECO	9-7/8 in (251 mm)
8 in (203 mm)	5-1/4 in BECO	9-7/8 in – 10-5/8 in (251 mm – 270mm)
Rotary head (standard 4SV-2-10 or optional direct drive rotary head)		
Speed range	Variable 0 – 190 RPM, Optional 0 – 200 RPM	
Torque	Variable 0 – 8,200 lbf-ft (0 – 11,118 Nm), Optional 0 – 8,500 lb-ft (0 – 11,524 Nm)	
Number of motors	Standard: Two, Optional: One	
Type of motor	Standard: One variable displacement axial piston and one fixed, Optional: Vane	
Reduction	Standard: 15:1, Optional: 1:1	
Travel length	Standard 35 ft rod tower: 43 ft (13.11 m), Optional 40 ft rod tower: 45 ft 7 in (13.89 m)	
Feed system		
Pulldown capacity	Up to 65,000 lbf (0 – 289 kN)	
Pullback capacity	0 – 27,000 lbf (0 – 120 kN)	
Weight on bit	35 ft rod tower: variable, 0 – 70,720 lb (0 – 32,078 kg) 40 ft rod tower: variable, 0 – 71,330 lb (0 – 32,355 kg)	
Mechanism type	One hydraulic cylinder and feed cables	
Number of cables - diameter	Two pulldown – 1 in (25.4 m), Two pullback – 7/8 in (22.2 mm)	
Number of sheeves - outside diameter	Eight – 24.5 in (622 mm)	
Feed speed	140 ft/min (42.7 m/min)	
Retract speed	202 ft/min (61.6 m/min)	

Cab and controls

Cab	
• Quiet, single piece design with no seams or leaks (tested @ less than 80 dBA) • Insulated, pressurized with heater and under cab mounted air conditioning • Falling object protective structure (FOPS) certified • Ergonomically designed control system and excellent visibility (with unobstructed view to drill table)	
Controls (Standard Rig Control System – RCS)	
RCS Control	**Integrated control touchscreen** (penetration rate, rotation torque, rotation pressure, pulldown force, pulldown pressure, hole depth indicator, etc.) **Two joy sticks** (attached to the operator's seat) and push buttons on the operator panel controls (propel and leveling jack, pulldown feed control, holdback feed control) **Standard interlocks/features**
Hydraulic system	
• Pumps mounted on a single three-hole gearbox, and driven off the engine through a drive shaft • Main pumps work through diverter valves to control feed/rotation and propel • Hydraulic oil cooler provided standard: assures proper oil temperature (improve system efficiency, and increase component life) • Easy servicing with ease of access to the pumps, filters and valve bay area and simplified tracing of hosing	

Power package

Airend	
	1,600 cfm / 110 psi (45.3 m^3/min / 7.6 bar) 1,900 cfm / 110 psi (53.8 m^3/min / 7.6 bar) 1,300 cfm / 435 psi (36.8 m^3/min / 30 bar) 1,530 cfm / 350 psi (43.3 m^3/min / 24 bar)
Electronic Air Regulation System (EARS)	
• Standard on the PV-235 • Deliver variable air volume control (within system capacity), while still maintaining constant air pressure • Optimal fuel efficiency while hole collaring • Reduced wear on drill string components	
Diesel Engine	
Diesel engine – non Tier 4	CAT C18 T3 – 630 HP (470 kW) CAT C27 T2 – 800HP (597 kW) Cummins QSK19 T2 – 760 HP (567 kW)
Diesel engine – Tier 4	Cummins QSK23 T4F – 860 HP (641 kW)

Electrical System

System voltage	24 V	
Minimum Recommended Battery Capacity		
cold soak at 10 deg C (50 deg F) and above		
cold soak at 0 to 10 deg C (32 to 50 deg F)		
cold soak at -18 to 0 deg C (0 to 32 deg F)	1,800 CCA	
Maximum starting circuit resistance	0.002 Ohm	

Cold start capability

Unaided Cold Start		
Minimum cranking speed		150 RPM
Minimum ambient temperature for unaided cold start	45 deg F	7.2 deg C

Performance Data

All data is based on:

- Engine operating with fuel system, water pump, lubricating oil pump, air cleaner and exhaust silencer; not included are battery charging alternator, fan, and optional driven components.
- Engine operating with fuel corresponding to grade No. 2-D per ASTM D975.
- ISO 3046, Part 1, Standard Reference Conditions of:

Barometric Pressure :	100 kPa (29.53 in Hg)	Air Temperature:	25 °C (77 °F)
Altitude:	110 m (361 ft)	Relative Humidity:	30%

Estimated Free Field Sound Pressure Level of a Typical Generator Set; 1,500 RPM	99.7 dBa
Exhaust Noise at Rated 1 m Horizontally From Centerline of Exhaust Pipe Outlet Upwards at 45%; 1,500 RPM	97.3 dBa

		Standby Power		Prime Power	
Governed Engine Speed	RPM	1,800	1,500	1,800	1,500
Engine Idle Speed			700 - 1,200		700 - 1,200
Gross Engine Power Output	hp (kW)		1,470 (1,096)		1,326 (989)
Brake Mean Effective Pressure	psi (kPa)		336 (2,317)		303 (2,089)
Piston Speed	ft/min (m/s)		1,562 (7.9)		1,562 (7.9)
Friction Horsepower	hp (kW)		115 (86)		115 (86)
Engine Jacket Water Flow at Stated Friction Head external to Engine					
- 2.5 psi Friction Head	gpm (L/min)		274 (1,037)		274 (1,037)
- Maximum Friction Head	gpm (L/min)		209 (791)		209 (791)
Engine Data					
Intake Air Flow	ft3/min (L/s)		3,290 (1,553)		2,997 (1,414)
Exhaust Gas Temp - Dry Stack	deg F (deg C)		891 (477)		874 (468)
Exhaust Gas Flow	ft3/min (L/s)		7,892 (3,725)		7,166 (3,382)
Air to Fuel ratio			27.7:1		28.3:1
Heat Rejection to Ambient	BTU/min (kW)		6,211 (109)		5,534 (97)
Heat Rejection to Jacket Coolant	BTU/min (kW)		23,678 (416)		21,465 (377)
Heat Rejection to Exhaust	BTU/min (kW)		46,354 (815)		41,292 (726)
Heat Rejection to Fuel*	BTU/min (kW)		379 (6.7)		379 (6.7)
2P2L					
Heat Rejection to Aftercooler Coolant	BTU/min (kW)		16,544 (291)		13,745 (242)
Aftercooler Water Flow at Stated Friction Head external to Engine					
- 2.5 psi Friction Head	gpm (L/min)		137 (519)		137 (519)
- Maximum Friction Head	gpm (L/min)		116 (439)		116 (439)

*This is the maxiumum heat rejection, not specified to the load listed.

End of Report



EQUIPMENT

[STANDARD EQUIPMENT]

CABINE

Spacious, sound-insulated full-vision steel cab (ROPS certified). Sliding window in cab door.
Safety glass windows, thermo windows tinted in green. Skylight thermos window, bronze tinted.
Panoramic rear window.
Front window supported by pneumatic springs, lockable for ventilation and slidable under cab roof.
Windshield washer system.
Preparation for radio installation. Left-hand outside rear-view mirror.
Cab heating with front window defroster by coolant heat exchanger with stepless fan.
Fresh air and recirculating air filters.
Operator's seat MSG 85 (comfort version), hydraulic damping, extra-high backrest, tilt-adjustable armrests, longitudinal-horizontal suspension, mechanical lumbar support.
Lap belt. Instrument panel on the right-hand side of the operator's seat with visual & acoustic warning device, hour-meter and safety module.
Working floodlights Halogen H-3
Sound power level (LWA) 99 dB (A)
Sound pressure level (LpA) 74 dB (A)
Sound level values measured in compliance with Directive 2000/14/EC an EN474.
Effective values of acceleration for whole body less than 0.5 m/s^2.
Effective values of acceleration for hand-arm less than 2.5 m/s^2.
Vibration values in compliance with Directive 2006/42/EC and EN474.

STEERING

Independent individual control of crawler chains, also counterwise. Sensitive control provided by pilot operated hand levers combined with foot pedals. Full drawbar pull even at shifts in direction.

SWING SYSTEM

Hydrostatic drive with 2-stage planetary gear and axial piston fixed displacement motor, also acts as wear-resistant brake. In addition, spring-loaded multi-disc brake acting as parking brake	
Swing speed	0-10 min^1

KNICKMATIK®

Lateral parallel adjustment of boom arrangement at full dig depth	
Angle of articulation / lateral adjustment left	54° / 760 mm mm
Angle of articulation / lateral adjustment right	54° / 1 030 mm mm

ELECTRICAL SYSTEM

Nominal voltage	12V
Battery	12V / 135 Ah
Generator	14V / 95 Ah
Starter	12V / 4,0 kW

FLUID CAPACITIES

Fuel tank	185 l
Hydraulic system (incl. Tank)	230 l
AdBlue Tank	10 l

BRAKES

Service brake: Hydraulic pump accumulator two-circuit brake, acting on oil-immersed multi-disc brakes of front and rear axle.
Excavator brake: Acting on front and rear axle due to lockable service brake.
Auxiliary brake: Hydrostatic travel drive in closed circuit acting as non-wearing auxiliary brake
Parking brake: Hydraulic spring-loaded brake, electrically actuated

Engine

Engine Model	Cat C15 ACERT (ATAAC)
Power – ISO 9249/SAE J1349 (metric)	355 kW (483 hp)
Power – ISO 9249/SAE J1349 (imperial)	476 hp
Power – ISO 14396 (metric)	378 kW (514 hp)
Power – ISO 14396 (imperial)	507 hp
Net Power – EEC 80/1269	355 kW (476 hp)
Bore	137 mm
Stroke	171 mm
Displacement	15.2 L

- The 374D L meets EU Stage IIIA or Stage II emission requirements.
- No engine power derating required below 2300 m altitude.
- Net power advertised is the power available at the flywheel when the engine is equipped with fan, air cleaner, muffler and alternator.

Weights

Operating Weight – Long Undercarriage	71 132 kg

- Reach boom, R3.6 stick, 3.8 m^3 bucket, and 650 mm shoes.

Track

Optional for Long Undercarriage	900 mm
Optional for Long Undercarriage	750 mm
Optional for Long Undercarriage	650 mm
Number of Shoes Each Side – Standard Undercarriage	47
Number of Track Rollers Each Side – Long Undercarriage	8
Number of Carrier Rollers Each Side	3

Swing Mechanism

Swing Speed	6.4 rpm
Swing Torque	214.8 kN·m

Drive

Maximum Travel Speed	4.1 km/h
Maximum Drawbar Pull	492.5 kN
Gradeability	35°/70%

Hydraulic System

Main System – Maximum Flow (Total)	880 L/min
Swing System – Maximum Flow	360 L/min
Maximum Pressure – Equipment – Normal	35 000 kPa
Maximum Pressure – Travel	35 000 kPa
Maximum Pressure – Swing	29 400 kPa
Pilot System – Maximum Flow	880 L/min
Pilot System – Maximum Pressure	4120 kPa
Boom Cylinder – Bore	190 mm
Boom Cylinder – Stroke	1792 mm
Stick Cylinder – Bore	210 mm
Stick Cylinder – Stroke	2118 mm
VB2-Family Bucket Cylinder – Bore	190 mm
VB2-Family Bucket Cylinder – Stroke	1443 mm
WB2-Family Bucket Cylinder – Bore	200 mm
WB2-Family Bucket Cylinder – Stroke	1457 mm

Service Refill Capacities

Fuel Tank Capacity	935 L
Cooling System	95 L
Engine Oil	65 L
Swing Drive (each)	12 L
Final Drive (each)	15 L
Hydraulic System Oil Capacity (including tank)	705 L
Hydraulic Tank Oil	360 L

Sound Performance

Performance	Meets specified standards

- Operator Sound – The operator sound level measured according to the procedures specified in ISO 6396:2008 is 76 dB(A), for cab offered by Caterpillar, when properly installed and maintained and tested with doors and windows closed.
- Exterior Sound – The labeled spectator sound power level measured according to the test procedures and conditions specified in 2000/14/EC is 107 dB(A).
- Hearing protection may be needed when operating with an open operator station and cab (when not properly maintained for doors/windows open) for extended periods or in a noisy environment.

Standards

Brakes	SAE J1026 APR90
Cab/FOGS	SAE J1356 FEB88, ISO 10262

- ISO 10262 OPS, front and top
- ISO J1356 FOGS, front and top

336 Hydraulic Excavator Specifications

Engine

Engine Model	Cat® C9.3B	
Net Power – ISO 9249	232 kW	311 hp
Engine Power – ISO 14396	234 kW	314 hp
Bore	115 mm	5 in
Stroke	149 mm	6 in
Displacement	9.3 L	568 in³

- Meets Brazil MAR-1 and China Nonroad Stage III emission standards, equivalent to U.S. EPA Tier 3 and EU Stage IIIA.
- Recommended for use up to 4500 m (14,760 ft) altitude with engine power derate above 3000 m (9,840 ft).
- Net power is tested per ISO 9249. Standards in effect at the time of manufacture.
- Net power advertised is the power available at the flywheel when the engine is equipped with fan, air intake system, exhaust system and alternator.
- Rated speed at 1,800 rpm.

Swing Mechanism

Swing Speed	8.75 rpm	
Maximum Swing Torque	144 kN·m	106,228 lbf-ft

Weights

Operating Weight	37 600 kg	82,900 lb

- Mass Boom, M2.55 m (8'4") stick, SDS 2.40 m³ (3.14 yd³) bucket, 700 mm (28") TG shoe, 6.8 mt (14,991 lb) counterweight.

Track

Standard Track Shoes Width	600 mm	24 in
Optional Track Shoes Width	700 mm	28 in
Optional Track Shoes Width	800 mm	31 in
Number of Shoes (each side)	49	
Number of Track Rollers (each side)	8	
Number of Carrier Rollers (each side)	2	

Drive

Gradeability	35°/70%	
Maximum Travel Speed	4.7 km/h	2.9 mph
Maximum Drawbar Pull	295 kN	66,206 lbf

Hydraulic System

Main System – Maximum Flow – Implement	558 L/min (279 × 2 pumps)	147 gal/min (74 × 2 pumps)
Maximum Pressure – Equipment – Implement	35 000 kPa	5,076 psi
Maximum Pressure – Equipment – Lift Mode	38 000 kPa	5,511 psi
Maximum Pressure – Travel	35 000 kPa	5,076 psi
Maximum Pressure – Swing	29 400 kPa	4,264 psi
Boom Cylinder – Bore	150 mm	6 in
Boom Cylinder – Stroke	1440 mm	57 in
Stick Cylinder – Bore	170 mm	7 in
Stick Cylinder – Stroke	1738 mm	68 in
DB Bucket Cylinder – Bore	150 mm	6 in
DB Bucket Cylinder – Stroke	1151 mm	45 in
TB Bucket Cylinder – Bore	160 mm	6 in
TB Bucket Cylinder – Stroke	1356 mm	53 in

Service Refill Capacities

Fuel Tank Capacity	600 L	158.5 gal
Cooling System	40 L	10.5 gal
Engine Oil (with filter)	32 L	8.5 gal
Swing Drive (each)	18 L	4.8 gal
Final Drive (each)	8 L	2.1 gal
Hydraulic System (including tank)	373 L	98.5 gal
Hydraulic Tank	161 L	42.5 gal

Standards

Brakes	ISO 10265:2008
Cab/ROPS	ISO 12117-2:2008

Sound Performance

ISO 6395:2008 (external)	105 dB(A)
ISO 6396:2008 (inside cab)	73 dB(A)

- Hearing protection may be needed when operating with an open operator station and cab (when not properly maintained or doors/windows open) for extended periods or in a noisy environment.

SPECIFICATIONS

ENGINE

Model ..... Komatsu SAA6D170E-7*
Type ..... Water-cooled, 4-cycle, direct injection
Aspiration ..... Turbocharged, aftercooled, cooled, EGR
Number of cylinders 6
Bore ..... 170 mm **6.69"**
Stroke ..... 170 mm **6.69"**
Piston displacement ..... 23.15 ltr **1413 in³**
Horsepower:
SAE J1995 ..... Gross 578 kW **775 HP**
ISO 9249 / SAE J1349 ..... Net 565 kW **758 HP**
Rated rpm 1800
Hydraulic fan at maximum speed ..... Net 519 kW **696 HP**
Governor ..... All-speed control, electronic
Fan drive method for radiator cooling ..... Hydraulic

*EPA Tier 4 Final emissions certified

HYDRAULICS

Type ..... Open-center load sensing system, 1 selectable working mode
Main pump:
Type ..... Variable capacity piston
Maximum flow implement and travel ..... 2 x 494 ltr/min **2 x 130.5 gal/min**
Maximum flow swing ..... 1 x 600 ltr/min **1 x 158.5 gal/min**
Sub-pump for control circuit ..... Gear type
Fan drive pump ..... Variable-capacity piston type

Hydraulic motors:
Travel ..... 2 x axial piston motors with parking brake
Swing ..... 2 x axial piston motors with swing holding brake

Relief valve setting:
Implement circuits ..... 31.4 MPa 320 kgf/cm² **4,550 psi**
Travel circuit ..... 34.3 MPa 350 kgf/cm² **4,980 psi**
Swing circuit ..... 29.4 MPa 300 kgf/cm² **4,267 psi**
Pilot circuit ..... 3.1 MPa 33 kgf/cm² **455 psi**

Hydraulic cylinders:
(Number of cylinders – bore x stroke x rod diameter)
Boom .... 2–225 mm x 2390 mm x 160 mm **8.9" x 94.1" x 6.3"**
Arm ..... 1–250 mm x 2435 mm x 170 mm **9.8" x 95.9" x 6.7"**

Bucket:
Standard. 2–160 mm x 1825 mm x 115 mm **6.3" x 71.8" x 4.5"**
SP .....2–160 mm x 1950 mm x 115 mm **6.3" x 76.8" x 4.5"**

DRIVES AND BRAKES

Steering control ..... Two levers with pedals
Drive method ..... Fully hydrostatic
Travel motor ..... Axial piston motor, in-shoe design
Reduction system ..... Planetary triple reduction
Maximum drawbar pull ..... 686 kN 70000 kgf **154,320 lbf**
Gradeability ..... 70%, 35°
Maximum travel speed:
High ..... 3.3 km/h **2.0 mph**
Low ..... 2.3 km/h **1.5 mph**
Service brake ..... Hydraulic lock
Parking brake ..... Oil disc brake

SWING SYSTEM

Drive method ..... 2 x hydraulic motors
Swing reduction ..... Planetary gear
Swing circle lubrication ..... Grease-bathed
Service brake ..... Oil disc brake
Holding brake/swing lock ..... Mechanical disc brake
Swing speed ..... 5.8 rpm
Swing torque ..... 406.1 kN•m **299,524 lb-ft**

UNDERCARRIAGE

Center frame ..... H-leg
Track frame ..... Box-section
Track type ..... Sealed
Track adjuster ..... Hydraulic
Number of carrier rollers (each side) 3
Number of shoes (each side):
Standard, SP 48
Long undercarriage 55
Number of track rollers (each side):
Standard, SP 8
Long undercarriage 10

COOLANT & LUBRICANT CAPACITY (REFILLING)

Fuel tank ..... 1,360 ltr **359.3 U.S. gal**
Coolant ..... 142 ltr **37.5 U.S. gal**
Engine ..... 86 ltr **22.7 U.S. gal**
Final drive, each side ..... 21 ltr **5.5 U.S. gal**
Swing drive ..... 2 x 20 ltr **5.3 U.S. gal**
Hydraulic tank ..... 670 ltr **177.0 U.S. gal**

SOUND PERFORMANCE

Exterior – ISO 6395 ..... 109.9 dB(A)
Operator – ISO 6396 ..... 68.5 dB(A)

OPERATING WEIGHT (APPROXIMATE)

Mass Excavation:
PC1250SP-11: Operating weight, including **25'7"** 7800 mm boom, **11'2"** 3400 mm arm, 6.7 m³ **8.8 yd³** bucket, track roller guard, operator, lubricant, coolant, full fuel tank, and standard equipment.
Backhoe:
PC1250LC-11: Operating weight, including **29'10"** 9100 mm boom, **11'2"** 3400 mm arm, 5.0 m³ **6.5 yd³** bucket, operator, lubricant, coolant, full fuel tank, and standard equipment.

Double-Grouser Shoes	PC1250SP-11		PC1250LC-11 Gauge	
	Operating Weight	Ground Pressure (ISO 16754)	Operating Weight	Ground Pressure (ISO 16754)
700 mm **28"**	118164 kg **259,960 lb**	1.54 kg/cm² **21.85 psi**		
1000 mm **39.4"**	120864 kg **265,900 lb**	1.10 kg/cm² **15.64 psi**	122409 kg **269,300 lb**	0.95 kg/cm² **13.45 psi**
1200 mm **47.25"**			123909 kg **272,600 lb**	0.80 kg/cm² **11.35 psi**

	Characteristics			Cat Lift Trucks	Cat Lift Trucks	Cat Lift Trucks	Cat Lift Trucks	Cat Lift Trucks
				DP40N3	**DP45N3**	**DP50CN3**	**DP50N3**	**DP55N3**
1.01	Manufacturer (abbreviation)			Diesel	Diesel	Diesel	Diesel	Diesel
1.02	Manufacturer's model designation			Seated	Seated	Seated	Seated	Seated
1.03	Power source: (battery, diesel, LPG, petrol)			4000	4500	5000	5000	5500
1.04	Operator type: pedestrian, (operator) - standing, - seated			500	500	500	600	600
1.05	Load capacity	Q	(kg)	577	577	582	602	602
1.06	Load centre distance	c	(mm)	1850	2000	2000	2150	2150
1.08	Load distance, axle to fork face	x	(mm)					
1.09	Wheelbase	y	(mm)					
	Weight							
2.01	Truck weight, without load / including battery (simplex mast, lowest lift height)		kg	5920	6330	6850	7300	7640
2.02	Axle loading with ma x imum load, front / rear (simplex mast, lowest lift height)		kg	8960/960	9710/1130	10600/1250	11020/1280	11740/1400
2.03	Axle loading without load, front / rear (simplex mast, lowest lift height)		kg	2630/3290	2780/3550	2900/3950	3220/4080	3170/4470
	Wheels, Drive Train							
3.01	Tyres: V=solid, L=pneumatic, SE=solid pneumatic - front / rear			L/L	L/L	L/L	L/L	SE/SE
3.02	Tyre dimensions, front			8.25-15-14PR	300-15-18PR	300-15-18PR	300-15-18PR	300-15/8,00
3.03	Tyre dimensions, rear			7.00-12-14PR	7.00-12-14PR	7.00-12-14PR	7.00-12-14PR	7.00-12/5.00
3.05	Number of wheels, front / rear (x =driven)			2x/2	2x/2	2x/2	2x/2	2x/2
3.06	Track width (centre of tyres), front	b10	(mm)	1175	1175	1175	1175	1175
3.07	Track width (centre of tyres), rear	b11	(mm)	1180	1180	1180	1180	1180
	Dimensions							
4.01	Mast tilt, forwards / backwards	∂ / ß	°	6/12	6/12	6/12	6/12	6/12
4.02	Height with mast lowered (see tables)	h1	(mm)	2320	2320	2400	2400	2400
4.03	Free lift (see tables)	h2	(mm)	150	150	150	160	160
4.04	Lift height (see tables)	h3	(mm)	3300	3300	3300	3300	3300
4.05	Overall height with mast raised	h4	(mm)	4430	4430	4430	4580	4580
4.07	Height to top of overhead guard	h6	(mm)	2295	2295	2295	2295	2295
4.08	Seat height	h7	(mm)	1082	1082	1082	1082	1082
4.12	Tow coupling height	h10	(mm)	395	395	395	395	395
4.19	Overall length	l1	(mm)	4220	4350	4390	4530	4580
4.20	Length to fork face (includes fork thickness)	l2	(mm)	3000	3130	3170	3310	3360
4.21	Overall width	b1 / b2	(mm)	1415/1965	1460/1965	1460/1965	1460/1965	1460/1965
4.22	Fork dimensions (thickness, width, length)	s / e / l	(mm)	50/150/1220	50/150/1220	50/150/1220	60/150/1220	60/150/1220
4.23	Fork carriage to DIN 15 173 A / B / no			3A	3A	3A	4A	4A
4.24	Fork carriage width	b3	(mm)	1190	1190	1190	1190	1190
4.31	Ground clearance under mast, with load	m1	(mm)	150	150	150	150	150
4.32	Ground clearance at centre of wheelbase, with load (forks lowered)	m2	(mm)	227	227	227	227	227
4.33	Working aisle width with 1000 x 1200 mm pallets, crosswise	Ast	(mm)	4357	4507	4542	4692	4742
4.34a	Working aisle width with 800 × 1200 mm pallets, crosswise	Ast	(mm)	4157	4307	4342	4492	4542
4.34b	Working aisle width with 800 x 1200 mm pallets, lengthwise	Ast	(mm)	4557	4707	4742	4892	4942
4.35	Turning circle radius	Wa	(mm)	2580	2730	2760	2890	2940
4.36	Minimum distance between centres of rotation	b13	(mm)	836	903	903	971	971
	Performance							
5.01	Travel speed, with / without load		km / h	21.5/22.5	21.5/22.5	21/22	21/22	20.5/22
5.02	Lifting speed, with / without load		m / s	0.62/0.67	0.62/0.67	0.54/0.58	0.53/0.57	0.53/0.57
5.03	Lowering speed, with / without load		m / s	0.50/0.50	0.50/0.50	0.50/0.50	0.50/0.50	0.50/0.50
5.05	Rated drawbar pull, with / without load		N	25800/18200	25500/19300	24900/20000	24800/21900	24500/22100
5.06	Maximum drawbar pull,with / without load (5 min short duty)		N	-/-	-/-	-/-	-/-	-/-
5.07	Gradeability, with / without load		%	27.3/26.7	24.6/26.5	21.8/25.4	21/26.4	19.3/25.3
5.08	Maximum gradeability with / without load		%	-/-	-/-	-/-	-/-	-/-
5.09	Acceleration time (10 metres) with / without load		s	-/-	-/-	-/-	-/-	-/-
5.10	Service brakes (mechanical / hydraulic / electric / pneumatic)			Hydraulic	Hydraulic	Hydraulic	Hydraulic	Hydraulic
	IC Engine							
7.01	Manufacturer / Type			D04EG-T	D04EG-T	D04EG-T	D04EG-T	D04EG-T
7.02	Rated output to ISO 1585 (Gross output)		kW	54.0	54.0	54.0	54.0	54.0
7.03	Rated speed to DIN 70 020		rpm	2250	2250	2250	2250	2250
7.04	Number of cylinders / cubic capacity		cm^3	4/3330	4/3330	4/3330	4/3330	4/3330
7.06	Max torque		Nm	260	260	260	260	260
7.07	Max torque at engine speed		rpm	1800	1800	1800	1800	1800
	Miscellaneous							
8.01	Type of drive control			Powershift 2/1	Powershift 2/1	Powershift 2/1	Powershift 2/1	Powershift 2/1
8.02	Maximum operating pressure for attachments		bar	191	191	191	191	191
8.03	Oil flow for attachments		l / min	80	80	80	80	80
8.04	Noise level, value at operator's ear (EN 12053)		dB (A)	78.5	78.5	78.5	78.5	78.5
8.05	Towing coupling, type DIN 15170			Pin	Pin	Pin	Pin	Pin

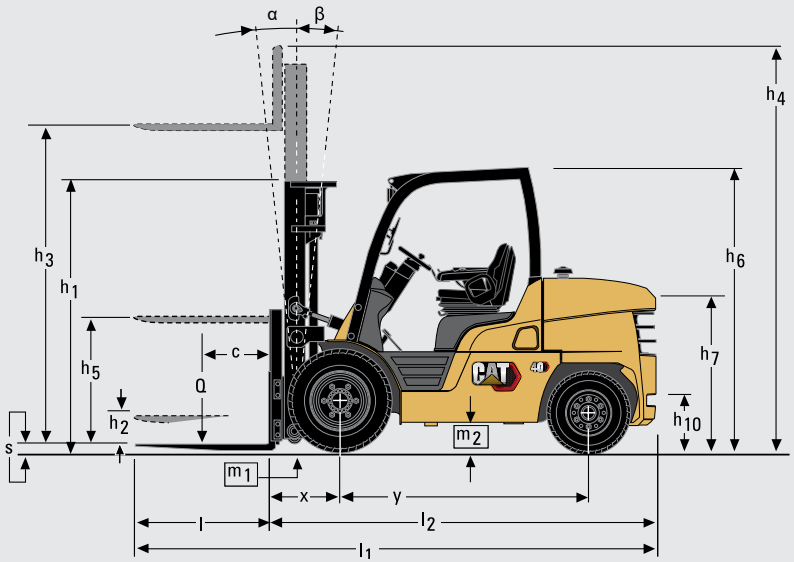

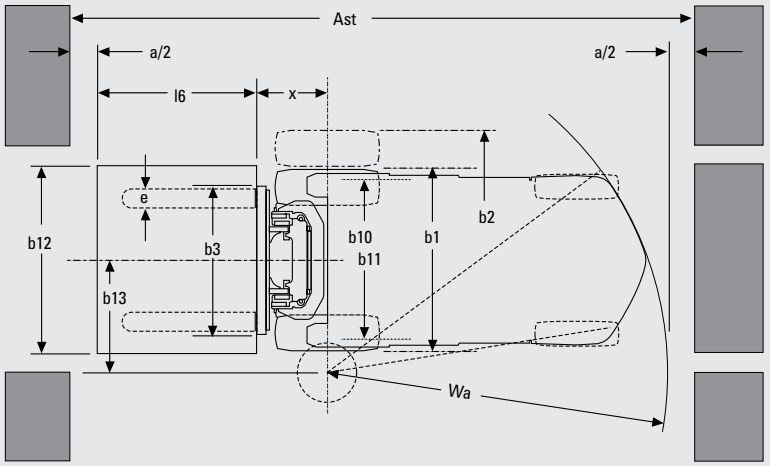

Ast = Wa + x + l6 + a
Ast = Working aisle width with load
a = Safety clearance (200 mm)
l6 = Pallet length (800 or 1000 mm)
b12 = Pallet width (1200 mm)

2023 Freightliner M2 106 Water Truck - 350HP











Recent Activity

Viewed	Shared	Saved
104 times	Not yet	Not yet

Product Specifications

Year	2023
Category	Water Trucks
Manufacturer	Freightliner
Model	M2 106
Condition	Used
Stock Number	15439
MLS Number	11939157
VIN	3ALHCYFE1PDNY1297
Usage	1,791 Hours
Usage	32,783 Miles

Weight & Dimensions

Weight Class	Class 8
Duty Class	Heavy Duty

Engine

Horse Power	350 HP
Engine Manufacturer	Cummins
Engine Type	L9
Engine Size	IN-LINE
Fuel Type	Diesel

Drivetrain

Drive Type	6x4
Gear Ratio	5.29

Body & Chassis

Suspension	AirLiner
Number of Rear Axles	Tandem Axle
Front Axle Weight	16000 lbs.
Rear Axle Weight	40000 lbs.
Wheel Base	205.0 in.

Interior & Controls

Drive Side Type	Left Hand Drive

Product Description

Aluminum wheels all around, Chrome front bumper, 5" chrome exhaust stack, Chrome mirrors, composite exterior sun visor, Dual chrome air horns, Dual cab mounted amber strobe lights, Five LED marker lights, 80 gallon aluminum fuel tank. Air-Ride driverâ€™s seat, Tilt & telescopic steering, Opal Gray interior, heater & air conditioning package gauge & instrument package c/w graphics display, AM/FM/WB audio system, 150 watt oil pan heater, 1000 watt coolant heater, 160 amp alternator, 2250 CCA batteries, Cummins integral engine brake, Fully locking rear differentials, 97 dba electric back up alarm, battery disconnect switch.
EngineType: L9
EngineMake: Cummins
NumSpeeds: Allison
PowerType: Diesel

Hydraulic System – Lift/Tilt

Lift/Tilt System – Circuit	Positive Flow Control	
Lift/Tilt System – Pump	Variable Piston	
Maximum Flow at 1,650 rpm	1180 L/min	311 gal/min
Relief Valve Setting – Lift/Tilt	29 500 kPa	4,200 psi
Cylinders – Lift/Tilt	Double-acting	
Lift Cylinder – Bore	267 mm	10.5 in
Lift Cylinder – Stroke	1682 mm	66.2 in
Tilt Cylinder – Bore	235 mm	9.3 in
Tilt Cylinder – Stroke	1040 mm	40.9 in

• High Lift configuration.

Hydraulic Cycle Time

Rackback	2.4 seconds
Raise	9.2 seconds
Dump	1.8 seconds
Lower	3.8 seconds
Lower Float Down	3.1 seconds
Total Hydraulic Cycle Time	17.2 seconds

• High Lift configuration, calculated speeds.

Hydraulic System – Steering

Steering System – Circuit	Closed	
Steering System – Pump	Piston, variable displacement	
Maximum Flow @ 1,985 rpm (6900 kPa/1,000 psi)	505 L/min	133 gal/min
Relief Valve Setting – Steering	34 500 kPa	5,000 psi
Total Steering Angle	86 degrees	

Complete System Fill

Fuel Tank	2045 L	540.2 gal
Cooling System	303.5 L	80.2 gal
Crankcase	120.0 L	31.7 gal
Transmission	170 L	44.9 gal
Differentials and Final Drives – Front	482.0 L	127.3 gal
Differentials and Final Drives – Rear	482.0 L	127.3 gal
Hydraulic System Factory Fill	873.0 L	230.0 gal
Hydraulic System (tank only)	553.0 L	146.0 gal

• High Lift configuration.

Cooling System

Ambient Capability Hydraulically Driven Demand Fan		
Standard	43° C	110° F
High	55° C	131° F

Axles

Front	Fixed
Rear	Trunnion
Oscillation Angle	10 degrees

Sound Performance

	Standard	Suppression
Operator Sound Level (ISO 6396:2008)	70 dB(A)	70 dB(A)
Machine Sound Level (ISO 6396:2008)	116 dB(A)	113 dB(A)

• The measurement was conducted at 70 percent of the maximum engine cooling fan speed. Hearing protection may be needed when the machine is operated with a cab that is not properly maintained or when the doors or windows are open for extended periods or in a noisy environment.

Specifications	IDH200QR	IDH400QR	IDH500QR
Maximum Heating Capacity	170,000 BTU/h	390,000 BTU/h	500,000 BTU/h
Heated Air Volume	1,610 CFM	2,800 CFM	4,800 CFM
Maximum Static Pressure	5.0"	2.8"	3.5"
Running Sound Level	< 74dB	< 62dB	< 68dB
Discharge Temperature	up to 230°F (110°C)	up to 290°F (143°C)	up to 250°F (121°C)
Insulated Jacket	No	Yes	Yes
Outlet Configuration	Single 12"	Dual 12" or Single 16"	Dual 12" or Single 16"
Inlet Diameter	12"	16"	16"
Maximum Total Duct Length	Up to 100ft	Up to 100ft per Outlet	Up to 100ft per Outlet
Environmental Spill Containment	No	Yes	Yes
Fuel Tank Capacity **(US Gal)**	18	Std. 42/Opt. 60/Opt. 119	Std. 42/Opt. 60/Opt. 119
Approx. Run Time	15 hrs	16.5 hrs/24 hrs/47 hrs	14 hrs/20 hrs/39hrs
Supply Gas Pressure **(LP/NG)**	1/2lb PSI max. or 7"-14" w.c.	1/2lb PSI max. or 7"-14" w.c.	1/2lb PSI max. or 7"-14" w.c.
Power Requirement	120V - 15amp	120V - 15amp	120V – 20amp
Running Amps	11.0	9.2	17.6
Crated Dimensions	64"L x 36"W x 42"H	83"L x 37"W x 52"H	83"L x 37"W x 52"H
Approximate Crated Weight	320lbs	580lbs	580lbs
Approvals/Certification	CSA	CSA	CSA/CSA



IDH400/500QR OIL /DIESEL

FROST Fighter

D



KS 355 Plastic pipe cutter

- For 160 - 355mm diameter pipe with wall thickness 8 - 40mm.
- Unique clamping mechanism. No additional belts, chains or reduction inserts needed.
- Supplied with transport box: Dimensions 700 x 350 x 500 mm; Weight 17.0 kg

d-d (mm)	Part No.	USD	Power
160 - 355	*** 790 202 001**	**4,608.29**	1750 W; 230 V; 50/60 Hz

D



KS 355 Saw blade Ø 180x30

Part No.	USD
*** 790 202 011**	**395.85**

D



KS 1600 Plastic pipe cutter

- The easy handling and an optimal safety do make the saw indispensable on each construction site
- Motor hand-circular saw with chain guiding
- The machine consists of a motorized hand saw, with guide carriage and tensioning chain for each pipe diameter
- The tensioning chain is to be out around the pipe and tightened by means of the chain tensioner. The carriage is applied with the hand circular saw. The pipe is cut by moving the carriage around the pipe.
- A quick, clean and right angled cut is the result

The KS 1600 is used for cutting plastic pipes fast, cleanly and properly right-angled from diameter 500 mm up to 1600 mm with a wall thickness of max. 60 mm. For each pipe diameter, the appropriate chain length is necessary. The saw is to be put on the tensioned chain as per user manual which serves as a guiding device for the saw over a full 360° turn. The guard plate covers the saw blade also during operation and provides full protection for the user at all times. The KS 1600 basic kit consists of a circular-hand saw, 230 V / 2200 W with carriage, 2 tension chains for d560 mm and d630 mm as well as a chain tensioner. The whole equipment comes in a convenient and robust transport box. The easy handling and the optimal safety features make this tool indispensable on every building site.

Scope of delivery:
1 Circular-hand saw, 1 tensioning chain d560 mm, 1 tensioning chain d630 mm, 1 chain tensioner, 1 hex-wrench size 5, 1 hex-wrench size 6, 1 operating instruction, transport box

Technical data:
Dimension range:d500 - 1600 mm
(In combination with the respective tensioning chain)
Plug: EU-Plug
Voltage:230 V AC
Power: 2200 Watt
Frequency:50-60 Hz
Circular saw blade outer-Ø: 240 mm
RPM: 4100
Sound level: 104 dB (A)
Weight saw: 15.5 kg
Weight KS 1600 Basic Kit: 43.5 kg
Dimensions saw (W x H x D): 790 x 330 x 335 mm
Dimensions Transport Box: 950 x 400 x 395 mm

d-d (mm)	Type	Part No.	USD
500 - 1600	KS 1600 Basic Kit	*** 790 109 600**	**6,673.58**

GENERAC®

8/10/13 kVA specifications

Generator

Model	G007047-1 (8 kVA)	G007048-1 (10 kVA)	G007049-1 (13 kVA)
Rated Maximum Continuous Power Capacity (LP)	8,000 VA*	10,000 VA*	13,000 VA*
Rated Maximum Continuous Power Capacity (NG)	7,000 VA*	10,000 VA*	13,000 VA*
Rated Voltage	220	220	220
Rated Maximum Continuous Load Current – 220 Volts (LP/NG)	36.4/31.8	45.5/45.5	59.1/59.1
Main Line Circuit Breaker	40 Amp	50 Amp	63 Amp
Phase	1	1	1
Number of Rotor Poles	2	2	2
Rated AC Frequency	50 Hz	50 Hz	50 Hz
Power Factor	1.0	1.0	1.0
Battery Requirement (not included)	12 Volts, Group 26R 540 CCA Minimum or Group 35AGM 650 CCA Minimum		
Unit Weight (lb/kg)	341/155	389/176	425/193
Dimensions (L x W x H) in/mm	48 x 25 x 29/1218 x 638 x 732		
Sound output in dB(A) at 23 ft (7 m) with generator operating at normal load**	62	64	64
Sound output in dB(A) at 23 ft (7 m) with generator exercising five minutes at low speed **	54	55	55

Engine

Type of Engine		GENERAC G-FORCE 500 SERIES	GENERAC G-FORCE 1000 SERIES	GENERAC G-FORCE 1000 SERIES
Number of Cylinders		2	2	2
Displacement		530 cc	999 cc	999 cc
Cylinder Block		Aluminum w/ Cast Iron Sleeve		
Valve Arrangement		Overhead Valve	Overhead Valve	Overhead Valve
Ignition System		Solid-state w/ Magneto	Solid-state w/ Magneto	Solid-state w/ Magneto
Governor System		Electronic	Electronic	Electronic
Compression Ratio		9.5:1	9.5:1	9.5:1
Starter		12 VDC	12 VDC	12 VDC
Oil Capacity Including Filter		1.7 qt/1.6 L	1.9 qt/1.8 L	1.9 qt/1.8 L
Operating rpm		3,000	3,000	3,000
Fuel Consumption				
Natural Gas	ft^3/hr (m^3/hr)			
	1/2 Load	93 (2.63)	126 (3.57)	150 (4.25)
	Full Load	153 (4.33)	204 (5.78)	231 (6.54)
Liquid Propane	ft^3/hr (gal/hr) [l/hr]			
	1/2 Load	35 (0.96) [3.62]	45 (1.24) [4.70]	51 (1.40) [5.29]
	Full Load	56 (1.55) [5.87]]	70 (1.91) [7.24]	80 (2.20) [8.32]

Note: **Fuel pipe must be sized for full load.** Required fuel pressure to generator fuel inlet at all load ranges - 3.5-7" water column (7-13 mm mercury) for natural gas, 10-12" water column (19-22 mm mercury) for LP gas.

Outputs are based upon values @ 1000 BTU per cubic feet with NG and 2500 BTU per cubic feet with LP
@ 37.26 Megajoules per cubic meter with NG and 93.15 Megajoules per cubic meter with LP

Controls

Two-Line Plain Text Multilingual LCD Display	Simple user interface for ease of operation.
Mode Buttons:Auto	Automatic Start on Utility failure. Programmable exercise.
Manual	Start with starter control, unit stays on. If utility fails, transfer to load takes place.
Off	Stops unit. Power is removed. Control and charger still operate.
Ready to Run/Maintenance Messages	Standard
Engine Run Hours Indication	Standard
Programmable start delay between 2-1500 seconds	Standard (programmable by dealer only)
Utility Voltage Loss/Return to Utility Adjustable (Brownout Setting)	From 140-156 V/175-198 V
Future Set Capable Exerciser/Exercise Set Error Warning	Standard
Run/Alarm/Maintenance Logs	50 Events Each
Engine Start Sequence	Cyclic cranking: 16 sec on, 7 rest (90 sec maximum duration).
Starter Lock-out	Starter cannot re-engage until 5 sec after engine has stopped.
Smart Battery Charger	Standard
Charger Fault/Missing AC Warning	Standard
Low Battery/Battery Problem Protection and Battery Condition Indication	Standard
Automatic Voltage Regulation with Over and Under Voltage Protection	Standard
Under-Frequency/Overload/Stepper Overcurrent Protection	Standard
Safety Fused/Fuse Problem Protection	Standard
Automatic Low Oil Pressure/High Oil Temperature Shutdown	Standard
Overcrank/Overspeed (@ 72 Hz)/rpm Sense Loss Shutdown	Standard
High Engine Temperature Shutdown	Standard
Internal Fault/Incorrect Wiring Protection	Standard
Common External Fault Capability	Standard
Field Upgradable Firmware	Standard

**Sound levels are taken from the front of the generator. Sound levels taken from other sides of the generator may be higher depending on installation parameters. Rating definitions - Standby: Applicable for supplying emergency power for the duration of the utility power outage. No overload capability is available for this rating. (All ratings in accordance with BS5514, ISO3046 and DIN6271). * Maximum kilovolt amps and current are subject to and limited by such factors as fuel Btu/megajoule content, ambient temperature, altitude, engine power and condition, etc. Maximum power decreases about 3.5 percent for each 1,000 feet (304.8 meters) above sea level; and also will decrease about 1 percent for each 6 °C (10 °F) above 16 °C (60 °F).

MDG75DF4 | 4.5L | 75 kVA

MOBILE DIESEL GENERATOR SET

EPA Emissions Certification: Final Tier 4

STANDARD FEATURES

ENGINE SYSTEM

- John Deere 4045hfg04_b
- Prime - 97hp, 73kWM @ 1800 rpm
- Standby - 107hp, 80kWH @ 1800 rpm
- 4 cylinder, 4.5 displacement, EPA Final Tier 4

FUEL SYSTEM

- Fuel tank - 165 gallon (625L)
- DEF - 11 gallon (9 usable)
- DEF consumption - 0.26 gph
- 26 hour run time - 6.14 gph consumption

COOLING SYSTEM

- Capable of handling 107°F
- Low coolant shutdown
- Radiator and oil drains plumbed to exterior

SYSTEM OUTPUTS

- 68 kW / 85 kVA – standby-three phase
- 60 kW / 75 kVA – prime-three phase

GENERATOR

- 60 Hz engine/generator
- Marathon Electric
  - Brushless
  - 4-pole
  - Class H insulation
- Voltage regulation ± 1.0% with PM600 Voltage Regulator

ENCLOSURE

- Aluminum, sound attenuated enclosure
  - UV and fade resistant, high temperature cured, white polyester powder paint
  - Insulated and baffled
  - 74 dB(A) at 23 ft (7 m) – prime power
- Fully lockable enclosure including doors and fuel fill and DEF fill
- Emergency stop switch located on outside of enclosure
- Central lifting point
- Multi-lingual operating/safety decals
- Document holder with operating manual including AC/DC wiring diagrams

TRAILER

- DOT approved tail, side, brake, and directional lights; recessed rear lights
- Transportation tie downs
- Safety chains with spring loaded safety hooks
- 3 in (76.2 mm) Lunette ring hitch

WARRANTY

- 2 year limited or 2000 hours
  - Unlimited hours covered in first year

CERTIFICATIONS

- CSA certified

SYSTEM CONTROLS

Power Zone® Controller And Display

- Backlit, 800 x 480 pixel resolution color display
- -40 °F to 185 °F (-40 °C to 85 °C) operating temperature range
- Automatic coarse voltage adjustment
- Integrated fine voltage adjustment
- PLC functionality

Push Buttons For Easy Operation

- Manual or Auto Start
- Engine Start
- Engine Stop/Reset
- Alarm Mute
- Operator Screens
  - Home
  - Engine
  - Generator
  - Voltage Adjust

Scrolling Arrows for Diagnostic Information

- Engine diagnostic display
  - Oil pressure
  - Engine temperature
  - Fuel level
  - Battery
  - After-treatment inlet/outlet temperature
  - Ash/soot levels
- Generator diagnostic display
  - System kW output display
  - Line output and frequency display
- Alarms
  - Warning
  - Shutdown
  - Electrical Trip
  - Engine
- Alarm list – warnings/shutdowns; 250 event history log – date/time stamp
  - Fuel level: warning – 15%; shutdown – 5%
  - Over speed protection: shutdown – 115%
  - Oil pressure: warning – 25 psi; shutdown – 20 psi
  - Coolant temperature: warning – 230 °F (110 °C); shutdown – 235 °F (113 °C)
  - Battery voltage: over – 15VDC; under – 11VDC
  - Generator over voltage: warning – 110%; electrical trip – 125%
  - Generator under voltage: warning – 91.4%; shutdown – 70%
  - Generator over frequency: warning – 102.5%; electrical trip – 110%
  - Generator under frequency: warning – 95%; electrical trip – 90%
- Inputs/Outputs
- Auto Schedule
- Status
- Configuration of controller, firmware, and connections

ELECTRICAL CONTROLS

- Remote start/stop contacts located in receptacle box
- Lockable control box door with diagnostics window
- Lockable lug box with safety switch
  - Trips main breaker when door is opened
  - Disables voltage regulator
- Output ground connection lug inside lug box
- 300A main breaker with shunt trip
- Convenience receptacles with individual breakers (restricted use in high wye mode)
  - Two 120V 20 amp GFCI duplex outlets – (NEMA 5-20R type)
  - Three 125/250V 50 amp, 3-pole, 4-wire Twist-lock (Non-NEMA 6369)
- One 12V / 720 CCA wet cell battery

FREE FIELD MECHANICAL & EXHAUST NOISE

MECHANICAL: Sound Power (1/3 Octave Frequencies)

Percent Load	Engine Power	Overall	100 Hz	125 Hz	160 Hz	200 Hz	250 Hz	315 Hz	400 Hz	500 Hz	630 Hz	800 Hz
%	bhp	dB(A)	dB(A)	dB(A)	dB(A)	dB(A)	dB(A)	dB(A)	dB(A)	dB(A)	dB(A)	dB(A)
1380	100	116.2	79.2	77.2	80.1	80.6	89.3	88.1	92.5	95.7	95.8	98.7
1035	75	115.4	78.0	76.9	79.1	79.6	88.1	86.9	92.4	95.4	95.9	99.5
690	50	113.2	74.7	74.2	76.5	77.5	86.0	84.6	90.3	94.7	94.8	98.2

MECHANICAL: Sound Power (1/3 Octave Frequencies)

Percent Load	Engine Power	1 kHz	1.25 kHz	1.6 kHz	2 kHz	2.5 kHz	3.15 kHz	4 kHz	5 kHz	6.3 kHz	8 kHz	10 kHz
%	bhp	dB(A)	dB(A)	dB(A)	dB(A)	dB(A)	dB(A)	dB(A)	dB(A)	dB(A)	dB(A)	dB(A)
1380	100	101.7	102.2	98.7	100.7	101.8	96.8	96.6	96.6	94.1	105.6	115.2
1035	75	102.6	103.3	100.4	103.0	104.5	101.0	104.8	104.3	106.2	109.2	103.9
690	50	101.2	103.5	99.0	102.1	102.8	100.9	104.0	103.4	103.8	102.4	102.1

EXHAUST: Sound Power (1/3 Octave Frequencies)

Percent Load	Engine Power	Overall	100 Hz	125 Hz	160 Hz	200 Hz	250 Hz	315 Hz	400 Hz	500 Hz	630 Hz	800 Hz
%	bhp	dB(A)	dB(A)	dB(A)	dB(A)	dB(A)	dB(A)	dB(A)	dB(A)	dB(A)	dB(A)	dB(A)
1380	100	130.0	101.4	99.0	106.2	105.5	100.7	97.7	98.5	101.7	108.5	113.2
1035	75	120.5	100.2	99.1	103.8	101.6	97.4	95.2	95.3	98.7	104.5	110.1
690	50	117.8	99.3	96.7	101.7	97.8	95.1	92.6	94.9	98.2	103.3	107.4

EXHAUST: Sound Power (1/3 Octave Frequencies)

Percent Load	Engine Power	1 kHz	1.25 kHz	1.6 kHz	2 kHz	2.5 kHz	3.15 kHz	4 kHz	5 kHz	6.3 kHz	8 kHz	10 kHz
%	bhp	dB(A)	dB(A)	dB(A)	dB(A)	dB(A)	dB(A)	dB(A)	dB(A)	dB(A)	dB(A)	dB(A)
1380	100	113.0	112.0	114.7	119.7	122.4	120.3	121.2	122.5	120.8	118.8	116.9
1035	75	111.0	103.2	105.3	106.1	107.2	109.1	111.0	110.9	111.2	110.5	107.4
690	50	101.5	101.4	102.7	102.4	105.4	107.5	108.7	108.6	108.2	107.8	107.3

SOUND PARAMETER DEFINITION:
Sound Power Level Data - DM8702-03

Sound power is defined as the total sound energy emanating from a source irrespective of direction or distance. Sound power level data is presented under two index headings:
Sound power level -- Mechanical
Sound power level -- Exhaust

Mechanical: Sound power level data is calculated in accordance with ISO 3747. The data is recorded with the exhaust sound source isolated.

Exhaust: Sound power level data is calculated in accordance with ISO 6798 Annex A. Exhaust data is post-catalyst on gas engine ratings labeled as "Integrated Catalyst".

Measurements made in accordance with ISO 3747 and ISO 6798 for mechanical and exhaust sound level only. Frequency bands outside the displayed ranges are not measured, due to physical test, and environmental conditions that affect the accuracy of the measurement. No cooling system noise is included unless specifically indicated. Sound level data is indicative of noise levels recorded on one engine sample in a survey grade 3 environment.

How an engine is packaged, installed and the site acoustical environment will affect the site specific sound levels. For site specific sound level guarantees, sound data collection needs to be done on-site or under similar conditions.

Cat® 3516B
Diesel Generator Sets

CAT



Bore – mm (in)	170 (6.69)
Stroke – mm (in)	190 (7.48)
Displacement – L (in³)	69.0 (4211)
Compression Ratio	14.0:1
Aspiration	TA
Fuel System	EUI
Governor Type	ADEM™ A3

Image shown may not reflect actual configuration

Standby 60 Hz ekW (kVA)	Mission Critical 60 Hz ekW (kVA)	Emissions Performance
2250 (2812)	2250 (2812)	Optimized for Low Fuel Consumption

Features

Cat® Diesel Engine
- Designed and optimized for low fuel consumption
- Reliable performance proven in thousands of applications worldwide
- Certified alternative fuels including Hydrotreated Vegetable Oil (HVO), Renewable Diesel (RD) and Hydrotreated Renewable Diesel (HRD) which meet EN 15940 or ASTM D975 can be used or blended with EN 590 diesel.

Generator Set Package
- Accepts 100% block load in one step
- Meets NFPA 110 loading requirements
- Conforms to ISO 8528-5 G3 load acceptance requirements
- Reliability verified through torsional vibration, fuel consumption, oil consumption, transient performance, and endurance testing

Cat Energy Control System (ECS)
- User-friendly interface and navigation
- Scalable system to meet a wide range of installation requirements
- Expansion modules and site specific programming for specific customer requirements
- Graphical touchscreen display
- Easily upgradeable

Warranty
- 24 months/1000-hour warranty for standby and mission critical ratings
- Extended service protection is available to provide extended coverage options

Worldwide Product Support
- Cat dealers have over 1,800 dealer branch stores operating in 200 countries
- Your local Cat dealer provides extensive post-sale support, including maintenance and repair agreements

INTERMEDIATE MODELS

GH-70I



MACHINE PARAMETERS

- Lifting capacity: 70 tonnes.
- Lifting speed (with load): 2 m/min.
- Lifting speed (without load): 2 m/min.
- Transfer speed: 0-40 m/min.
- Maximum gradient with load: 2%.
- Diesel engine: 110 / 1800 rpm.

This site uses own and external cookies to offer a better user experience. If you agree or continue to browse you accept their use. For more information please see our cookies policy.

Cookies policy

I AGREE

Features



SOUNDPROOFED PROPULSION UNIT

Suitable for obtaining a 94 dB(A) LWA (sound power level) equal to an average sound pressure level of 66 dB(A) at 10 m, in accordance with Directive 2000/15/EC. Foreseen for outdoor operations.



TRANSFER TROLLEY WITH TOTAL WEIGHT LOAD LIMITER.



STAINLESS STEEL HYDRAULIC PIPE

Stainless steel precision pipe, in accordance with the DIN-3291 standard.

Approximate Weights – Dual Slope

Empty vehicle	64 670 kg	142,573 lb
Chassis	46 600 kg	107,144 lb
Body	16 070 kg	35,428 lb

Service Refill Capacities

Fuel Tank	1137 L	300 gal
Cooling System	268 L	71 gal
Crankcase	91 L	24 gal
Differentials and Final Drives	306 L	81 gal
Steering Tank	40 L	11 gal
Torque Converter/Brake/ Hoist Hydraulic Tank	250 L	66 gal
Torque Converter/ Transmission Tank	95 L	25 gal

Tires

Standard Tire	27.00-R49 (E4) Tire

- Productive capabilities of the 777D truck are such that, under certain job conditions, TKPH (TMPH) capabilities of standard or optional tires could be exceeded and, therefore, limit production.
- Caterpillar recommends the customer evaluate all job conditions and consult the tire manufacturer for proper tire selection.

ROPS

ROPS/FOPS Standards	SAE J1040 MAY94, ISO 3471:1997

- ROPS (Rollover Protective Structure) for cab offered by Caterpillar meets SAE J1040 MAY94 and ISO 3471:1997 Level II ROPS criteria.

Sound

Sound Standards	ANSI/SAE J1166 MAY90, SAE J88 JUN96

- The operator sound exposure Leq (equivalent sound pressure level) measured according to work cycle procedures specified in ANSI/SAE J1166 MAY90 is 78 dB(A) for cab offered by Caterpillar, when properly installed and maintained and tested with doors and windows closed.
- The exterior sound pressure level for the standard machine measured at a distance of 15 m (49 ft) according to the test procedures specified in SAE J88 JUN86, mid-gear moving operation is 90 dB(A).
- Hearing protection may be needed when operating with an open operator station and cab (when not properly maintained or doors/windows open) for extended periods or in a noisy environment.

Steering

Steering Standards	SAE J1511 OCT90, ISO 5010:1992 (E)

- Turning diameter on front wheel track with standard tires: 25.3 m (83 ft).
- Machine clearance turning circle: 28.4 m (93 ft 2 in).
- Steering angle, left or right: 30.5 degrees.
- Separate hydraulic system prevents cross contamination.

785D Mining Truck Specifications

Service Refill Capacities

Fuel Tank	1893 L	500 gal
Cooling System	379 L	100 gal
Crankcase	204 L	54 gal
Differentials and Final Drives	436 L	115 gal
Steering Tank	90 L	24 gal
Steering System (Includes Tank)	117 L	31 gal
Brake/Hoist Hydraulic Tank	337 L	89 gal
Brake/Hoist System (Includes Tank)	641 L	169 gal
Torque Converter/ Transmission System (Includes Sump)	248 L	65.51 gal

Cab

Air Conditioning	6.9 kW	23,543 BTU/hr
Heater / Defroster	10.1 kW	34,462 BTU/hr

ROPS (Rollover Protective Structure) meets ISO 3471:2008 and ISO 13459:2012

FOPS (Falling Object Protective Structure) meets ISO 3449:2005 Level II and ISO 13459:2012 Level 11

Sound

- The dynamic operator sound pressure levels are measured according to work cycle procedures specified in ISO 6396:2008 is 80 dB(A).
- The dynamic exterior sound power level for the standard machine is tested using ISO 6395:2008 procedures is 121 dB(A).
- Hearing protection may be needed when operating with an open operator station and cab (when not properly maintained or doors/windows open) for extended periods or in a noisy environment.

Steering

Steering Angle	24°	
Turning diameter, (ISO 7457:1997)	29.8 m	97 ft 9 in
Steering Standard	ISO 5010:2007	

Tires

Standard Tire	33.00-R51 (E3 & E4)

- Productive capabilities of the 785D truck are such that, under certain job conditions, TKPH (TMPH) capabilities of standard or optional tires could be exceeded and, therefore, limit production.
- Caterpillar recommends the customer evaluate all job conditions and consult the tire manufacturer for proper tire selection.

Gradeability/Speed/Rimpull

To determine gradeability performance: Read from gross weight down to the percent of total resistance. Total resistance equals actual percent grade plus 1% for each 10 kg/t (20 lb/ton) of rolling resistance. From this weight-resistance point, read horizontally to the curve with the highest obtainable gear, then down to maximum speed. Usable rimpull will depend upon traction available and weight on drive wheels.

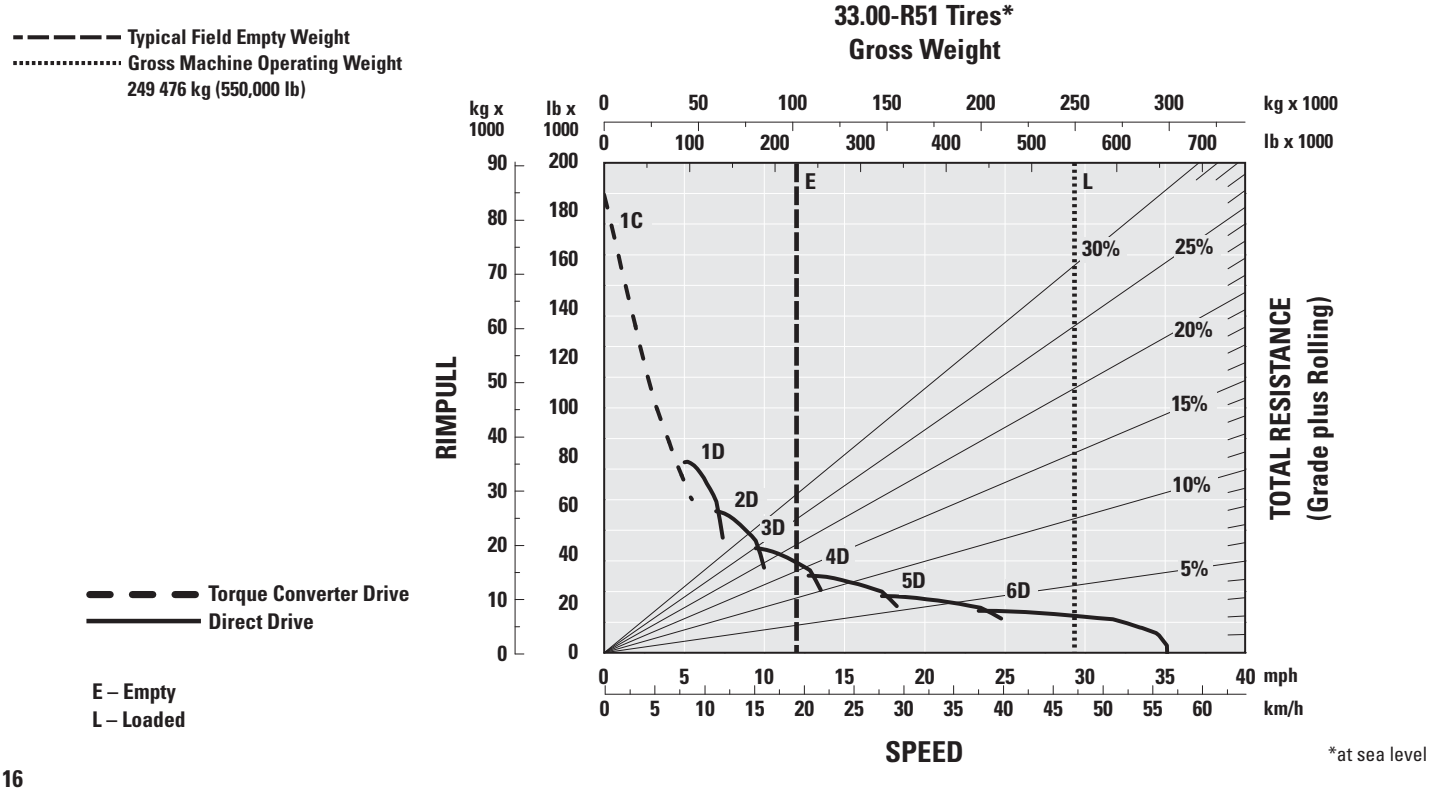

*at sea level

10.3 Sound Measurements

Products are tested for sound pressure level in accordance with ISO 3744 for the sound power level (L_{WA}) and ISO 11204 for the sound pressure level (L_{PA}) at the operator's location. The required sound specifications, per Annex VIII, European Directive 2006/42/EC of the EC Machine Regulations, are:

Machine	Sound Pressure at Operator's Location dB(A)	Guaranteed Sound Power dB(A)
CRT 48-35L-PS	91.1	110.2
CRT 48-37V-PS	94.8	110.3
CRT 48-57K-PS	94.3	111.7

10.4 Vibration Measurements

Products are tested for hand/arm vibration (HAV) level and whole body vibration in accordance with ISO 5349, EN 1033, and ISO 2631 where applicable.

Machine	HAV m/sec^2	Whole body m/sec^2
CRT 48-35L-PS	2.14	0.9
CRT 48-37V-PS	2.20	0.5
CRT 48-57K-PS	3.00	0.4

Vibration uncertainties

Hand-transmitted vibration was measured per ISO 5349-1. This measurement includes an uncertainty of 1.5 m/s^2.

Whole body vibration was measured per ISO 2631-1. This measurement includes an uncertainty of 0.3 m/s^2.

AX VIBRATORS	AX 90	AX 65	AX 56 – 10 M	AX 56 – 8 M	AX 56 – 5 M	AX 48 – 10 M	AX 48 – 8 M	AX 48 – 5 M	AX 40	AX 36
Tube diameter, mm	90	65	56	56	56	48	48	48	40	38
Frequency, vpm	6000	12000	12000	12000	12000	12000	12000	12000	12000	12000
Voltage, V (3-phase)	42	42	42	42	42	42	42	42	42	42
Frequency, Hz	200	200	200	200	200	200	200	200	200	200
Amperage, A	21	19	11.7	11.7	11.7	10	10	10	4.5	6.2
Hose length, m	3	5	10	8	5	10	8	5	5	5
Cable length, m	10	10	10	10	10	10	10	10	10	10
Total weight, kg	26.6	18.8	20.5	18.5	16.1	17.4	15.4	15.1	13.2	13.1
Sound power, LW dB(A)	76	79	79	79	79	76	76	76	78	70
Vibration value, m/s²	5.06	4.62	3.66	3.66	3.66	3.53	3.53	3.53	3.81	3.81
PART NUMBERS										
	967 94 00–01	967 85 83–01	967 85 82–03	967 85 82–02	967 85 82–01	967 85 81–03	967 85 81–02	967 85 81–01	967 85 80–01	967 85 79–01

VIBRASTAR	60	50	40
Tube diameter, mm	60	50	40
Frequency, vpm	12000	12000	12000
Voltage, V (3-phase)	42	42	42
Frequency, Hz	200	200	200
Amperage, A	11	8	4
Hose length, m	5	5	5
Cable length, m	10	10	10
Total weight, kg	15	13	8.4
Sound power, LW dB(A)	84	76	75
Vibration value, m/s²	3.23	3.28	1.8
PART NUMBERS			
	967 93 81–03	967 93 81–02	967 93 81–01

FREQUENCY CONVERTERS	CF 67T	CF 25	CF 11
Output power, kVA	4.7	1.8	0.8
Intensity at 42 V, A	67	25	11
Number of phases (primary voltage)	3	1 or 3	1
Number of outlets	4	2	1
Weight, kg	70	31	18
Protection index	IP55	IP55	IP55
Noise level, dB(A)	85	80	76
Transport wheels	standard	optional	–
PART NUMBERS			
230 V–1–50 Hz	–	967 93 87–01	967 93 79–01
400 V–3–50 Hz	967 93 82–01	967 91 34–02	–
400 V–3–50 Hz CI4P*	967 93 82–02	–	–
380 V–3–60 Hz CI4P*	967 93 82–03	–	–
Transport trolley	–	596 40 08–01	–

* CI4P = Four outlets with motor breakers that protect the external vibrators against high ampere consumption.

GENERATORS	CFG 67	CFD 67	CFG 25
Engine type, 4-stroke & manual start	Honda GX 270	Lombardini 15 LD 350	Honda GX 160
Fuel	Petrol	Diesel	Petrol
Max power at 3600 rpm, hp	8.4	7.5	4.8
Rated speed, rpm	3000	3000	3000
Output rated power, kVA	4.7	4.6	1.8
Number of outlets	4	4	2
Rated amperage, A	67	65	25
Rated output voltage, V	42	42	42
Frequency, Hz	200	200	200
Weight, kg	85	95	45
Noise level (LW), dB(A)	97	108	94
Wheels	yes	yes	optional
PART NUMBERS			
	967 92 84–01	967 92 85–01	967 92 82–01
Transport wheels	–	–	967 85 99–01

HEATER SPECIFICATIONS

Model	K150-FAI	K275-FAI
Heating power (BTU/hr)	150,000	275,000
Air delivery (cfm)	1,207	1,765
Oil consumption (lb/hr)	7.5 (1.05 gal/hr)	14.0 (1.97 gal/hr)
Sound pressure level (dB(A))	70	71
Voltage	115 V 60 Hz 1ph AC	115 V 60 Hz 1ph AC
Motor power (HP)	0.32	0.50
Current intake (A)	2.4	2.7
Weight (lb)	165	232
Length (in)	49	62
Width (in)	23	26
Height (in)	41	47
Stack diameter (in)	5.51	5.51
Tank capacity (gal)	13.5	21.0
Pump pressure	9.5 bar/138psi	12 bar/175 psi
Fuse	15A	15A
Fuel types	Kerosene	kerosene
	#1 Diesel	#1 Diesel
	#2 Diesel	#2 Diesel
	#1 Fuel Oil	#1 Fuel Oil

⚠ WARNINGS

YOUR SAFETY IS IMPORTANT TO YOU AND TO OTHERS, SO PLEASE READ THESE INSTRUCTIONS BEFORE YOU OPERATE THIS HEATER.

⚠ GENERAL HAZARD WARNING:

FAILURE TO COMPLY WITH THE PRECAUTIONS AND INSTRUCTIONS PROVIDED WITH THIS HEATER, CAN RESULT IN DEATH, SERIOUS BODILY INJURY AND PROPERTY LOSS OR DAMAGE FROM HAZARDS OF FIRE, EXPLOSION, BURN, ASPHYXIATION, CARBON MONOXIDE POISONING, AND/OR ELECTRICAL SHOCK.

ONLY PERSONS WHO CAN UNDERSTAND AND FOLLOW THE INSTRUCTIONS SHOULD USE OR SERVICE THIS HEATER.

IF YOU NEED ASSISTANCE OR HEATER INFORMATION SUCH AS AN INSTRUCTIONS MANUAL, LABELS, ETC. CONTACT THE MANUFACTURER.

⚠ WARNING: NOT FOR HOME OR RECREATIONAL VEHICLE USE

⚠ WARNING: FIRE, BURN, INHALATION, AND EXPLOSION HAZARD. KEEP SOLID COMBUSTIBLES, SUCH AS BUILDING MATERIALS, PAPER OR CARDBOARD, A SAFE DISTANCE AWAY FROM THE HEATER AS RECOMMENDED BY THE INSTRUCTIONS NEVER USE THE HEATER IN SPACES WHICH DO OR MAY CONTAIN VOLATILE OR AIRBORNE COMBUSTIBLES, OR PRODUCTS SUCH AS GASOLINE, SOLVENTS, PAINT THINNER, DUST PARTICLES OR UNKNOWN CHEMICALS.

Scheu Products Company, Incorporated
Mail: P.O. Box 250, Upland, CA 91785
Plant: 8855 Baker Ave., Rancho Cucamonga, CA 91730
Telephone: 800-325-7057
www.scheuco.com
customerservice@scheuco.com

8338B

ENGINE

Model ..... Komatsu SAA4D107E-2
Common rail direct injection, water-cooled, emissionised, turbocharged, after-cooled diesel
Engine power
at rated engine speed ..... 2.000 rpm
ISO 14396 ..... 95,2 kW / 128 HP
ISO 9249 (net engine power) ..... 94,0 kW / 126 HP
Max. torque / engine speed ..... 586 Nm / 1.400 rpm
No. of cylinders 4
Bore × stroke ..... 107 × 124 mm
Displacement ..... 4,46 ltr
Lubricating system ..... Gear pump, pressure feed lubrication
Filter ..... Main-flow filter
Electrical system ..... 24 V
Battery ..... 2 × 110 Ah
Alternator ..... 60 A
Air-filter type ..... Dry-air filter with automatic dust emission and preliminary purification including a dust display

TRANSMISSION

Drive system ..... Electronically controlled hydrostatic transmission, switchable in all directions under full power. Fixed ratio gearbox. Variable speed limiter
Hydrostatic pump ..... 1 variable piston pump
Hydrostatic motor ..... 2 variable piston motors
Speed ranges (forwards/backwards) 4/4
Max. travel speeds (forwards/backwards) (Tyres 20.5 R25)
1. speed range ..... 5 - 14 km/h
2. speed range ..... 14 km/h
3. speed range ..... 23 km/h
4. speed range ..... 38 km/h

CHASSIS AND TYRES

System ..... 4-wheel drive
Front axle ..... HD axle, semi-floating, fixed type, TPD-differential, (LSD-differential optional)
Rear axle ..... HD axle, semi-floating, centre-pin support, 24° swing angle, TPD-differential, (LSD-differential optional)
Reduction gear ..... Spiral bevel gear
Differential ..... Straight bevel gear pair
Final drive ..... Planetary gear in an oil bath
Tyres ..... 20.5 R25 (standard)

SERVICE REFILL CAPACITIES

Cooling system ..... 24,6 ltr
Fuel tank ..... 177 ltr
Engine oil ..... 15,5 ltr
Hydraulic system ..... 58,0 ltr
Axle front ..... 18,5 ltr
Axle rear ..... 18,0 ltr
Transfer ..... 5,0 ltr

BRAKES

Operating brakes ..... Completely hydraulic dual-circuit system, running in oil bath, multi-disc brakes on all wheels, service-free
Parking brake ..... Operated mechanically, running in oil bath, multi-disc brake, service-free
Emergency brake ..... Uses the parking brake

HYDRAULIC SYSTEM

Hydraulic pump ..... Gear pump
Working pressure (max) ..... 206 bar
Circulating capacity of the hydraulic pump ..... 85 + 54 ltr/min
No. of boom/bucket cylinders 2/1
Type ..... Double-action
Bore diameter × stroke
Boom cylinder ..... 125 × 674 mm
Bucket cylinder ..... 150 × 504 mm
Hydraulic control lever ..... Servo-controlled, single lever
Hydraulic cycle with rated load bucket filling
Raise time ..... 5,7 s
Lowering time (empty) ..... 3,2 s
Dumping time ..... 1,9 s

STEERING SYSTEM

System ..... Articulated frame steering
Type ..... Completely hydraulic power steering
Steering angle to either side ..... 40°
Steering pump ..... Gear pump
Working pressure ..... 206 bar
Pumping capacity ..... 85,0 ltr/min
No. of steering cylinders 2
Type ..... Double-action
Bore diameter × stroke ..... 70 × 453 mm
Smallest turn (outer edge of the tyre 20.5 R25) ..... 5.150 mm

CABIN

Two-door SpaceCab™ in conformity with ISO 3471 with ROPS (roll over protective structure) in conformity with SAE J1040c and FOPS (falling object protective structure) in conformity with ISO 3449. The air-conditioned pressurised cabin is mounted upon hydrobearings and is noise dampened.

ENVIRONMENT

Engine emissions ..... Fully complies with EU Stage IIIB exhaust emission regulations
Noise levels
LwA external ..... 104 dB(A) (2000/14/EC Stage II)
LpA operator ear ..... 72 dB(A) (ISO 6396 dynamic test)
Vibration levels (EN 12096:1997)
Hand/arm ..... ≤ 2,5 m/s² (uncertainty K = 0,45 m/s²)
Body ..... ≤ 0,5 m/s² (uncertainty K = 0,26 m/s²)
Contains fluorinated greenhouse gas HFC-134a (GWP 1430).
Quantity of gas 0,9 kg, CO_2 equivalent 1,29 t.

Engine Installation Criteria

Air Intake System

Engine Air Flow	9.3	m^3/min	328	$ft.^3$/min
Air Mass Flow	645	kg/hr	1422	lb/hr
Maximum Allowable Temperature Rise, Ambient Air to Engine Inlet	8	Δ°C	15	Δ°F
Max. Air Intake Restriction, Clean Air Cleaner	3.75	kPa	15.0	in. H_2O
Max. Air Intake Restriction, Dirty Air Cleaner	6.25	kPa	25.0	in. H_2O
Air Cleaner Efficiency			99.9	%

Performance Data

Rated Power, Prime	183	HP	137	kW
Rated Power, Standby	201	HP	150	kW
Rated Speed			1800	rpm
Low Idle Speed			NA	
Rated Torque, Prime	724	N·m	534	lb-ft
Rated Torque, Standby	796	N·m	587	lb-ft
BMEP, Prime	1482	kPa	215	psi
BMEP, Standby	1489	kPa	216	psi
Altitude Capability	3048	m	10000	ft
Friction Power @Rated Speed	21	kW	28	HP
Air:Fuel Ratio, Prime			21.2 : 1	
Air:Fuel Ratio, Standby			20.2 : 1	
Noise @1 m Prime			90.9	dB(A)
Noise @1 m Standby			90.8	dB(A)
0-100% Standby Load Acceptance			3.8	sec
Load Acceptance, ISO 8528-5			G3	

Fuel Consumption	Prime		Standby	
	lb/hr	kg/h	lb/hr	kg/h
25 % Power	21.4	9.7	22.7	10.3
50 % Power	34.8	15.8	37.7	17.1
75 % Power	48.9	22.2	53.4	24.2
100 % Power	63.7	28.9	69.7	31.6

Performance Curve: 6068HFG94_Q

https://www.mississaugahardware.com/product/lt6005-11-rammer

Sound and noise
Sound power level, guaranteed (LWA)
106 dB(A)

Sound pressure level at operators ear
92 dB(A)



Husqvarna

LT6005 11" Jumping Jack Rammer

ENGINE

Model ..... Komatsu SAA6D114E-5
Type ..... Common rail direct injection, water-cooled, emissionised, turbocharged, after-cooled diesel
Engine power
at rated engine speed ..... 1.950 rpm
ISO 14396 ..... 202 kW/271 HP
ISO 9249 (net engine power) ..... 192 kW/257 HP
No. of cylinders 6
Bore × stroke ..... 114 × 144,5 mm
Displacement ..... 8,85 ltr
Battery ..... 2 × 12 V/155 Ah
Alternator ..... 24 V/60 A
Starter motor ..... 24 V/11 kW
Air filter type ..... Double element type with monitor panel dust indicator and auto dust evacuator
Cooling ..... Suction type cooling fan with radiator fly screen

HYDRAULIC SYSTEM

Type ..... HydrauMind. Closed-centre system with load sensing and pressure compensation valves
Additional circuits ..... 2 additional circuits with proportional control can be installed
Main pump ..... 2 variable displacement piston pumps supplying boom, arm, bucket, swing and travel circuits
Maximum pump flow ..... 2 × 267,5 ltr/min
Relief valve settings
Implement ..... 380 kg/cm²
Travel ..... 380 kg/cm²
Swing ..... 295 kg/cm²
Pilot circuit ..... 33 kg/cm²

UNDERCARRIAGE

Construction ..... X-frame centre section with box section track frames
Track assembly
Type ..... Fully sealed
Shoes (each side) 48
Tension ..... Combined spring and hydraulic unit
Rollers
Track rollers (each side) 8
Carrier rollers (each side) 2

SWING SYSTEM

Type ..... Axial piston motor driving through planetary double reduction gearbox
Swing lock ..... Electrically actuated wet multi-disc brake integrated into swing motor
Swing speed ..... 0 - 9,5 rpm
Swing torque ..... 102,9 kNm

DRIVES AND BRAKES

Steering control ..... 2 levers with pedals giving full independent control of each track
Drive method ..... Hydrostatic
Travel operation ..... Automatic 3-speed selection
Gradeability ..... 70%, 35°
Max. travel speeds
Lo / Mi / Hi ..... 3,2 / 4,5 / 5,5 km/h
Maximum drawbar pull ..... 29.570 kg
Brake system ..... Hydraulically operated discs in each travel motor

SERVICE REFILL CAPACITIES

Fuel tank ..... 605 ltr
Radiator ..... 37,0 ltr
Engine oil ..... 35,0 ltr
Swing drive ..... 13,7 ltr
Hydraulic tank ..... 188 ltr
Final drive (each side) ..... 9,0 ltr

ENVIRONMENT

Engine emissions ..... Fully complies with EU Stage IIIB and EPA Tier 4 interim exhaust emission regulations
Noise levels
LwA external ..... 105 dB(A) (2000/14/EC Stage II)
LpA operator ear ..... 71 dB(A) (ISO 6396 dynamic test)
Vibration levels (EN 12096:1997)*
Hand/arm ..... ≤ 2,5 m/s² (uncertainty K = 0,37 m/s²)
Body ..... ≤ 0,5 m/s² (uncertainty K = 0,17 m/s²)
* for the purpose of risk assessment under directive 2002/44/EC, please refer to ISO/TR 25398:2006.

OPERATING WEIGHT (APPR.)

	PC360LC-10		PC360NLC-10	
Triple grouser shoes	Operating weight	Ground pressure	Operating weight	Ground pressure
600 mm	34.620 kg	0,66 kg/cm²	34.510 kg	0,66 kg/cm²
700 mm	35.000 kg	0,57 kg/cm²	34.890 kg	0,57 kg/cm²
800 mm	35.380 kg	0,51 kg/cm²	35.270 kg	0,51 kg/cm²
850 mm	35.570 kg	0,48 kg/cm²	–	–

Operating weight, including specified work equipment, 3,2 m arm, 1.015 kg bucket, operator, lubricant, coolant, full fuel tank and the standard equipment.

Technical specifications

● = Standard ○ = Option

Features

Safety
- Spring-applied, hydraulic release (SAHR) brakes
- Automatic brake-test with diagnostics and logging
- ISO ROPS and FOPS certified cabin, oil-free operator's compartment and door interlock (applies brakes, blocks steering and bucket/boom movement when door opens)
- Separate disconnectors for a safe maintenance The best operator visibility in its class
- Speed limiter
- Guard rails

Comfort
- Increased leg-room with Epiroc footbox.
- Rubber mounted cabin or canopy for reduced vibration level.
- Ergonomic multifunction control joysticks.
- Simple and clear, multifunction display with intuitive operator interface, available in 11 languages.
- Comfortable air suspended seat.
- Steering and boom soft stop reduces vibration for the operator.

Productivity
- Load sensing variable displacement hydraulic pump for increased tractive effort and reduced fuel consumption.
- Load weighing system.
- Boom suspension with dual accumulator to provide a smooth ride, allowing to travel at higher speed and reducing spillage.
- Automation ready.
- Hydraulically driven fans for optimized fuel consumption and improved cooling capacity.

Serviceability
- Epiroc Rig Control System (RCS) provides service information in clear. text on the monitor.
- Easy access to service points, filters and valve blocks.
- Filter sensors with data collection for air, hydraulic and transmission filters.
- Daily lube points quick and easy to service.

Sustainability
- Fuel efficient, low emission EPA Tier 4 final/EU Stage V engine.
- Traction control, improves loading performance, reduces tire slip, improves tire life.
- Integrated lock-up and de-clutch functions, optimizes performance, saves fuel and improves life of drivetrain components.
- On board diagnostics give the operator a clear indicationof the machine status.
- Proven powertrain components.
- L and M V-tube core radiator.
- Machine status indication lights, displays the machine status for personnel working around the machine.

Engine

Cummins turbo charged diesel engine	Cummins QSM11	Cummins X12
Emmissions standard	EPA Tier III/ EU Stage IIIA	EPA Tier 4 Final/ EU Stage V
Power rating at 2 000 rpm	250 kW/335 hp	250 kW/335 hp
Maximum torque	1 674 Nm at 1 350 rpm	1 695 Nm at 1 400 rpm
MSHA Part 7 ventilation rate	326 m^3/min	Pending
MSHA Part 7 particulate index	354 m^3/min	Pending

Tier III/EU Stage IIIA: Dry type air filter, catalytic purifier and silencer, exhaust heat protection, cooling package with tube type radiator, remote engine oil and cooling fuel drain.
Tier 4 final/EU Stage V: Different engine, coolers, different after-treatment systems (dry type air filter with cyclone functionality, SCR, DPF, Diesel emission fluid system with separate tank/fill point including dosing pump and hoses/cables).
Please note! Requires ultra-low sulfur diesel and low ash engine oil.

Fuel

Fuel tank capacity: 390 litres	●
Fuel filtration, primary, including water trap: 7 µm	●
Fuel filtration, secondary: 3 µm	●

Axles

Brand/model: Kessler D106	●
Degree of oscillation (total): 16° (8° on each side)	●
Differentials: front, limited slip	●
Differentials: rear, limited slip	●

Tires

Tubeless tire design for underground mine service*	●
Tire size front and rear: 26.5R25 (slicks)	○
Tire size front and rear: 26.5R25 (treaded)	○

*As applications and conditions vary, Epiroc recommends that the user consults with tire suppliers to obtain the optimum tire selection.

Specifications

Capacities	
Tramming capacity	14 000 kg
Tramming capacity with EOD bucket	12 000 kg
Breakout force, hydraulic	22 300 kg
Breakout force, mechanical	18 240 kg
Weight	
Approximate weight	39 100 kg
Axle load, front end	18 900 kg
Axle load, rear end	20 200 kg
Motion times	
Boom raising	7.6 sec
Boom lowering	4.0 sec
Dumping	3.0 sec

Transmission

Automatic power shift with integrated converter, fully modulated 4 speed shifting, forward/reverse with automatic lock-up and de-clutch functions	●
Brand/model: Dana TE32	●

Brakes

Fully enclosed, force-cooled, multiple wet discs at each wheel end	●
Service/parking/emergency brakes: SAHR	●
Brake apply after 3 sec in neutral	○
Brake release retriever tow hook	○

Technical specifications

● = Standard ○ = Option

Cabin

FOPS and ROPS approved	●
Climate control, pressurized with filtrered air (ISO ROPS and FOPS)	○
Door interlock (applies brakes, blocks steering and bucket/ boom movement when door opens)	●
Open door retainer	●
Operator seat with air suspension and 2-point retractable seat belt	●
Side seated operator for bi-directional operation	●
Audio system	○
Body vibration value according to below EN 14253 A(8)w max. 0.8+/-0.4 m/s^2	
External sound level according to ISO 6393 LwA 126 dB(A)	
Sound level in cabin according to ISO 6394 LpA 103 dB(A)	
Sound level in cabin according to ISO 6394 LpA 82 dB(A)	

Hydraulic system

Heavy duty load sensing piston pumps	●
System pressure 29.6 MPa	●
Hydraulic tank capacity 218 litres	●
Filtration, return line: 12 µm	●
Manual pump for hydraulic tank fill	●
Electric pump for hydraulic tank fill, 24 V	○
Arctic oil	○
Steer cylinders: chrome plated stems, 2x105 mm diameter	
Hoist cylinders: chrome plated stems, 2x200 mm diameter	
Tilt cylinder: chrome plated stem, 1x230 mm diameter	

Control system

Epiroc Rig Control System (RCS)	●
Operator display with intuitive interface	●
Logging of production data, number of buckets, fuel consumption etc.	●
Brake test function with logging	●
Engine, transmission and hydraulic system diagnostics and logging	●
Save machine logged data on USB memory stick	●
Front and rear cameras	○
Audio-visual reverse alarm	●
Joystick controls for dump and hoist and steering	●
Forward/neutral/reverse toggle switch integrated in steering joystick	○
Machine status indicator light mounted on canopy cabin	●
Steering and boom soft stop reduces vibrations	●
Bucket float	●
Automatic ride control (boom suspension)	○
Traction control	●
Speed limiter	○
Machine protection	○
Machine warm up	●
Load weighing system	○
Tire pressure monitoring system	○
Delayed engine off, turbo cool down	○
Engine pre-start warning	○
Emergency steering (required for CE approved vehicles)	○
Redundant steering (required for CE approved vehicles)	○

Electrical system

System voltage: start and accessories 24V, with 24/12 V converter	●
Mine duty high output alternator: 140 Amps	●
Lockable disconnectors (main power, battery and starter)	●
Driving lights LED: 17x1 400 lumen	●
Detachable service light (required for CE approved vehicles)	○
Battery jump start receptacle	●
Cold weather package 120 V or 240 V. Block heater and artic oil	○

Main frame

Center hinge and boom lock up pins	●
EOD ejector bucket	○
Ground Engagement Tool (GET)	○
Wheel chocks and brackets	○
Knockdown construction	○
Central manual lubrication system	●
Central automatic lubrication system	○
Wiggins fast fill for fuel	○
Wiggins fast fill for engine oil, transmission, hydraulic and radiator	○
Hand held fire extinguisher	○
Ansul manually activated fire suppression	○
Ansul checkfire automatically activated fire suppression system	○
3x emergency stop buttons	●
Corrosion resistant radiator	○
Foldable guard rail (required for CE approved vehicles)	○

Automation

Scooptram Radio Remote Control (RRC)	○
Video assist	○
Scooptram Automation	○
Scooptram Tele Remote Control	○
Collison Avoidance System Interface (CAS)	○
Certiq telematics hardware for Wifi or LTE*	●
Certiq telematics solution professional*	○

*Certain country restrictions may exist

Parts and services

Preventive maintenance kits	○
Repair and rebuild kits	○
Upgrade kits	○
Face mechanics tool set	○
Shop mechanics tool set	○
Service tool box for RCS	○
Operators training in simulator	○

Documentation

Operator, service and spare parts manual on CD and hard copy	●

FLOODLIGHTS

- (4) light fixtures – 1000 watts each - metal halide
- Oval aluminum reflector
- Tempered glass lens
- Silicone gaskets for moisture and dust protection
- Friction disc mounting for tool less positioning
- Individual floodlight On/Off switches

MAST

- 30 ft. (9.14 m) maximum extension, 3-section
- Tubular steel frame – 3 in. (76.2 mm) square tube with 3/16 in. (4.78 mm) wall
- Urethane guides on all sides of mast tubes
- Industrial black powder coat finish
- 1500 lb. (680 kg) automatic self-breaking winches
- Dual winch system located at ergonomic height allowing single person operation
- 359° ground-level rotation with locking system
- Coiled mast cord
- Equipped with single lifting eye and fork pockets

ENCLOSURE

- Steel enclosure – 14-gauge
    - UV & fade resistant, high temperature cured, white polyester powder paint
    - 68 dB(A) at 23 ft. (7 m) – prime power
- Stainless steel hinges on doors
- Multi-lingual operating/safety decals
- License plate holder with light
- Manual holder with operating manual

TRAILER

- Removable tongue – 48 in. (1219.20 mm) long
  (4) 2000 lb. (907.18 kg) adjustable leveling jacks – 4 point stance
- All jacks transport and lock in horizontal position for storage
- Side outriggers – 140 in. (3.56 m) span
- 7800 lb. (3538 kg) safety chains with spring loaded safety hooks
- 2 in. (50.8 mm) ball hitch
- Single wall polyethylene fenders
- DOT approved tail, side, brake, and directional lights
    - Recessed rear lights
- 2200 lb. (998 kg) leaf spring axle
- ST175/80D13 – 6 ply
- 56 in. (1422.4 mm) axle span

D6 - Noise and vibration

D6.1 - NOISE LEVELS

Noise emitted by rotating machines

In a compressible medium, the mechanical vibrations of an elastic body create pressure waves which are characterized by the amplitude and frequency. The pressure waves constitute an audible noise if they have a frequency of between 16 and 16000 Hz.

Noise is measured by a microphone connected to a frequency analyzer. Measurements are taken in an anechoic chamber on machines on no-load, and a sound pressure level L_p or a sound power level L_w can then be established. Measurement can also be carried out in situ on machines which may be on-load, using an acoustic intensity meter which can differentiate between sound sources and identify the sound emissions from the machine.

The concept of noise is linked to hearing. The auditory sensation is determined by integrating weighted frequency components with isosonic curves (giving a sensation of constant sound level) according to their intensity.

The weighting is performed in sound meters using filters whose bandwidth takes into account, to a certain extent, the physiology of the human ear:

Filter A: *used for low and medium noise levels. High attenuation, narrow bandwidth.*
Filter B: *used for very high noise levels. Wide bandwidth.*
Filter C: *very low attenuation over the whole of the audible frequency range.*
Filter A is used most frequently for sound levels emitted by rotating machinery. It is this filter which is used when determining the characteristics.

A few basic definitions:

The unit of reference is the bel, and the sub-multiple decibel (dB) is used here.

Sound pressure level in dB

$L_p = 20\log_{10}\left(\frac{P}{P_0}\right)$ where $p_0 = 2.10^{-5}$ Pa

Sound intensity level in dB

$L_W = 10\log_{10}\left(\frac{P}{P_0}\right)$ where $p_0 = 10^{-12}$ W

Sound intensity level in dB

$L_W = 10\log_{10}\left(\frac{I}{I_0}\right)$ where $I_0 = 10^{-12}$ W/m^2

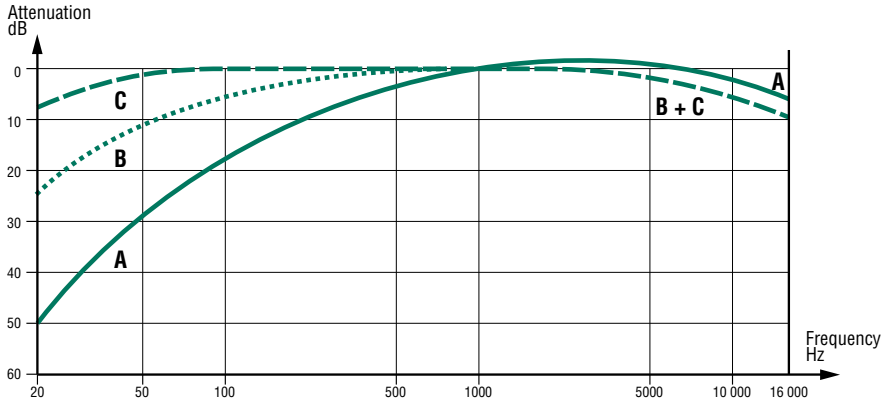

Correction of measurements

For differences of less than 10 dB between two sound sources or where there is background noise, corrections can be made by addition or subtraction using the rules below.

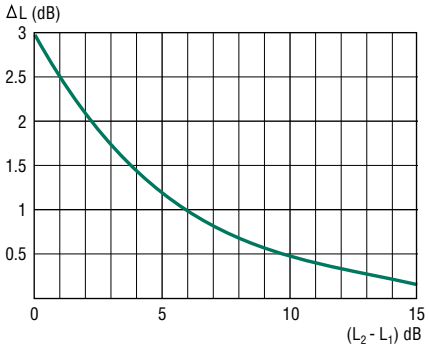

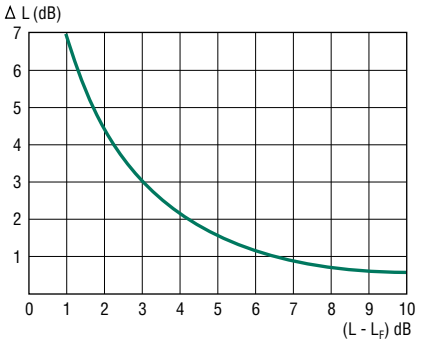

Addition

If L_1 and L_2 are the separately measured levels ($L_2 \geq L_1$), the resulting sound level L_R is obtained by the formula:

$$L_R = L_2 + \Delta L$$

ΔL is found by using the curve above s.

Subtraction*

This is most commonly used to eliminate background noise from measurements taken in a "noisy" environment.
If L is the measured level and L_F the background noise level, the actual sound level L_R will be obtained by the calculation:

$$L_R = L - \Delta L$$

ΔL is found by using the curve above s

**This method is the one normally used for measuring sound power and pressure levels. It is also an integral part of sound intensity measurement.*

305 CR Environmental Declaration

The following information applies to the machine at the time of final manufacture as configured for sale in the regions covered in this document. The content of this declaration is valid as of the date issued; however, content related to machine features and specifications are subject to change without notice. For additional information, please see the machine's Operation and Maintenance Manual.

For more information on sustainability in action and our progress, please visit https://www.caterpillar.com/en/company/sustainability.

Engine

- The Cat® C1.7 Turbo engine meets U.S. EPA Tier 4 Final and EU Stage V emission standards.
- Cat diesel engines are required to use ULSD (ultra-low sulfur diesel fuel with 15 ppm of sulfur or less) or ULSD blended with the following lower-carbon intensity fuels up to:
  - ✓ 20% biodiesel FAME (fatty acid methyl ester)*
  - ✓ 100% renewable diesel, HVO (hydrogenated vegetable oil) and GTL (gas-to-liquid) fuels

  Refer to guidelines for successful application. Please consult your Cat dealer or "Caterpillar Machine Fluids Recommendations" (SEBU6250) for details.

  **Engines with no aftertreatment devices can use higher blends, up to 100% biodiesel (for use of blends higher than 20% biodiesel, consult your Cat dealer).*

Air Conditioning System

- The air conditioning system on this machine contains the fluorinated greenhouse gas refrigerant R134a (Global Warming Potential = 1430). The system contains 1.0 kg (2.2 lb) of refrigerant which has a CO_2 equivalent of 1.430 metric tonnes (1.576 tons).

Paint

- Based on best available knowledge, the maximum allowable concentration, measured in parts per million (PPM), of the following heavy metals in paint are:
  - Barium < 0.01%
  - Cadmium < 0.01%
  - Chromium < 0.01%
  - Lead < 0.01%

Sound Performance

Operator Sound Pressure 72 dB(A) (ISO 6396:2008)*

Average Exterior Sound Pressure 99 dB(A) (ISO 6395:2008)**

*The declared dynamic operator sound pressure levels per ISO 6396:2008. The measurements were conducted with the cab doors and windows closed.

**The labeled sound power level for the CE marked configurations when measured according to the test procedure and conditions specified in 2000/14/EC.

Oils and Fluids

- Caterpillar factory fills with ethylene glycol coolants. Cat Diesel Engine Antifreeze/Coolant (DEAC) and Cat Extended Life Coolant (ELC) can be recycled. Consult your Cat dealer for more information.
- Cat Bio HYDO™ Advanced is an EU Ecolabel approved biodegradable hydraulic oil.
- Additional fluids are likely to be present, please consult the Operations and Maintenance Manual or the Application and Installation guide for complete fluid recommendations and maintenance intervals.

Features and Technology

- The following features and technology may contribute to fuel savings and/or carbon reduction. Features may vary. Consult your Cat dealer for details.
  - Advanced hydraulic systems balance power and efficiency
  - Power On Demand provides full time efficiency and power when you need it, and is transparent to the operator
  - Auto idle and auto engine shutdown
  - Extended maintenance intervals reduce fluid and filter consumption
  - Remote Flash and Remote Troubleshoot (if equipped)
  - Mini Hydraulic Excavator Ease of Use features improve operator efficiency minimizing fuel consumption (if equipped)
  - Cat Grade with Advanced 2D and 3D improves operator efficiency minimizing fuel consumption (if equipped)

Recycling

- The materials included in machines are categorized as below with approximate weight percentage. Because of variations of product configurations, the following values in the table may vary.

Material Type	Weight Percentage
Steel	65.52%
Iron	21.19%
Rubber	3.50%
Mixed Metal	2.20%
Other	1.89%
Nonferrous Metal	1.81%
Plastic	1.55%
Fluid	1.47%
Mixed-Metal and Nonmetal	0.85%
Mixed Nonmetallic	0.01%
Uncategorized	0.00%
Total	100.00%

- A machine with higher recyclability rate will ensure more efficient usage of valuable natural resources and enhance End-of-Life value of the product. According to ISO 16714 (Earth-moving machinery – Recyclability and recoverability – Terminology and calculation method), recyclability rate is defined as percentage by mass (mass fraction in percent) of the new machine potentially able to be recycled, reused or both.

  All parts in the bill of material are first evaluated by component type based on a list of components defined by the ISO 16714 and Japan CEMA (Construction Equipment Manufacturers Association) standards. Remaining parts are further evaluated for recyclability based on material type.

  Because of variations of product configurations, the following values in the table may vary.

Recyclability – 96%

Tadano electronic LOAD MOMENT INDICATOR system (AML-L) including:

- Control lever lockout function
- Lift status indicator
- Outrigger status indicator
- Warning buzzer
- Boom angle / boom length / jib offset angle / load radius / rated lifting capacities / actual loads read out
- Ratio of actual load moment to rated load moment indication
- Automatic Speed Reduction and Soft Stop function on boom elevation and swing.(swing range restricted only)
- Working condition register switch
- Load radius / boom angle / tip height / swing range preset function
- External warning lamp

TADANO AML-L monitors outrigger extended length and automatically programs the corresponding "RATED LIFTING CAPACITIES" table.

Operator's right hand console includes transmission gear selector and sight level bubble. Upper console includes working light switch, roof washer and wiper switch, oil cooler switch, emergency outrigger set up key switch and air conditioning control switch. Swing lock lever and 3 way adjustable seat with high back and seat belt.

NOTE: Each crane motion speed is based on unladen conditions.

CARRIER SPECIFICATIONS

TYPE - Rear engine, left hand steering, 4x2 front drive or 4x4 front and rear drive, selected by 2-way manual switch.

FRAME - High tensile steel, all welded mono-box construction.

TRANSMISSION - Electronically controlled full automatic transmission. Torque converter driving full powershift with driving axle selector. 6 forward and 2 reverse speeds, constant mesh.

4 speeds - high range - 2 wheel drive; 4 wheel drive
4 speeds - low range - 4 wheel drive

TRAVEL SPEED - 31 mph (50 km/h)

AXLE - Front: Full floating type, steering and driving axle with planetary reduction. Rear: Full floating type, steering and driving axle with planetary reduction and non-spin rear differential.

STEERING- Hydraulic power steering controlled by steering wheel. Three steering modes available: 2 wheel front, 4 wheel coordinated and 4 wheel crab.

SUSPENSION - Front: Semi-elliptic leaf springs with hydraulic lockout device. Rear: Semi-elliptic leaf springs with hydraulic lockout device.

BRAKE SYSTEMS - Service: Air over hydraulic disc brakes on all 4 wheels. Parking/Emergency: Spring applied-air released brake acting on input shaft of front axle. Auxiliary: Electro-pneumatic operated exhaust brake.

TIRES - 23.5-25 20PR(OR)

OUTRIGGERS - Four hydraulic, beam and jack outriggers. Vertical jack cylinders equipped with integral holding valve. Each outrigger beam and jack is controlled independently from cab. Beams extend to 22'11-5/8" (7.0 m) center-line and retract to within 9' 10-1/8" (3.0 m) overall width with floats. Outrigger jack floats are attached thus eliminating the need of manually attach and detach them. Controls and sight bubble located in superstructure cab. Three outrigger extension lengths are provided with corresponding "RATED LIFTING CAPACITIES" for crane duty in confined areas.

Mid. Extension	16' 4-7/8" center to center
Mid. Extension	21' 3-7/8" center to center
Max. extension	22' 11-5/8" center to center
Float size(Diameter)	1'7-11/16"(0.5m)

ENGINE

Model	Mitsubishi 6M60-TLA3B
Type	Direct injection diesel
No. of cylinders	6
Combustion	4 cycle, turbo charged and after cooled
BoreXStroke, in.(mm)	4.646 X 4.528 (118X115)
Displacement, cu. in (liters)	460 (7.54)
Air inlet heater	24 volt preheat
Air cleaner	Dry type, replaceable element
Oil filter	Full flow with replaceable element
Fuel filter	Full flow with replaceable element
Fuel tank, gal.(liters)	79.2 (300), right side of carrier
Cooling	Liquid pressurized, recirculating by-pass

Radiator	Fin and tube core, thermostat controlled
Fan, in.(mm)	Suction type, 6-blade, 23.6 (600) dia.
Starting	24 volt
Charging	24 volt system, negative ground
Battery	2-120 amp. Hour
Compressor, air, CFM(l /min)	29 CFM (830) at 2,600rpm
Horsepower (kW)	Gross 267 (200) at 2,600rpm
Torque, Max. ft-lb (kgm)	579 (80) at 1,400rpm
Capacity, gal.(liters)	
Cooling water	3.4 (13)
Lubrication	3.4-4.0 (13-15)
Fuel	79.2 (300)

Model:WP10H400E50 Brand:Weichai

Product Description

Motor	WP10H400E50	Motor Brand	Weichai
Series	WP10H	Motor Manufaturer	Weichai Power Co., Ltd.
Adaption range	Truck engines	Intake form	Inter-cooling
Cylinders	6	Fule type	Diesel
Cylinders Arrangement	Inline	Displacement	9.5L
Emission Standard	Euro 5	Max output power	294kW
Rated speed	1900rpm	Max horse power	400HP
Max torque	1900N.m	Max torque speed	1200-1300rpm
Full load minimum fuel consumption	≤185g/kW.h	Motor form	CRDI+SCR
One meter away noise	95.8dB	Bore diameter x stroke	116×150mm
Per cylinder valves	4		



Technical Specification

CATEGORY	ITEM		UNIT	VALUE
CAPACITY	Max. lifting capacity		t	150
WEIGHT	Gross weight		kg	54980
POWER	Chassis	Engine model	-	WP12.460E50 (China National V)
		Max. engine power	kW/rpm	338/1900
		Max. engine torque	N·m/rpm	2150/1000~1400
	Superstructure	Engine model	-	WP6G240E330 (China National Ⅲ)
		Max. engine power	kW/rpm	176/2300
		Max. engine torque	N·m/rpm	860/1200-1700
DIMENSIONS	Overall length		mm	15530
	Overall width		mm	3000
	Overall height		mm	4000
	Axle base	Axle 1 & 2	mm	1980
		Axle 2 & 3	mm	3330
		Axle 3 & 4	mm	1450
		Axle 4 & 5	mm	1500
TRAVEL	Max. travel speed		km/h	85
	Min. steering radius		m	11.5
	Min. steering radius of boom tip		m	13.8
	Min. ground clearance		mm	310
	Approach angle		°	18
	Departure angle		°	12.5
	Max. gradeability		%	46
	Fuel consumption per km		L	≤70
MAIN PERFORMANCE	Max. rated lifting capacity		t	150
	Min. rated radius		m	3
	Tail slew radius		m	4.65
	Boom section		Qty.	7
	Max. lifting moment	Basic boom	kN·m	4733
		Full-extend boom	kN·m	1820
		Full-extend boom + jib	kN·m	1188
	Outrigger span (longitudinal × transversal)		m	7.975 × 7.95
	Boom length	Basic boom	m	13.6
		Full-extend boom	m	73
		Max. combination of boom + jib	m	86.2 (standard) / 100.2 (optional)
	Jib offset		°	0, 15, 30
OPERATION SPEED	Max. lifting speed of single rope of main winch (empty load)		m/min	135
	Max. lifting speed of single rope of main winch (full load)		m/min	40
	Max. lifting speed of single rope of auxiliary winch (empty load)		m/min	135
	Max. lifting speed of single rope of auxiliary winch (full load)		m/min	40
	Full extension/retraction time of boom		s	600/640
	Full luffing up/down time of boom		s	60/90
	Slewing speed		r/min	1.8

Transmission

Forward 1	12.1 km/h	7.5 mph
Forward 2	16.3 km/h	10.2 mph
Forward 3	22.2 km/h	13.8 mph
Forward 4	29.9 km/h	18.6 mph
Forward 5	40.6 km/h	25.2 mph
Forward 6	54.8 km/h	34 mph
Reverse	11 km/h	6.8 mph
Total Final Drive Reduction Ratio	22.75:1	

- Maximum travel speeds with standard 33.00-R51 tires.

Suspension

Cylinder Stroke – Front	320 mm	12.6 in
Cylinder Stroke – Rear	165 mm	6.5 in

Body Hoists

Body Raise Time– High Idle	15.2 Seconds
Body Lower Time- Float High Idle	15.9 Seconds
Body Lower Time– Float Low Idle	16.2 Seconds
Body Power Down– High Idle	15.9 Seconds

- Twin, two-stage hydraulic cylinder mounted outside main frame; double-acting cylinders in second stage.
- Power raise in both stages; power down in second stage.
- Automatic body lower modulation reduces impact on frame.

Braking System

Brake Surface – Front	61 270 cm^2	9.487 in^2
Brake Surface –Rear	89 728 cm^2	13,908 in^2
Standards	ISO 3450:2011	

- Oil cooled four corner hydraulic actuated disc brakes.

Weight Distributions – Approximate

Front Axle – Empty	48%
Rear Axle – Empty	52%
Front Axle – Loaded (target)	33%
Rear Axle – Loaded (target)	67%

Body

Standard Dual Slope Weight	23 538 kg	51,892 lb
Standard Dual Slope Volume (SAE 2:1)	78 m^3	102 yd^3
Standard MSD Weight	21 188 kg	46,711 lb
Standard MSD Volume (SAE 2:1)	99 m^3	130 yds^3

- Body weight only. Does not include liners.
- Contact your local Cat dealer for site specific body recommendations.

Service Refill Capacities

Fuel Tank	1552 L	410 gal
DEF Tank	136 L	36 gal
Cooling System	379 L	100 gal
Engine Crankcase	204 L	54 gal
Differentials and Final Drives	527 L	139 gal
Steering Tank	110 L	29 gal
Steering System (includes tank)	170 L	45 gal
Brake/Hydraulic Tank	511 L	135 gal
Brake/Hoist System (includes tank)	606 L	160 gal
Torque Converter/Transmission System (includes sump)	175 L	46 gal

- Separate steering system and separate torque converter/transmission system prevents cross contamination.
- Contact your local Cat dealer for DEF infrastructure recommendations.

Steering

Steering Standards	ISO 5010:2007	
Turning Diameter – ISO 7457:1997 (33.00R51 tires)	29.8 m	97 ft 9 in
Machine Clearance Diameter – ISO 7457:1997 (33.00R51 tires)	33.2 m	108 ft 11 in
Steering Angle	36 degrees	

ROPS

- ROPS (Rollover Protective Structure) for cab offered by Caterpillar meets ISO 3471:2008 ROPS and ISO 13459:2012 criteria.
- FOPS (Falling Objects Protective Structure) meets ISO 3449:2005 and ISO 13459:2012 Level II criteria.

Sound

Cooling Fan Drive	Direct Drive	Optional Clutch
Operator Sound Level (ISO 6396:2008)	77 dB(A)	75 dB(A)
Machine Sound Level (ISO 6395:2008)	121 dB(A)	120 dB(A)

- Testing done per specified standard work cycle procedures and conditions with 50% HVAC blower fan speed. Optional clutch control fan measurement done at 70% of maximum engine cooling fan speed.
- Hearing protection may be needed when operating with an open operator station/cab (when not properly maintained or doors/windows open) for extended periods or in a noisy environment.

MRX Series Pedestal Rock Breaker System

BOOM & HAMMER COMBINATIONS

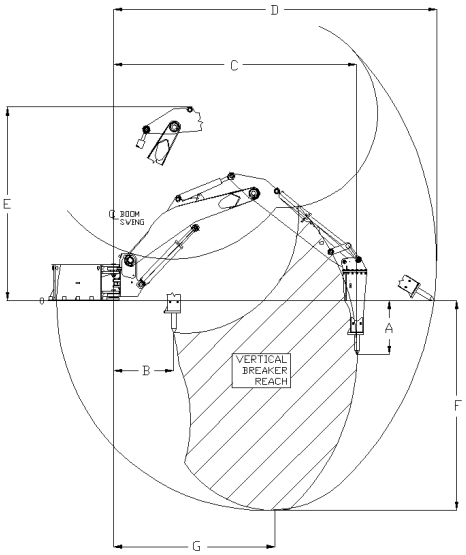

Hammer Specifications

Hammer Models:	BX40	BXR50	BXR65	BXR85
Impact Energy Class: ft-lb (J)	4000 (5423)	5000 (6779)	6500 (8812)	8500 (11524)
Operating Weight: lb. (kg.)	3749 (1700)	3880 (1760)	4563 (2070)	6463 (2931)
Working Length in. (mm)	108.8 (2764)	107.0 (2718)	110.8 (2813)	127.6 (3240)
Tool Diameter in. (mm)	5.1 (135)	5.5 (140)	5.9 (150)	6.3 (160)
Operating Flow gpm (lpm)	29-42 (110-160)	38-54 (144-204)	42-60 (158-227)	52-75 (197-284)
Operating Pressure psi (bar)	1885-2465 (120-170)	2180-2760 (150-190)	2180-2760 (150-190)	2180-2760 (150-190)
Impact Frequency bpm (short stroke)	380-600	374-611 (514-840)	341-561 (454-746)	328-544 (436-723)
Sound / Distance* at 85 dB(A): ft. (m)	135 (41)	142 (43)	146 (44)	150 (45)

(*): BX & BXR hammers are furnished with a sound suppressing housing for superior noise attenuation. Noise levels may vary due to site conditions and barriers.

Coverage

	MRX24				MRX30				MRX3036			MRX36		
ft. (m)	BX40	BXR50	BXR65	BXR85	BX40	BXR50	BXR65	BXR85	BX40	BXR50	BXR65	BX40	BXR50	BXR65
A	4'-6" (1.4)	4'-6" (1.4)	5'-0" (1.5)	6'-7" (2.0)	5'-7" (1.7)	5'-7" (1.7)	6'-2" (1.9)	7'-9" (2.4)	5'-7" (1.7)	5'-7" (1.7)	6'-2" (1.9)	5'-7" (1.7)	5'-7" (1.7)	6'-2" (1.9)
B	5'-9" (1.7)	5'-9" (1.7)	6'-0" (1.8)	6'-2" (1.9)	6'-7" (2.0)	6'-7" (2.0)	6'-10" (2.0)	7'-0" (2.1)	7'-7" (2.3)	7'-9" (2.3)	7'-11" (2.4)	8'-6" (2.6)	8'-10" (2.7)	9'-0" (2.7)
C	24'-3" (7.4)	24'-3" (7.4)	24'-6" (7.5)	24'-8" (7.5)	30'-0" (9.1)	30'-3" (9.2)	30'-3" (9.2)	30'-5" (9.3)	33'-0" (10.0)	33'-3" (10.1)	33'-3" (10.1)	36'-0" (11.0)	36'-3" (11.0)	36'-3" (11.0)
D	32'-4" (9.9)	32'-4" (9.9)	32'-9" (10.0)	33'-10" (10.3)	38'-6" (11.7)	38'-8" (11.8)	38'-11" (11.9)	40'-0" (12.2)	42'-4" (12.9)	42'-4" (12.9)	42'-9" (13.0)	44'-10" (13.8)	44'-10" (13.8)	45'-3" (13.8)
E	17'-2" (5.2)	17'-2" (5.2)	17'-2" (5.2)	17'-2" (5.2)	21'-6" (6.6)	21'-6" (6.6)	21'-6" (6.6)	21'-6" (6.6)	21'-6" (6.6)	21'-6" (6.6)	21'-6" (6.6)	30'-0" (9.1)	30'-0" (9.1)	30'-0" (9.1)
F	20'-11" (6.2)	20'-11" (6.2)	21'-6" (6.6)	23'-1" (7.0)	27'-3" (8.3)	27'-3" (8.3)	27'-10" 8.5)	29'-7" (9.0)	28'-1" (8.6)	28'-1" (8.6)	30'-9" (9.4)	28'-10" (9.2)	28'-10" (9.2)	31'-11" (9.7)
G	14'-10" (4.5)	15'-1" (4.6)	15'-1" (4.6)	15'-3" (4.6)	16'-0" (4.9)	16'-3" (5.0)	16'-3" (5.0)	16'-5" (5.0)	17'-0" (5.2)	17'-3" (5.3)	17'-3" (5.3)	17'-9" (5.4)	18'-0" (5.5)	18'-0" (5.5)

Tool Selection (for aggregate production and mining)



• Blunt is used for boulder and oversize breaking; tool impact delivers the stress wave generated by the hammer causing the material to fracture; excellent wear resistance



• Chisel is suitable for slabby, angular material; tool provides wedge effect impact and good penetration



• Moil is ideal for softer, abrasive material where high penetration is needed; similar to the blunt it results in less torque in the front head

Concave Removal Tool

For Gyratory Crusher

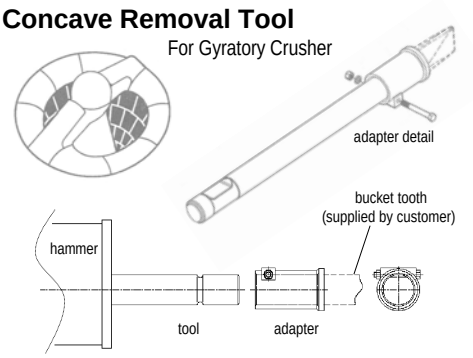

Note: Adapter tool length is 72 in. (1829 mm) long plus adapter and tooth

NOISE ASSESSMENTS

GENERAL INTRODUCTION

All piling activity generates noise. The consequences of the additional noise may be a health hazard or a cause of annoyance to the general public.

Construction site noise levels, in decibels (dB), are usually 'A-weighted' to give measurements and levels relative to the sensitivity of the human ear.

The accepted measure of noise is the equivalent 'A-weighted' sound pressure level, L_{Aeq}, relative to a specified time period, T.

A number of factors are likely to affect the acceptability of noise arising from construction sites which include:

- Site location.
- Existing background noise levels.
- Duration of site operations.
- Hours of work.
- Provision of additional mitigation measures.

If noise levels increase from the background level by 3dB (A) then the change is just perceptible. If the noise level increases by 10dB (A) then it is perceived as being twice as loud. A 20dB (A) increase implies a tenfold increase in noise level.

DESIGN STANDARDS & REFERENCES

- **BS 5228 (2009) Part 1** - Code of practice for noise and vibration control on construction and open sites.
- **Control of Pollution Act (CoPA) 1974** - Applications for prior consent for work on construction sites.

FORMULA FOR CALCULATION OF NOISE

The base sound pressure levels for specialist piling equipment can be obtained from relevant manufaturers and typical values are summarised below:

- High Frequency Vibrohammers ie. MRZV 18V L_{pA} = 115 dB(A)
- Hydraulic Drop Hammers L_{pA} = 125dB (A).

Noise attenuates with distance from the source which can be defined by empirical equations.

Therefore to calculate an equivalent continuous A-weighted sound level over an 'effective' working day duration the following equations are used:

L_{Aeq} = L p A - 20 log (R) - 8 For R<25m
L_{Aeq} = L p A - 25 log (R) - 1 For R>25m

Where, R = Distance from Noise Source (m).

In general, piling operations will typically run between 10% and 50% of the working day.

Consequently the previously presented formula can be further modified according to the following equation:

L_{Aeq} (red) = L_{Aeq} + 10 log $(\frac{t1}{T})$

Where:

t1 = Actual piling time.
T = Total working period per day.

TYPICAL WORKED EXAMPLE

Assuming the sheet piles are installed using an ABI MRZV 18V vibratory hammer the following are noted:

- Base Sound Pressure Level L_{pA} = 115 dB (A)

Therefore the following attenuated noise level of various distances from the source can be calculated as follows:

Distance 'R' (m)	2.0	5.0	10.0	25.0
Attenuated noise level L_{Aeq} dB(A)	101	93	87	79

Distance 'R' (m)	50.0	75.0	100.0	150.0
Attenuated noise level L_{Aeq} dB(A)	72	67	64	60

Assuming a maximum piling duration of 5 hours per day (ie. 50%) the calculated values above can be further modified as follows:

Distance 'R' (m)	2.0	5.0	10.0	25.0
Attenuated noise level L_{Aeq} (red) dB(A)	98	90	84	76

Distance 'R' (m)	50.0	75.0	100.0	150.0
Attenuated noise level L_{Aeq} (red) dB(A)	69	64	61	57

Consequently the attenuated noise levels, as adjusted for time of piling operations, are reduced at various distances from the noise source by approximately 3 dB(A).

GROUND BORNE VIBRATION ASSESSMENTS

GENERAL INTRODUCTION

The installation of steel sheet piles using vibratory installation techniques will inevitably result in ground borne vibrations. The vibration level is a function of the power rating and frequency of the vibrohammer from which peak particle velocities and particle accelerations can be calculated based on to some extent the type and nature of soils. The vibration levels at the source will naturally attenuate with distance.

DESIGN STANDARDS & REFERENCES

- **BS 5228 (1992) Part 4** - Code of practice for noise and vibration control applicable to piling.
- **BS 5228 (2009) Part 2** - Code of practice for noise and vibration control applicable to piling.
- **British Steel (CORUS)** - Control of vibration and noise during piling.
- **BS 7385 Part 1** - Guide for measurement of vibrations and evaluation of their effects on buildings.
- **BS 7385 Part 2** - Guide on damage levels from ground borne vibrations.

FORMULA FOR CALCULATION OF PEAK PARTICLE VELOCITY (PPV)

For vibratory driven sheet piles, the maximum peak particle velocity (PPV) can be derived from the following empirical formula:

$$V\,res = \frac{C^*\sqrt{W}}{r}$$

Where:
- V res = Maximum peak particle velocity (mm/sec).
- C = Soil Hammer Factor (Recommended as 1.0 for vibratory hammer).
- W = The maximum hammer energy per cycle (J).
- r = Horizontal distance from piling operations (m).

TYPICAL WORKED EXAMPLE

Assuming the sheet piles are installed using an ABI MRZV 18S Vibratory Hammer the following are noted:

- Stated Power Rating = 433 kW.
- Frequency = 2250 rpm (37Hz).
- Energy = 433 kW/37Hz.
  = 11702J/Cycle.
- Efficiency = 80%
- Hammer energy (w) = 11702J x 80% = 9362J

Therefore an assessment of the possible vibration levels can be undertaken using the formula presented in BS5228 Part 4 (1992).

The results of this example are presented below:

Distance (m)	2.0	5.0	8.0	10.0
Predicted PPV (mm/s)	48.4	19.4	12.1	9.7

Distance (m)	12.0	15.0	20.0	50.0
Predicted PPV (mm/s)	8.1	6.5	4.8	1.9

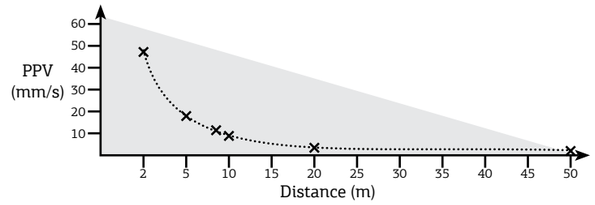

FURTHER COMMENTS

The revised standard, BS5228 Part 2 (2009) presents an equation for vibratory installation of piles which is based on percentage confidence levels based on the predicted vibration not being exceeded.

This method is entirely empirical and does not take account of soil conditions or hammer type.

Experience suggests there is some correlation with the BS5228 Paart 2 (1992) method based on 33.3% probability of exceeding confidence levels.

Service Refill Capacities

Fuel Tank Capacity	1700 L	449 gal
Hydraulic Oil Tank Capacity	956 L	253 gal
Total Volume of Hydraulic Oil	1752 L	463 gal
Engine Oil	87 L	23 gal
Engine Coolant	165 L	44 gal
Both Swing Drives and Reservoir	38 L	10 gal
Travel Gearbox	2 × 20 L	2 × 5.3 gal
Grease Tank Capacity	68 L	18 gal

Hydraulic System

Main Pumps	3 × variable swash plate pumps	
Maximum Oil Flow	1544 L/min	407 gal/min
Maximum Pressure, Attachment	320 bar	4,641 psi
Maximum Pressure, Travel	320 bar	4,641 psi
Swing Pumps	1 × variable swash plate pumps	
Maximum Oil Flow	479 L/min	127 gal/min
Maximum Pressure	365 bar	5,294 psi

Hydraulic Oil Cooling

Maximum Oil Flow of Cooling Pumps	1075 L/min	284 gal/min
Number of Fans	2	
Diameter of Fans	1016 mm	40 in
Fan Speed	Thermostatically controlled	
Cooling System	Fully independent	

Swing System

Swing Drives	Two compact planetary transmissions with axial piston motors
Parking Brake	Wet multiple-disc brake, spring-loaded/hydraulically released
Maximum Swing Speed	4.9 rpm
Swing Ring	Cross roller bearing with sealed internal gearing
Swing Circuit	Closed-loop with torque control

Undercarriage

Travel Speed (two stages)		
1st Stage – Maximum	2.6 km/h	1.6 mph
2nd Stage – Maximum	3.7 km/h	2.3 mph
Maximum Tractive Force	877 kN	197,157 lbf
Maximum Drawbar Pull	800 kN	179,847 lbf
Gradeability of Travel Drives – SAE J1309	38°/78% approximate	
Maximum Machine Inclination – Travel	23°/42%	
Track Pads (each side)	46	
Track Rollers (each side)	9	
Carrier Rollers (each side)	3	
Travel Drives (each side)	Planetary transmission with two-stage axial piston motor	
Parking Brake	Wet multiple disc brake, spring loaded/hydraulically released	

Operator Environment

Operator's Eye Level ISO 3411:2007	3.56 m	11 ft 8 in
Spectator Sound Power Level (L_{WA}) ISO 6395:2008*	114.0 dB(A)	
Operator Sound Pressure Level (L_{WA}) ISO 6396:2008*	70.5 dB(A)	
Operator Protective Guard (front and top guard)	ISO 10262:1998 Level II	

*Measurement was conducted at 70% of the maximum engine cooling fan speed. The sound level may vary at different engine cooling fan speeds. The cab was properly installed and maintained. The measurement was taken with the cab doors and windows closed. NOTE: The dynamic sound power level and sound pressure level uncertainty is ±2 dB(A).

Air Conditioning System

The air conditioning system on this machine contains the fluorinated greenhouse gas refrigerant R134a (Global Warming Potential = 1430). The system contains 2.1 kg (4.63 lb) of refrigerant, which has a CO_2 equivalent of 3.003 t (3.3102 U.S. tons) per engine.

Optimal Pass Match with Cat Trucks

	773	775	777
Cat 6015	4	5	7

Hydraulic System – Lift/Tilt

Lift/Tilt System – Circuit	Positive Flow Control	
Lift/Tilt System – Pump	Variable Piston	
Maximum Flow at 1,650 rpm	1180 L/min	311 gal/min
Relief Valve Setting – Lift/Tilt	29 500 kPa	4,200 psi
Cylinders – Lift/Tilt	Double-acting	
Lift Cylinder – Bore	267 mm	10.5 in
Lift Cylinder – Stroke	1682 mm	66.2 in
Tilt Cylinder – Bore	235 mm	9.3 in
Tilt Cylinder – Stroke	1040 mm	40.9 in

• High Lift configuration.

Hydraulic Cycle Time

Rackback	2.4 seconds
Raise	9.2 seconds
Dump	1.8 seconds
Lower	3.8 seconds
Lower Float Down	3.1 seconds
Total Hydraulic Cycle Time	17.2 seconds

• High Lift configuration, calculated speeds.

Hydraulic System – Steering

Steering System – Circuit	Closed	
Steering System – Pump	Piston, variable displacement	
Maximum Flow @ 1,985 rpm (6900 kPa/1,000 psi)	505 L/min	133 gal/min
Relief Valve Setting – Steering	34 500 kPa	5,000 psi
Total Steering Angle	86 degrees	

Service Refill Capacities

Fuel Tank	2170.0 L	573.3 gal
Cooling System	303.5 L	80.2 gal
Crankcase	120.0 L	31.7 gal
Transmission	196.9 L	52.0 gal
Differentials and Final Drives – Front	482.0 L	127.3 gal
Differentials and Final Drives – Rear	482.0 L	127.3 gal
Hydraulic System Factory Fill	873.0 L	230.0 gal
Hydraulic System (tank only)	553.0 L	146.0 gal

• High Lift configuration.

Buckets

Bucket Capacities	12.2-23.7 m^3	16.0-31.0 yd^3

Axles

Front	Fixed
Rear	Trunnion
Oscillation Angle	10 degrees

Sound

Operator Sound Pressure (ANSI/SAE J1166 FEB08)	72 dB(A)
Dynamic Operator Sound Pressure (ISO 6396:2008)	70 dB(A)

- Hearing protection may be needed when the machine is operated with a cab that is not properly maintained or when the doors or windows are open for extended periods or in a noisy environment. Hearing protection may be needed when the machine is operated with a cab that is not properly maintained or when the doors and windows are open for extended periods or in a noisy environment.
- The machine sound power level is 116 dB(A), measured according to the test procedures and conditions specified in ISO 6395:2008 for the standard machine configuration. The measurement was conducted at 70 percent of the maximum engine cooling fan speed.
- The machine sound power level is 113 dB(A), measured according to the test procedures and conditions specified in ISO 6395:2008 for the sound suppressed machine configuration. The measurement was conducted at 70 percent of the maximum engine cooling fan speed.

TECHNICAL SPECIFICATIONS

See cat.com/6030 for complete specifications.

DIESEL ENGINES – LESSER REGULATED		
Make and model		2x Cat C27
Rated speed	1,800 min-1	1,800 rpm
Total rated gross power – SAE J1995	1141 kW	1529 hp
Total rated net power – SAE J1349	1125 kW	1508 hp
Total rated net power – ISO 9249	1128 kW	1511 hp
(Meets China Nonroad Stage III emissions standards, equivalent to U.S. EPA Tier 2.)		

DIESEL ENGINES – HIGHLY REGULATED		
Make and model		2x Cat C27
Rated speed	1,800 min-1	1,800 rpm
Total rated gross power – SAE J1995	1209 kW	1620 hp
Total rated net power – SAE J1349	1192 kW	1597 hp
Total rated net power – ISO 9249	1194 kW	1600 hp
(Meets U.S. EPA Tier 4 Final and EU Stage V emission standards.)		

ELECTRICAL SYSTEM	
System Voltage	24 V
Batteries in series / Parallel Installation	4 x 210 Ah – 12 V each 420 Ah – 24 V

OPERATING WEIGHTS		
Face Shovel (FS)	298 300 kg	657,640 lb
Backhoe (BH)	299 400 kg	660,060 lb
* Operating weights include: base machine, front attachment, standard track pads, standard rock bucket, 100% fuel and lubricants.		

SERVICE REFILL CAPACITIES		
Fuel Tank Capacity	2 x 2540 L	2 x 671 gal
Hydraulic Tank	2500 L	660 gal
Hydraulic System (including tank)	3500 L	925 gal
Engine Oil	2 x 99 L	2 x 26.2 gal
Engine Coolant	2 x 150 L	2 x 39.6 gal
Grease container	450 L	119 gal

HYDRAULICS		
Maximum Flow to Main Pumps	4 x 552 L/min	4 x 146 gal/min
Maximum Pressure – Attachment	310 bar	4,495 psi
Maximum Pressure – Travel	360 bar	5,220 psi
Maximum Flow to Swing Pumps	4 x 197 L/min	4 x 52 gal/min
Maximum Pressure – Swing	350 bar	5,076 psi

SWING SYSTEM	
Swing Speed	4.6 rpm
Swing Circuit	Closed-loop with Torque Control

UNDERCARRIAGE		
Maximum Travel Speed – 1st stage	1.4 km/h	0.87 mph
Maximum Travel Speed – 2nd stage	2.7 km/h	1.68 mph
Maximum Tractive force	1637 kN	367,880 lbf

OPERATOR ENVIRONMENT		
Operator's Eye Level	6.5 m	21 ft 4 in
Spectator Sound Power Level (L_{WA}) ISO 6395:2008		114.9 dB(A)
Operator Sound Pressure Level (L_{PA}) ISO 6396:2008		78 dB(A)
Operator Protective Guard ISO 10262:1998 Level II		Front and Top Guard

DIMENSIONS		
Height overall	8050 mm	26 ft 5 in
Height of tracks	1940 mm	6 ft 4 in
Clearance under counterweight	2170 mm	7 ft 1 in
Tail swing radius	6450 mm	21 ft 2 in
Width overall (@ 1000 mm standard pads)	7520 mm	24 ft 8 in
Crawler length	7660 mm	25 ft 2 in
Track gauge	4800 mm	15 ft 9 in

WORKING RANGES AND FORCES		
FACE SHOVEL		
Boom	6.2 m	20 ft 4 in
Stick	4.4 m	14 ft 5 in
Standard Rock Bucket Heaped 2:1 (ISO 7546)	16.5 m^3	21.6 yd^3
G.E.T. System with six (6) teeth	C95	
Max Crowd Force (ISO)	1898 kN	291, 700 lbf
Max Breakout Force	954 kN	214,390 lbf
Max Digging Height	13.9 m	45 ft 7 in
Max Digging Reach	13.7 m	44 ft 11 in
BACKHOE		
Boom	8.5 m	27 ft 11 in
Stick	4.0 m	13 ft 1 in
Standard Rock Bucket Heaped 2:1 (ISO 7546)	17.0 m^3	22.2 yd^3
G.E.T. System with six (6) teeth	C85	
Max Tearout Force (ISO)	944 kN	212,150 lbf
Max Breakout Force	880 kN	197,760 lbf
Max Digging Height	13.8 m	45 ft 3 in
Max Digging Reach	15.1 m	49 ft 6 in

Hydraulic Oil Cooling

Oil Flow of Cooling Pumps	2 × 467 L/min	2 × 123 gal/min
Number of Fans	2	
Diameter of Fans	1220 mm	48 in
Fan Speed	Thermostatically controlled	
Cooling System	Fully independent	

Swing System

Swing Drives	2 compact planetary transmissions with axial piston motors
Parking Brakes	Wet multiple-disc brake, spring-loaded/hydraulically released
Maximum Swing Speed	4.6 rpm
Swing Ring	Triple-race roller bearing with sealed internal gearing
Swing Circuit	Closed-loop with torque control

Undercarriage

Travel Speed (2 stages)		
1st Stage – Maximum	1.4 km/h	0.87 mph
2nd Stage – Maximum	2.7 km/h	1.68 mph
Maximum Tractive Force	1602 kN	360,144 lbf
Gradeability of Travel Drives	25.6°/47%	
Track Pads (each side)	44	
Bottom Rollers (each side)	7	
Support Rollers (each side)	2 plus a skid plate in between	
Travel Drives (each side)	1 planetary transmission with 2 two-stage axial piston motors	
Parking Brakes	Wet multiple disc brake, spring loaded/hydraulically released	

Operator Environment

Operator's Eye Level – Approximately	6.5 m	21 ft 4 in
Internal Dimensions of Cab		
Length	2200 mm	7 ft 3 in
Width	1600 mm	5 ft 3 in
Height	2150 mm	7 ft 1 in
Spectator Sound Power Level (L_{WA})* ISO 6395:2008	117 dB(A)	
Operator Sound Pressure Level (L_{PA})* ISO 6396:2008	76 dB(A)	
Operator Protective Guard (Front and Top Guards)	ISO 10262:1998 Level II	

* Measurement was conducted at 70% of the maximum engine cooling fan speed. The sound level may vary at different engine cooling fan speeds. The cab was properly installed and maintained. The measurement was taken with the cab doors and windows closed.

NOTE: The dynamic sound power level and sound pressure level uncertainty is ±2 dB(A).

Air Conditioning System

The air conditioning system on this machine contains the fluorinated greenhouse gas refrigerant R134a (Global Warming Potential = 1430). The system contains 2.8 kg (6.2 lb) of refrigerant, which has a CO_2 equivalent of 4.004 t (4.4136 U.S. tons) per engine.

Loading and Hauling System – Pass Match

	777	785	789	793
6030	3	4-5	6	7-8

i01329161

Equipment Lowering with Engine Stopped

SMCS Code: 7000

Before lowering any equipment with the engine stopped, clear the area around the equipment of all personnel. The procedure to use will vary with the type of equipment to be lowered. Keep in mind most systems use a high pressure fluid or air to raise or lower equipment. The procedure will cause high pressure air, hydraulic, or some other media to be released in order to lower the equipment. Wear appropriate personal protective equipment and follow the established procedure in the Operation and Maintenance Manual, “Equipment Lowering with Engine Stopped” in the Operation Section of the manual.

i07776654

Sound Information and Vibration Information

SMCS Code: 7000

Sound Level Information

The operator Equivalent Sound Pressure Level is 89 dB(A) when “ANSI/SAE J1166 Feb 2008” is used to measure the value for an enclosed cab. This is a work cycle sound exposure level. The cab was properly installed and maintained. The test was conducted with the cab doors and the cab windows closed.

Hearing protection may be needed when the machine is operated with an open operator station for extended periods or in a noisy environment. Hearing protection may be needed when the machine is operated with a cab that is not properly maintained or when the doors and windows are open for extended periods or in a noisy environment.

For Skid Steer Loader models 216B3, 226B3, 236B3, 242B3, and 252B3 the average exterior sound pressure level is 72 dB(A) when the “SAE J88Feb2006 - Constant Speed Moving Test” procedure is used to measure the value for the standard machine. The measurement was conducted under the following conditions: distance of 15 m (49.2 ft) and “the machine moving forward in an intermediate gear ratio”.

For Multi Terrain Loader and Compact Track Loader models 247B3, 257B3 and 259B3 the average exterior sound pressure level is 75 dB(A) when the “SAE J88Feb2006 - Constant Speed Moving Test” procedure is used to measure the value for the standard machine. The measurement was conducted under the following conditions: distance of 15 m (49.2 ft) and “the machine moving forward in an intermediate gear ratio”.

Sound Level Information for Machines in European Union Countries and in Countries that Adopt the “EU Directives”

The dynamic operator sound pressure level is 89 dB (A) when “ISO 6396:2008” is used to measure the value for an enclosed cab. The cab was properly installed and maintained. The test was conducted with the cab doors and the cab windows closed.

The average exterior sound power level for Skid Steer Loader models 216B3, 226B3, 236B3, and 242B3 is 101 dB(A) when the “ISO 6395 - Dynamic Test” procedure is used to measure the value for the standard machine.

The average exterior sound power level for Multi Terrain Loader and Compact Track Loader models 247B3, 257B3, and 259B3 is 103 dB(A) when the “ISO 6395 - Dynamic Test” procedure is used to measure the value for the standard machine.

Sound Level Information for Machines in Eurasian Economic Union Countries

The declared dynamic operator sound pressure level is 89 dB(A) when “ISO 6396:2008” is used to measure the value for an enclosed cab. The measurement was conducted at 70 % of the maximum engine cooling fan speed. The sound level may vary at different engine cooling fan speeds. The measurement was conducted with the cab doors and the cab windows closed.

The declared exterior sound power level (LWA) for Skid Steer Loader models 216B3, 226B3, 236B3, and 242B3 is 101 dB(A) when the value is measured according to the dynamic test procedures and the conditions that are specified in “ISO 6395:2008”. The measurement was conducted at 70 % of the maximum engine cooling fan speed. The sound level may vary at different engine cooling fan speeds.

THE SULLAIR 375

Made to suit any compressed air needs

The Sullair 375 Series is equal parts portability, durability and efficiency.

Made from high quality components, with Sullair's pioneering rotary screw technology, it's quiet to run, built to last and designed for easy accessibility when servicing is needed.



Total protection for your staff and business, with protective shut-down, emergency stop and standard 2-year Air End Warranty

Easily transportable, adjustable and serviceable – dependable air for out-of-the-way places

TECHNICAL SPECIFICATIONS

MODEL	MAX PRESSURE		CAPACITY - FREE AIR DELIVERY			MOTOR RATING		NOISE LEVEL DB(A)	DIMENSION	APPROX WEIGHT	AIR OUTLET DISCHARGE SIZE	Tyre SIZE (LOAD RANGE)
	PSI	BAR	L/s	M^3/Min	CFM	kW	HP		L x W x H (mm)	kg		
375A DPQ	125	8.6	177	10.6	375	87	117	76	3966 x 1960 x 1980	2005	1 x 2"; 3 x ¾	225/75D15
375A DLQ									2710 x 1506 x 1660	1894		
375H DPQ	150	10				97	130		3966 x 1960 x 1980	2005		
375H DLQ									2710 x 1506 x 1660	1903		
375HH DPQ	200	14				104	140		3966 x 1960 x 1980	2014		
375HH DLQ									2710 x 1506 x 1660	1903		

DLQ – No running gear. Provided with forklift slots
DPQ – Highway towable running gear, 2 wheels and enclosure

TH514D Telehandler

Hydraulic System

System Type	Load Sensing, Closed Center	
Pump Type	Variable Flow, Axial Piston	
Maximum Pump Capacity	140 L/min	36.9 gal/min
System Pressure	260 bar	3,770 psi
Auxiliary Hydraulic Pressure	240 bar	3,481 psi
Auxiliary Hydraulic Flow		
Boom Head – Intermittent	95 L/min	25 gal/min
Boom Head – Continuous	95 L/min	25 gal/min

Boom Performance

Boom Up	13.2 sec
Boom Down	11.8 sec
Tele Out	16.6 sec
Tele In	12.8 sec
Crowd Forward (Dump)	4 sec
Crowd Backward	3.9 sec
Combined	
Up and Out	29.8 sec
Down and In	24.6 sec

Axles

Front Axle	High bias, planetary reduction hubs with limited slip differential
Rear Axle	Open differential with planetary reduction hubs

Tires

Standard	Mitas 14.00-24 16PR Air
Options	Goodyear 14.00-24 16PR Air Goodyear 14.00-24 16PR Foam

Performance

Drawbar Pull	89.3 kN	20,075 lbf
Frame Leveling	±10	
Noise Levels		
In Cab	76 dB(A)	
External	106 dB(A)	
Off Road Towing Only	4990 kg	11,000 lb

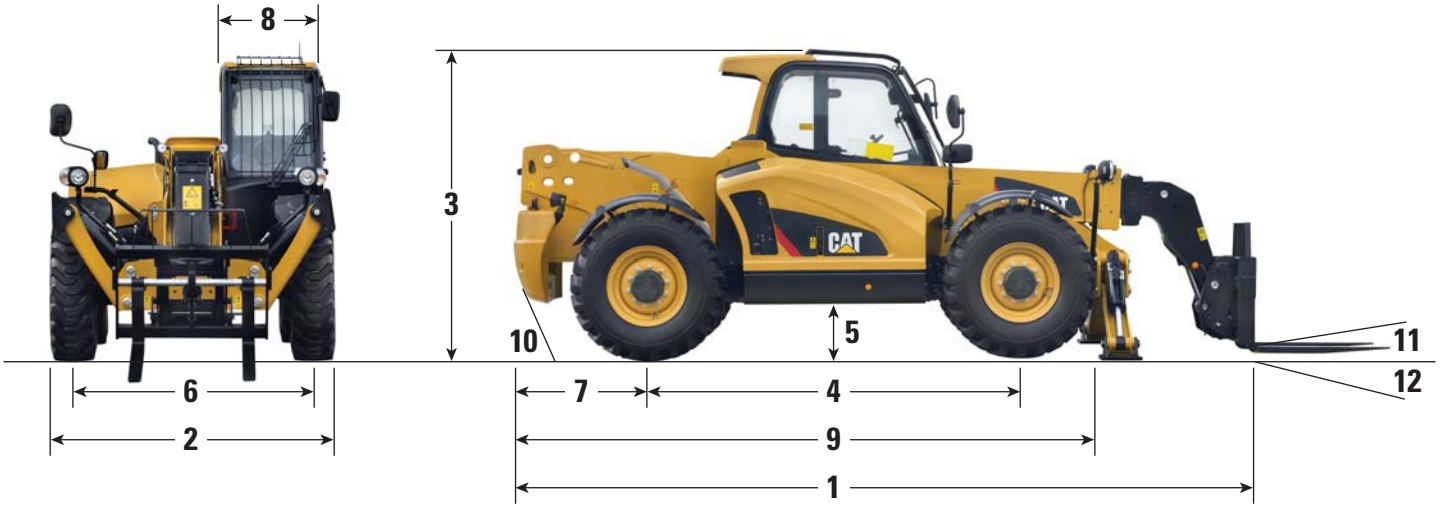

Dimensions (All dimensions are approximate.)

1	Overall Length to Front of Carriage	6465 mm	21.3 ft
2	Overall Width (standard tires)	2498 mm	8.2 ft
	Overall Width (stabilizers down)	3104 mm	10.2 ft
3	Overall Height (standard tires)*	2700 mm	8.8 ft
4	Wheelbase	3200 mm	10.5 ft
5	Ground Clearance	450 mm	1.5 ft
6	Track	2078 mm	6.8 ft
7	Overhang	1091 mm	3.6 ft
8	Cab Width	825 mm	2.7 ft
9	Machine Length	6465 mm	21.3 ft
10	Departure Angle	TBD	
11	Maximum Fork Crowd Angle	11°	
12	Maximum Fork Dump Angle	112°	

*Add 200 mm (7.9 in) for beacon.
Add 40 mm (1.6 in) for top guard.

TBD = To Be Determined

Technical data

GROUND-ENGAGING TELEHANDLER

		TH522
ENGINE	**UNIT**	
Make / Model		Perkins 404F-22T
Type		Turbo-charged, water-cooled, 4-cylinder diesel engine
Max. operating power at operating speed	**hp (kW) / rpm**	61 (44.7) / 2,800
Displacement	**in³ (cm³)**	135 (2,216)
Fuel tank capacity	**gal (l)**	18.5 (70)
Operating voltage	**V**	12
Battery	**A**	77
Alternator	**A**	85
Axle	**PAL**	1,530
PERFORMANCE	**UNIT**	
Drive speed	**mph (km/h)**	0 – 18.6 (0 – 30)
Speed stages		2
Drive system		Hydrostatic
Traction drive		Universal joint shaft
Total carriage rotation angle		144°
Total pivoting		16°
Steering angle (max.)		±40°
Lifting cylinder: raise / lower	**sec**	6.2 / 4.2
Extension cylinder: extend / retract	**sec**	5.1 / 2.5
Tipping cylinder: crowd / tilt	**sec**	3.1 / 2.2
HYDRAULICS	**UNIT**	
Operating pressure	**psi (bar)**	6,527 (450)
Aux hydraulic flow	**gal (l)/min**	18.4 (70)
Steering pressure	**psi (bar)**	3,263 (225)
Hydraulic oil tank capacity	**gal (l)**	14.5 (55)
CAPACITY	**UNIT**	
Max. load - forks	**lbs (kg)**	4,080 (1,850)
Max. load - bucket	**lbs (kg)**	3,200 (1,450)
NOISE LEVEL	**UNIT**	
Noise level (LwA)	**dB (A)**	103



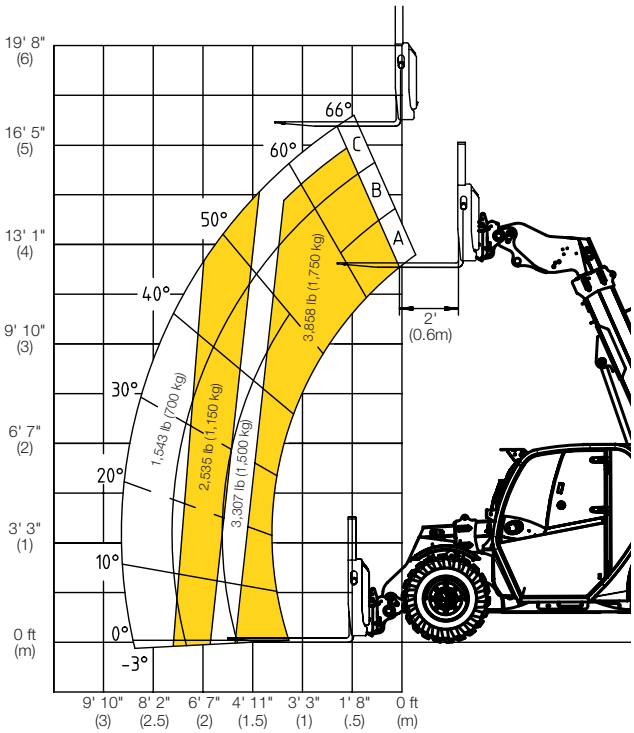

TIER 4 COMPLIANT

The story behind new emission requirements.

As part of the Clean Air Act, the U.S. Environmental Protection Agency (EPA) has adopted a comprehensive national program to reduce emissions (diesel particulate matter and nitrogen oxide) from off-road diesel engines. To meet these new emission standards, equipment manufacturers are using advanced engine and emission control technologies similar to those already used for highway diesel vehicles.

7.8 PROPANE FUEL SYSTEM PRESSURE RELIEF

⚠ CAUTION

THE PROPANE FUEL SYSTEM OPERATES AT PRESSURES UP TO 312 PSI (21.5 BAR). TO MINIMIZE THE RISK OF FIRE AND PERSONAL INJURY, RELIEVE THE PROPANE FUEL SYSTEM PRESSURE (WHERE APPLICABLE) BEFORE SERVICING THE PROPANE FUEL SYSTEM COMPONENTS.

To relieve propane fuel system pressure:

1. Close the manual shut-off valve on the propane fuel tank.
2. Start and run the vehicle until the engine stalls.
3. Turn the ignition switch OFF.

⚠ CAUTION

RESIDUAL VAPOR PRESSURE WILL BE PRESENT IN THE FUEL SYSTEM. ENSURE THE WORK AREA IS WELL VENTILATED BEFORE DISCONNECTING ANY FUEL LINE.

7.9 SUPPLEMENTAL INFORMATION ONLY APPLICABLE TO CE MACHINES

The following information is provided in accordance with the requirements of the European Machinery Directive 2006/42/EC.

The A-Weighted emission sound pressure level at the work platform is less than 70dB(A).

The guaranteed Sound Power Level (LWA) per European Directive 2000/14/EC (Noise Emission in the Environment by Equipment for Use Outdoors) based on test methods in accordance with Annex III, Part B, Method 1 and 0 of the directive, is 104 dB (A).

The vibration total value to which the hand-arm system is subjected does not exceed 2,5 m/s^2. The highest root mean square value of weighted acceleration to which the whole body is subjected does not exceed 0,5 m/s^2.

CH 450 LHR

Technical Data

Undercarriage		
Type	Variable gauge, telescoping side frames	
Track shoe width	600 mm / 23" ½	800 mm / 31" ½
Track shoe type	Triple grouser	
Overall width (retracted side frames)	2.550 mm / 8' 4" ½	2.950 mm / 9' 8" ¼
Overall width (extended side frames)	4.000 mm / 13' 1" ½	4.200 mm / 13' 9" ¼
Overall length	4.925 mm / 16' 2"	
Centre idler to centre sprocket	4.100 mm / 13' 5" ½	
Upperframe		
Width	2.550 mm / 8' 4" ½	
Operators' cabin	TOPS & FOPS-1 certified, 980 mm (3' 3") wide	
Control system type	CAN-BUS	
User interface	12" Touch Screen	
Tail swing radius	3.865 mm / 12' 8"	
Diesel engine	***High Tech* Line**	
Make and model	Cummins QSB6.7	
Emission certification	EU stage IV / US EPA Tier 4f	EU stage IIIA / US EPA Tier 3
Power rating	201 kW (270 HP) / 2000 rpm	
Fuel consumption rate (100% power, rated speed)	202 g/kWh - 0.332 lb/hp-hr	222 g/kWh - 0.365 lb/hp-hr
Average fuel consumption approx.	31,5 l/hr / 8.3 gal/hr	34,5 l/hr / 9.1 gal/hr
Fuel tank	500 l / 135 gal	
Sound pressure level in cabin (EN 16228-1, Annex B)	LP_A 82 dB (A)	
Sound power level (2000/14/EC - EN 16228-1, Annex B)	LW_A 108 dB (A)	
Hydraulic system		
Main pumps flow	2 x 214 l/min / 2 x 56.5 gal/min	
Third pump flow	160 l/min / 42.3 gal/min	
Main winch		
1st layer line pull	160 kN / 35,970 lbs	
1st layer rope speed	75 m/min / 246 ft/min	
Rope diameter	24 mm / 15/16"	
Rope layers	2	
Rotary head		
Max torque	190 kNm / 140,000 lb-ft at 33 MPa / 4,800 psi	
Max drilling speed	51 rpm	
Hydraulic power	155 kW / 208 hp	
Spin-off speed	125 rpm	
Service winch	**Controlled descent**	**Free fall**
1st layer line pull	72 kN / 16,200 lbs	
Rope diameter	18 mm / 11/16"	
Useful rope length with 1 / 2 /3 / 4 full layers	17 - 39 - 62 m 56' - 128' - 203'	13 - 31 - 51 - 73 m 42' 8" - 101' 8" - 167' 4" - 239' 6"
FEM classification	M5 - L2 - T5	M6 - L3 - T5

SPECIFICATIONS

ENGINE

Model ..... Komatsu SAA6D140E-5
Type ..... Common rail direct injection, water-cooled, turbocharged, after-cooled, cooled EGR diesel
Engine power
at rated engine speed ..... 1.900 rpm
ISO 14396 ..... 266 kW / 357 HP
ISO 9249 (net engine power) ..... 263 kW / 353 HP
Max. torque / engine speed ..... 1.875 Nm / 1.250 rpm
No. of cylinders 6
Bore × stroke ..... 140 × 165 mm
Displacement ..... 15,24 ltr
Fan drive type ..... Hydraulic
Lubricating system ..... Gear pump, water-cooled oil cooler, piston cooling nozzles
Filter ..... Main-flow filter with water separator
Air-filter type ..... Dry-air filter with automatic dust emission and preliminary purification including a dust display

TRANSMISSION

Type ..... Automatic powershift transmission
Torque converter ..... One-stage, double-phase, 3-element
Speeds in km/h (with 29.5 R25 tyres)

GEAR	1st	2nd	3rd	4th
Forwards	7,7	12,5	22,3	35
with torque converter lock-up	–	14	24	40
Reverse	8,6	13	25	37,5
with torque converter lock-up	–	16	26	43

CHASSIS AND TYRES

System ..... 4-wheel drive
Front axle ..... Komatsu HD axle, full-floating, (LSD-differential optional)
Rear axle ..... Komatsu HD axle, full-floating, 24° swing angle (LSD-differential optional)
Differential ..... Straight bevel gear pair
Final drive ..... Planetary gear in an oil bath
Tyres 29.5 R25

ENVIRONMENT

Engine emissions ..... Fully complies with EU Stage IIIA and EPA Tier III exhaust emission regulations
Noise levels
LwA external ..... 109 dB(A) (2000/14/EC Stage 2)
LpA operator ear ..... 77 dB(A) (ISO 6396 dynamic test)
Vibration levels (EN 12096:1997)*
Hand/arm ..... ≤ 2,5 m/s² (uncertainty K = 0,04 m/s²)
Body ..... ≤ 0,5 m/s² (uncertainty K = 0,28 m/s²)
* for the purpose of risk assessment under directive 2002/44/EC, please refer to ISO/TR 25398:2006.

BRAKES

Operating brakes ..... Hydraulically actuated, wet multi-disc brakes on all wheels
Parking brake ..... Wet-disc
Emergency brake ..... Uses the parking brake

HYDRAULIC SYSTEM

Type ..... Komatsu CLSS (Closed Centre Load Sensing System)
Hydraulic pump ..... Variable piston pump
Working pressure ..... 350 bar
Maximum pump flow ..... 321 ltr/min
No. of hydraulic/bucket cylinders 2/1
Type ..... Double-action
Bore diameter × stroke
Boom cylinder ..... 160 × 898 mm
Bucket cylinder ..... 185 × 675 mm
Hydraulic cycle with rated load bucket filling
Raise time ..... 7,2 s
Lowering time (empty) ..... 4,2 s
Dumping time ..... 1,7 s

STEERING SYSTEM

System ..... Articulated frame steering
Type ..... Completely hydraulic power steering
Steering angle to either side ..... 40°
Steering pump ..... Variable piston pump
Working pressure ..... 250 bar
Pumping capacity ..... 120 ltr/min
No. of steering cylinders 2
Type ..... Double-action
Bore diameter × stroke ..... 100 × 485 mm
Smallest turn (outer edge of the tyre 29.5 R25) ..... 6.870 mm

CABIN

Two-door SpaceCab™ in conformity with ISO 3471 with ROPS (roll over protective structure) in conformity with SAE J1040c and FOPS (falling object protective structure) in conformity with ISO 3449. The air-conditioned pressurised cabin is mounted upon hydrobearings and is noise dampened.

SERVICE REFILL CAPACITIES

Cooling system ..... 120 ltr
Fuel tank ..... 473 ltr
Engine oil ..... 45 ltr
Hydraulic system ..... 337 ltr
Front axle ..... 87 ltr
Rear axle ..... 81 ltr
Torque converter and transmission ..... 76 ltr

Technical Data

Service weight without attachments		
TWH 228	28.4 t–30.6 t	
Diesel engine		
	EU Stage V / US Tier 4	EU Stage IIIA / US Tier 3*
Manufacturer / model	Deutz 6.1 L6	Deutz TCD2012 L06 2V
Design	6-cylinder inline	6-cylinder inline
Functionality	4-cycle diesel, common rail direct injection, turbocharged with inter-cooler, controlled exhaust gas recirculation, diesel particulate filter with continuous regeneration and SCR catalytic converter	4-cycle diesel, common rail direct injection, turbocharged with intercooler
Engine power	129 kW	128 kW
Rated speed	2,000 rpm	2,000 rpm
Displacement	6.1 l	6.1 l
Cooling system	Water and charge air cooling with temperature controlled fan speed	Water and charge air cooling with temperature controlled fan speed
Exhaust emission standard	EU Stage V / US Tier 4	EU Stage IIIA / US Tier 3*
Fuel tank	337 l Diesel	337 l Diesel
DEF / Urea tank	32 l AdBlue	-
Electric Motor		
Power	110 kW	
Total connected load	143 kW	
Motor start	Via soft start	
Optional cable reel	Up to 50 metres (other lengths on request)	
Electrical system		
Alternator	28 V / 100 A	
Operating voltage	24 V	
Battery	2 × 12 V / 110 Ah / 750 A (in accordance with EN standards)	
Lighting system	2 × LED headlamps, turn indicators and tail lights	
Travel drive		
Hydrostatic travel drive via infinitely variable axial piston motor with directly mounted travel brake valve, two-speed manual gearshift, 4-wheel drive		
Travel speed 1st gear	5 kph	
Travel speed 2nd gear	18 kph	
Gradeability	max. 40%	
Turning radius	8.3 m	
Slewing drive		
Slewing ring	Internally geared, double-row ball turning ring	
Drive	2-stage planetary gear with integrated multi-disc brake	
Uppercarriage swing speed	0–7.5 rpm variable	
Slewing lock	Electrically operated	

Undercarriage		
Front axle	Rigid axle with integral drum brake, planetary drive	
Rear axle	Oscillating axle with integral drum brake and selectable oscillation lock, planetary drive	
Outriggers	4-point stabiliser system	
Tyres	10.00–20 solid rubber with intermediate rings	
Brakes		
Service brake	Hydraulic single-circuit braking system acting on all four wheel pairs	
Parking brake	Electrically operated disc brake on travel gearbox, acting on both front and rear axles	
Hydraulic system		
Pump delivery rate	max. 2 × 330 lpm	
Operating pressure	max. 320 / 360 bar	
Hydraulic oil tank	350 l	
Operator's cab		
Cab	Infinitely variable hydraulic height-adjustable cabin with sliding door. Reinforced steel structure, soundproofed, heat insulated panoramic windows for best all-round visibility, front window with roller blind, glass panel in the cabin roof with sliding blind. Heating and air conditioning, separate heat exchangers, fresh and recirculated air filters. Multifunction touch display, bottle holder, paper clip and multiple storage and mounting options. Digital radio (DAB+, USB, Bluetooth and hands-free), USB charging station 5V. Vertically adjustable cabin: viewing height of 5.6 m	
Air conditioning	Automatic air-conditioning. Infinitely variable heating with 8-speed fan, 10 adjustable air nozzles, 3 defroster nozzles.	
Operator's seat	Air-cushioned comfort seat with swinging armrests / joy-sticks, safety belt, lumbar support and headrest. Enables fatigue-free work due to universal adjustment options for the seat position, seat inclination and the arrangement of the seat cushion in relation to the armrests and joysticks.	
Monitoring	Ergonomically arranged, glare-free Multifunction display. Automatic monitoring and storage of deviating operating states (e.g. all hydraulic oil filters, hydraulic oil temperature, coolant and charge air temperature, diesel particulate filter loading, steering), visual and audible warning. Diagnostic option for the individual sensors via the multifunction display. Rear view and side view camera on the right with separate monitor.	
Noise level	Sound power level (ambience) L_{WA} 99.5 dB(A) (metered) acc. to directive 2000/14/EG L_{WA} 101 dB(A) (guaranteed) acc. to directive 2000/14/EG Sound pressure level (inside the cabin) acc. to standard ISO 6396 L_{pA} 75 dB(A)	Sound power level (ambience) L_{WA} 101.7 dB(A) (metered) acc. to directive 2000/14/EG L_{WA} 102 dB(A) (guaranteed) acc. to directive 2000/14/EG Sound pressure level (inside the cabin) acc. to standard ISO 6396 L_{pA} 70 dB(A)
Vibrations	Weighted r.m.s. value of acceleration of upper limbs under 2.5 m/s² (98 in/s²) Weighted effective value of acceleration for the seat and feet under 0.5 m/s² (20 in/s²)	
Certified in accordance with CE regulations		

Specification subject to change without notice.

* for low-regulated markets

Equipment

TWH 228

Engine	Standard	Option
Intercooler and coolant radiator	●	
Direct electronic fuel injection / common rail	●	
Advanced automatic idle incl. engine shut-off function	●	
Engine preheating		●
Engine diagnostics interface	●	
Temperature-dependent fan drive	●	
Undercarriage		
All-wheel drive	●	
Drum brakes	●	
Rear axle oscillating lock	●	
2-speed powershift transmission		●
4-point stabilisers	●	
Dozer blade in addition to 4-point stabilisers		●
Stabiliser cylinders with integrated two-way check valves	●	
Piston rod protection on stabiliser cylinders	●	
Tool box	●	
Special paint (customer paint work)		●
Solid rubber tyres (10.00-20) with intermediate rings	●	●
Uppercarriage		
Separate cooling system for engine and hydraulic oil cooler	●	
Cooling system with temperature-dependent fan drive	●	
Fan drive reversing function		●
Automatic central lubrication system	●	
Rear view camera	●	
Side view camera	●	
Travel alarm		●
Electric refuelling pump		●
Lighting protection		●
Special paint (customer paint work)		●

Cab	Standard	Option
Vertically adjustable cabin (max. viewing height of 5.6 m)	●	
Single-pane safety glass (ESG)	●	
Sliding window in cab door	●	
Cabin with penetration resistant glass front and top (classification P5A)		●
Windshield washer system	●	
Roof washer system		●
Air-cushioned operator seat with headrest, seatbelt, and lumbar support	●	
Seat heating		●
Joystick steering	●	
Steering column, height and tilt adjustable		●
Automatic air conditioning system	●	
Independent heating system		●
Multi-function display	●	
Document clip	●	
Roof guard grille (FOPS)		●
Cabin front and top guard		●
12 V transformer		●
Digital radio (DAB+, USB, Bluetooth and hands-free system)	●	
12 V socket		●
Fire extinguisher, dry powder with holder		●
Travel alarm with rotating beacon		●
Other equipment		
Close proximity range limiter for dipper stick	●	
Coolant and hydraulic oil level monitoring system	●	
Filter system for attachments		●
Rupture valves for lifting cylinders		●
Rupture valves for stick cylinders		●
Overload warning device		●
Quick coupling on dipper stick	●	
Dipper stick impact protection		●
Active cyclone prefilter (TOP AIR)		●
Hydraulic oil preheating		●
Lubrication of the grab suspension by central lubrication system	●	
Light packages LED		●
LED front headlights	●	
LED working lights cabin roof front	●	
Boom cylinder damping system (piston accumulator)		●
Fuchs Connect telematics system , incl. 5 years contract	●	

Further optional equipment available on request!
Specification subject to change without notice.

OPERATOR STATION

Safety canopy	FOPS (ISO3449) /ROPS (ISO3471)
Operation	Standing drilling, seated tramming
Sound pressure level according to EN791	Operator station: 100 db(A) Emitted: 127 db(A)
Seat	Ergonomic, adjustable for tramming including seat belt
Reversing alarm	Standard

LIGHTS

Front working lights	2 x 35W HID (24V)
Front driving lights	2 x 70 W (24V)
Rear driving lights	2 x 70 W (24V)
Amber strobe light	Flashing (24V)
Staircase light	Standard
Directional light**	Rear lights change according to tramming direction
Extra working light**	2 x 35W HID (24V)

PACKAGES

Regional packages**	LAM, AUS, USC, CIS
Harsh water packages**	Basic (see spec sheet TS2-049)
Antifreezing**	Block heater for engine Hydraulic oil tank heater Water circuit flushing Fuel filter heater

CARRIER

Carrier		NC4
Carrier type		Wheel mounted, frame steering
Frame steering		± 34°
Rear oscillation		± 10°
Ground clearance	250 mm	9.8 in
Diesel Engine		Deutz D914L04, 55kW. Tier 3
Transmission		Hydrostatic, automotive
Wheel motor		Hydraulic with combined brake
Tyres		300-15
Tyres*		Foam filled tyres
Service Brakes		Hydrostatic and positive braking
Parking and Emergency Brakes		Hydraulic oil immersed multiple disc brakes on wheel motors
Fuel tank		80 liters
Hydraulic jacks		Telescopic (front)
		Vertical (rear)
Brake release		Manual hand pump
Total weight Depending on option	Arround 13 000 kg	Arround 28660 lb
Fast filling systems**		Complete
Wheel chocks and holder**		2 pieces

EXTRA ITEMS

Spare rock drill**	
Spare wheel assembly**	Standard or foam filled
Special tools for rock drill**	
Documentation**	Extra manuals

*Alternative options features/components ** Additional options features/components

Cat® 330F L Hydraulic Excavator

Engine		
Engine Model	Cat C7.1 ACERT	
Gross Power – SAE J1995	178 kW	239 hp
Net Power – SAE J1349	175 kW	235 hp
Bore	105 mm	4.13 in
Stroke	135 mm	5.31 in
Displacement	7.01 L	428 in³
Engine (rating) RPM	1,800 rpm	
Engine (operation) RPM	1,750 rpm	

Hydraulic System		
Main System – Maximum Flow (total)	494 L/min	130 gal/min
Maximum Pressure – Equipment		
Heavy Lift	38 000 kPa	5,511 psi
Normal	35 000 kPa	5,076 psi
Maximum Pressure – Travel	37 000 kPa	5,366 psi
Maximum Pressure – Swing	27 400 kPa	3,974 psi
Pilot System – Maximum Flow	23 L/min	6.1 gal/min
Pilot System – Maximum Pressure	4100 kPa	595 psi

Drive		
Maximum Gradeability	35°/70%	
Maximum Travel Speed	5.1 km/h	3.2 mph
Maximum Drawbar Pull	247 kN	55,528 lbf

Machine Weights		
Minimum Operating Weight*	29 130 kg	64,220 lb
Maximum Operating Weight**	31 730 kg	69,950 lb

*6.15 m (20'2") Reach Boom, R2.65CB2 (8'8") Stick, 600 mm (24") TG Shoes, 5.8 mt (6.3 t) Counterweight, 1.76 m³ (2.30 yd³) GD Bucket.

**10.2 m (33'6") SLR Boom, 7.85 m (25'9") Stick, 800 mm (31") TG Shoes, 6.75 mt (7.4 t) Counterweight, 0.53 m³ (0.70 yd³) Bucket.

Swing		
Swing Speed	9.6 rpm	
Maximum Swing Torque	105 kN·m	77,350 lbf-ft

Sound Performance	
ISO 6396 – Operator Noise (closed)	72 dB(A)
ISO 6395 – Spectator Noise	104 dB(A)

Service Refill Capacities		
Fuel Tank Capacity	520 L	137.4 gal
Cooling System	30 L	7.9 gal
Engine Oil (with filter)	24 L	6.3 gal
Swing Drive (each)	9 L	2.3 gal
Final Drive (each)	6 L	1.6 gal
Hydraulic System (including tank)	310 L	81.9 gal
Hydraulic Tank	175 L	46.2 gal
DEF Tank	41 L	10.8 gal

Dimensions	Reach Boom 6.15 m (20'2")	
Stick	**R3.2CB2**	**10'6"**
Shipping Height*	3370 mm	11'1"
Shipping Length	10 390 mm	34'1"
Tail Swing Radius	3090 mm	10'2"
Length to Center of Rollers	3990 mm	13'1"
Track Length	4860 mm	15'11"
Ground Clearance	490 mm	1'7"
Track Gauge	2590 mm	8'6"
Transport Width	3290 mm	10'10"
600 mm (24") Shoes	3190 mm	10'6"
800 mm (31") Shoes	3390 mm	11'1"
Cab Height with Top Guard	3240 mm	10'8"
Counterweight Clearance**	1110 mm	3'8"

*Including shoe lug height.

**Without shoe lug height.

Working Ranges	Reach Boom 6.15 m (20'2")	
Stick	**R3.2CB2**	**10'6"**
Maximum Digging Depth	7250 mm	23'9"
Maximum Reach at Ground Level	10 680 mm	35'0"
Maximum Cutting Height	10 010 mm	32'10"
Maximum Loading Height	6950 mm	22'10"
Minimum Loading Height	2290 mm	7'6"
Maximum Depth Cut for 2440 mm (8'0") Level Bottom	7090 mm	23'3"
Maximum Vertical Wall Digging Depth	5980 mm	19'7"

For more complete information on Cat products, dealer services, and industry solutions, visit us on the web at **www.cat.com**

© 2017 Caterpillar
All rights reserved

Materials and specifications are subject to change without notice. Featured machines in photos may include additional equipment. See your Cat dealer for available options.

CAT, CATERPILLAR, SAFETY.CAT.COM, their respective logos, "Caterpillar Yellow" and the "Power Edge" trade dress, as well as corporate and product identity used herein, are trademarks of Caterpillar and may not be used without permission.

VisionLink is a trademark of Trimble Navigation Limited, registered in the United States and in other countries.

AEXQ1790-01
Replaces AEXQ1790
(ADSD-N/ANZ/S. Korea)

Vantage® 300 & 400

Chopper Technology®

Compacto, para varios procesos, excelente valor

LA INICIATIVA ECOLÓGICA DE LINCOLN
Cumple con los requisitos de emisiones de motor EPA Tier 4i
www.lincolnelectric.com/green

Los modelos Vantage® 300 & 400 silenciosos y compactos son la opción ideal para equipos de construcción, propietarios de instalaciones de tuberías y administradores de flotillas de alquiler. Seleccione su opción de motores diesel 1800 RPM de 4 cilindros comprobado.



Imagen: K2410-3 Vantage® 400

Imagen: K2409-3 Vantage® 300

- **Caja compacta** con gabinete de acero inoxidable.
- **Chopper Technology®** ofrece grandes inicios de arcos y un arco suave para revestimiento, TIG o soldadura de cables.
- **Soldadura de varios procesos** – Cinco modos de procesos, que incluyen:
  - Revestimiento CC (3/16 in /4.8 mm con Vantage® 300, 1/4 in /6.4 mm con Vantage® 400)
  - Tubería descendente (para revestimiento)
  - Touch Start TIG® DC
  - Cable CV (5/64 in /2.0 mm con Vantage® 300, 3/32 in /2.4 mm con Vantage® 400)
  - Corte con arco – Tamaños de carbono de hasta 1/4 in (6.4 mm) con Vantage® 300 y 5/16 in (8.0 mm) con Vantage® 400.
- **Potencia del generador de CA**
  Vantage® 300
  – pico de 12.5 kW (11 kW continuos) trifásico 240V CA
  – pico de 11.5 kW (10 kW continuos) monofásico 120/240 CA

  Vantage® 400
  – pico de 19 kW (17 kW continuos) trifásico de 240V AC
  – pico de 12 kW (11 kW continuos) monofásico 120/240V CA
- **De escaso ruido** – potencia de sonoridad a solo 99.1 dBA Lwa (74.8 dB a 23 ft/7 m) con Vantage® 400.

Procesos
- Revestimiento
- TIG
- MIG
- Con núcleo de fundente
- Corte

Salida CC CV | DC | 12.5 kW [1] | 19 kW [2] **Entrada** 1 Ø

EL paquete **Vantage® 300 Ready-Pak® incluye**
- Vantage® 300
- Remolque con Duo-Hitch®: Combo de sistema de sujeción tipo esfera/aro
- Kit de luces y guardabarros
- Estante para cables
- Conectores de cables (cantidad 2)
- Cable de electrodo 2/0, dos longitudes de 50 ft (15.3 m)
- Cable de electrodo 2/0, 10 ft (3.0 m)
- Cable de electrodo 2/0, 50 ft (15.3 m)
- Portaelectrodo 300A
- Abrazadera de trabajo 300A

EL paquete **Vantage® 400 Ready-Pak® incluye**
- Vantage® 400
- Remolque con Duo-Hitch®: Combo de sistema de sujeción tipo esfera/aro
- Kit de luces y guardabarros
- Estante para cables
- Conectores de cables (cantidad 2)
- Cable de electrodo 3/0, dos longitudes de 50 ft (15.3 m)
- Cable de electrodo 3/0, 10 ft (3 m)
- Cable de electrodo 3/0, 50 ft (15.3 m)
- Portaelectrodo 400A
- Abrazadera de trabajo 500A

Opciones clave
- Remolque de dos ruedas mediano con Duo-Hitch®K2636-1: Combo de sistema de sujeción tipo esfera/aro
- K2627-2 Control de salida remota c/120V CA, 100 ft. (30.5 m), capacidad 20A
- *Más opciones al final de la sección*

Bibliografía
E6.206 (Vantage® 300)
E6.210 (Vantage® 400)

[1] *Vantage® 300* [2] *Vantage® 400*

Nombre del producto	Número del producto	Salida evaluada Ciclo de corriente/voltaje/trabajo	Rango de salida	Motor	Cantidad de cilindros	HP a velocidad (rpm)	Alto x Ancho x Prof. in (mm)	Peso neto lbs. (kg)
Vantage® 300	K2409-3	300A/32V/100%	30-400A CC 350A/28V/100% 20-250A DC TIG 14-32V CV <u>Potencia trifásica de CA:</u> Pico de 12.5 kW , 11 kW continuos <u>Potencia monofásica de CA:</u> Pico de 11,5 kW , 10 kW continuos	Kubota® V1505 Diesel Tubería 40-300A	4 EPA Tier 4i	22 @ 1800	35,9 x 25,3 x 60,0 (913 x 642 x 1524) *Para la parte superior del tubo de escape: 44.3 (1124)*	1,035 (469)
Vantage® 300 One-Pak®	K2452-3							—
Vantage® 300 Ready-Pak®	K2453-3							
Vantage® 400	K2410-3	400A/36V/100%	30-500A CC 450A/32V/100% 20-250A DC TIG 14-36V CV <u>Potencia trifásica de CA:</u> Pico de 19 kW , 17 kW continuos <u>Potencia monofásica de CA:</u> Pico de 12 kW , 11 kW continuos	Perkins® 404D-22 Diesel Tubería 40-300A	4 EPA Tier 4i	32.7 @ 1800	35,9 x 25,3 x 60 (913 x 642 x 1524) *Para la parte superior del tubo de escape: 46.6 (1184)*	1,230 (559)
Vantage® 400 One-Pak®	K2508-3							—
Vantage® 400 Ready-Pak®	K2509-3							
Vantage® 400	K2711-1			Kubota® V2403M Diesel EPA Tier 4i		35.5 @ 1800		1,245 (565)
Vantage® 400 One-Pak®	K2717-3							—
Vantage® 400 Ready-Pak®	K2718-3							



Remote Control Bat. Capacity	0 h
Coding options	0
Recommended Battery Typ	0
Charging Time	0,00 h
Remote Control Range	0 m
ENVIRONMENT DATA	Metric
Operating temperature range	-7 - 45 °C
Sound level LpA (Standard)	EN 500-4
Sound power LWA, guaranteed	108,0 dB(A)
Storage temperature range	-7 - 45 °C
HAV summation (average value)	2,7 m/s2
Uncertainty in measurement HAV	0,5 m/s2
HAV summation (Standard)	EN 500-4
Sound level LpA	86,0 dB(A)
Sound power LWA (Standard)	EN 500-4
Sound power LWA, measured	107,0 dB(A)
MECHANICAL DETAILS	Metric

Technical specification

General data	
Materials	ROM material, i.e. minerals, ore, hard rock, limestone, gravel
Maximum feed size	2,400 mm edge length

Screen	
Type of screen	Linear Vibrating Grizzly
Screening area	4.2 m^2 – 16.2 m^2
No. of screen decks	Single deck
Available widths (W)	1.2 m – 3.6 m
Available length (L)	3.0 m – 5.6 m
Total height (H)	3.0 m – 4.2 m
Screen clothes	Grizzly bars or perforated plates
Inclination	Variable
Screen support	Rubber buffer, coil springs
Total weight	10,700 kg – 47,000 kg

Drive	
Drive concept	Unbalance exciter(s) mounted underneath the screen, driven by a motor via V-belt
Motor power	45 / 75 / 132 kW

Working principle

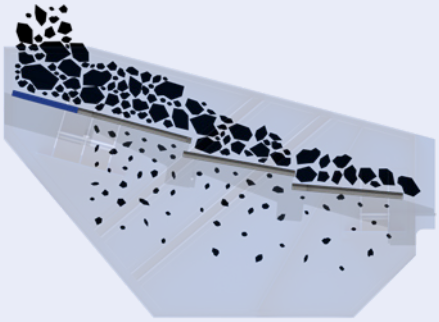

Main dimensions

Side view

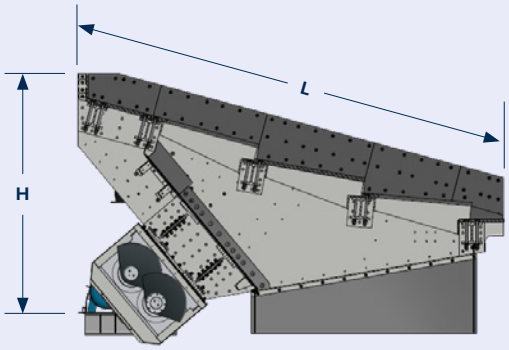

Top view

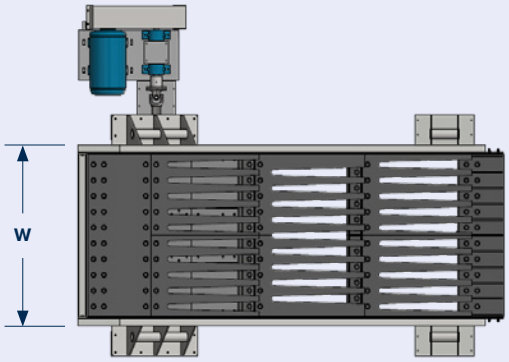

FLSmidth A/S
2500 Valby
Denmark
Tel. +45 3618 1000
info@flsmidth.com

www.flsmidth.com

FLSmidth Inc.
Salt Lake City Operations
Midvale, UT 84047-5559
USA
Tel. +1 801 871 7000
info.slc@flsmidth.com

FLSmidth Mining Technologies GmbH
Ennigerloh Operations
59320 Ennigerloh
Germany
Tel. +49 201 828 3000
mining-technologies@flsmidth.com

Copyright © 2023 FLSmidth A/S. All Rights Reserved. FLSmidth and FLS are (registered) trademarks of FLSmidth A/S. This brochure makes no offers, representations or warranties (express or implied), and information and data contained in this brochure are for general reference only and may change at any time.

Cat® 950 GC Wheel Loader

Engine

Engine Model	Cat C7.1 ACERT	
Max Power @ 1,700 rpm – SAE J1995	180 kW	241 hp
Max Power @ 1,700 rpm – ISO 14396	179 kW	240 hp
Max Power @ 1,700 rpm – ISO 14396 (metric)		243 hp
Max Net Power @ 1,700 rpm – SAE J1349	168 kW	225 hp
Max Net Power @ 1,700 rpm – ISO 9249	168 kW	225 hp
Max Net Power @ 1,700 rpm – ISO 9249 (metric)		228 hp
Peak Gross Torque (1,400 rpm) – SAE J1995	1099 N·m	811 lbf-ft
Peak Gross Torque (1,400 rpm) – ISO 14396	1092 N·m	805 lbf-ft
Bore	105 mm	4.13 in
Stroke	135 mm	5.31 in
Displacement	7.01 L	428 in³

- The air conditioning system on this machine contains the fluorinated greenhouse gas refrigerant R134a (Global Warming Potential = 1430). The system contains 1.9 kg (4.2 lb) of refrigerant which has a CO_2 equivalent of 2.717 metric tonnes (2.995 tons).

Weights and Operating Specifications

Operating Weight	18 849 kg	41,554 lb
Tipping Load – Full Turn		
ISO 14397-1*	11 006 kg	24,264 lb
Rigid Tires**	11 737 kg	25,875 lb
Breakout Force	154 kN	34,638 lbf

- For 3.1 m³ (4.0 yd³) general purpose buckets with BOCE. Weight based on a machine configuration with MAXAM MS302 23.5R25 L3 radial tires, full fluids, operator, standard counterweight, cold start, roading fenders, Product Link™, secondary steering, sound suppression.

*Full compliance to ISO (2007) 14397-1 Sections 1 thru 6, which requires 2% verification between calculations and testing.

**Compliance to ISO (2007) 14397-1 Sections 1 thru 5.

Sound

With Cooling Fan Speed at Maximum Value:	
Operator Sound Pressure Level (ISO 6396:2008)	73 dB(A)
Exterior Sound Power Level (ISO 6395:2008)	109 dB(A)
Exterior Sound Pressure Level (SAE J88:2013)	76 dB(A)*

*Distance of 15 m (49.2 ft), moving forward in second gear ratio.

With Cooling Fan Speed at 70% of Maximum Value:**	
Operator Sound Pressure Level (ISO 6396:2008)	73 dB(A)
Exterior Sound Power Level (ISO 6395:2008)	107 L_{WA}***

**For machines in European Union countries and in countries that adopt the "EU Directives."

***European Union Directive "2000/14/EC" as amended by "2005/88/EC."

Transmission

Forward 1	7.3 km/h	4.5 mph
Forward 2	12.8 km/h	8 mph
Forward 3	22.8 km/h	14.2 mph
Forward 4	36 km/h	22.4 mph
Reverse 1	7.3 km/h	4.5 mph
Reverse 2	12.8 km/h	8 mph
Reverse 3	22.8 km/h	14.2 mph

- Maximum travel speed in standard vehicle with empty bucket and standard L3 tires with 760 mm (30 in) roll radius.

Service Refill Capacities

Fuel Tank Size	290 L	76.6 gal
DEF Tank	16 L	4.2 gal
Cooling System	50 L	13.2 gal
Crankcase	18 L	4.8 gal
Transmission	45 L	11.9 gal
Differentials and Final Drives – Front	40 L	10.6 gal
Differentials and Final Drives – Rear	38 L	10 gal
Hydraulic Tank	112 L	29.6 gal

Hydraulic System

Steering System Pump Type	Piston	
Implement System		
Maximum Pump Output @ 2,390 rpm	256 L/min	68 gal/min
Maximum Operating Pressure @ 50 ± 1.5 L/min (13.2 + 0.4 gal/min)	27 900 kPa	4,047 psi
Hydraulic Cycle Time – Total Cycle Time	9.4 Seconds	

Dimensions

Height to Top of Hood	2673 mm	8'9"
Height to Top of Exhaust Pipe	3416 mm	11'2"
Height to Top of ROPS	3458 mm	11'4"
Ground Clearance	460 mm	1'6"
B-Pin Height	4188 mm	13'9"
Center Line of Rear Axle to Edge of Counterweight	2055 mm	6'9"
Wheelbase	3300 mm	10'10"
Center Line of Rear Axle to Hitch	1650 mm	5'5"
Rack Back @ Maximum Lift	60 degrees	
Rack Back @ Carry	45 degrees	
Rack Back @ Ground	40 degrees	
Lift Arm Clearance	3649 mm	12'0"

- All dimensions are approximate and based on MAXAM MS302 23.5R25 L3 radial tires.

For more complete information on Cat products, dealer services, and industry solutions, visit us on the web at **www.cat.com**

© 2017 Caterpillar
All rights reserved

Materials and specifications are subject to change without notice. Featured machines in photos may include additional equipment. See your Cat dealer for available options.

CAT, CATERPILLAR, SAFETY.CAT.COM, their respective logos, "Caterpillar Yellow" and the "Power Edge" trade dress, as well as corporate and product identity used herein, are trademarks of Caterpillar and may not be used without permission.

AEXQ1967-01 (02-2017)
Replaces AEXQ1967
(N Am, Eur)

Hydraulic System

Bucket/Work Tool System – Pump Output	270 L/min	71 gal/min
Steering System Pump Type	Piston	
Hydraulic Cycle Time – Raise	6.2 Seconds	
Hydraulic Cycle Time – Dump	2.0 Seconds	
Hydraulic Cycle Time – Lower	2.5 Seconds	
Hydraulic Cycle Time – Float	2.5 Seconds	
Hydraulic Cycle Time – Rack	2.7 Seconds	

- Implement System (Standard), Piston Pump – Rated at 2,100 rpm and 6900 kPa (1,000 psi).
- Cycle time with rated payload

Brakes

Brakes	Meets required standards.

- Meet ISO 3450-1985 standards.

Axles

Front	Fixed front	
Rear	Oscillating ± 13°	
Maximum Single-Wheel Rise and Fall	470 mm	18.5 in

Tires

Tires	Choose from a variety of tires to match your application.

- Choice of:
  23.5R25 VSW BS L2 Radial
  23.5R25 VUT D2A BS L2 Radial
  23.5R25 XTLA MX L2 Radial
  23.5R25 VMT BS L3 Radial
  23.5R25 XHA MX L3 Radial
  23.5R25 XMINE MX L5 Radial
  750/65R25 XLD MX L3 Radial
  23.5-25 SGGL FS L2 Bias
  Flexport
- NOTE: In certain applications (such as load and carry) the loader's productive capabilities might exceed the tires' tonnes-km/h (ton-mph) capabilities. Caterpillar recommends that you consult a tire supplier to evaluate all conditions before selecting a tire model. The 23.5-25 size range and other special tires are available on request.

Cab

ROPS/FOPS	Meets SAE and ISO standards.

- Caterpillar cab with integrated Rollover Protective Structure (ROPS) are standard.
- ROPS meets SAE J1040 APR88 and ISO 3471:1994 criteria.
- Falling Objects Protective Structure (FOPS) meets SAE J231 JAN81 and ISO 3449:2005 version.

Sound

- The sound values indicated below are for specific operating conditions only. Machine and operator sound levels will vary at different engine and/or cooling fan speeds. The cab was properly installed and maintained. The tests were conducted with the cab doors and the cab windows closed. Hearing protection may be needed when the machine is operated with a cabin that is not properly maintained, or when the doors and/or windows are open for extended periods or in a noisy environment.
- The declared dynamic operator Sound Pressure Level for a standard machine configuration, measured according to the procedures specified in "ISO 6396:2008," is 72 dB(A) with the cooling fan speed set at maximum value.
- The declared average exterior sound pressure level for a standard machine configuration, measured according to the procedures specified in "SAE J88:2006 – Constant Speed Moving Test," is 75 dB(A). The measurement was conducted under the following conditions: distance of 15 m (49.2 ft), moving forward in an intermediate gear ratio, static hydraulic cycle (with no payload) and with the cooling fan speed set at maximum value.
- The declared exterior sound power level for a standard machine configuration, measured according to the procedures specified in "ISO 6395:2008," is 111 dB(A) with the cooling fan speed set at maximum value.

Sound Level Information for Machines in Countries that Adopt the "EU Directives"

- The declared dynamic operator sound pressure level for a standard machine configuration, measured according to the procedures specified in "ISO 6396:2008," is 69 dB(A) with a cooling fan speed set at 70 percent of the maximum value.
- The declared sound power level that is labeled on the machine is 106 LWA. The measurement of the sound power level was made according to the test procedures and conditions that are specified in the European Union Directive "2000/14/EC" as amended by "2005/88/EC."

Service Refill Capacities

Fuel Tank – Standard	264 L	70 gal
Cooling System	42 L	11 gal
Crankcase	30 L	7.9 gal
Transmission	34 L	9 gal
Differentials and Final Drives – Front	36 L	9.5 gal
Differentials and Final Drives – Rear	36 L	9.5 gal
Hydraulic Tank	110 L	29 gal

Appendix E

Non-Contributing Noise Sources

Table E : List of Non-Contributing Noise Sources

April-2025

Great Bear Project
Red Lake, ON

Source Description	Reason/Rational
Emergency vehicles and equipment	Police vehicles, public services vehicles, etc, all type of vehicles which duration is relative short. Duration and Emergency events are difficult to predict.
Alarms, warning sounds, back-up sirens, etc	Sporadic and normally short in time duration compared to larger machinery noises
Wash bay, Small Buildings, Acitivities in the Service and Admin Areas	These sources are located very close to the Process Plant area which gathers the main noise sources of the Project
Tailings Thickener Area and Water Treatment Plant	Low noise sources that will be enclosed in a building
Fan/Pipe Handler	Used >90% of the time as part of the underground fleet

Appendix F

Key Model Parameters and Sample Calculations

Receiver	
Name:	RPOR1
ID:	!0A!POR_1
X:	456965.31 m
Y:	5639222.68 m
Z:	372.01 m

Point Source, ISO 9613, Name: "VentilationFan_HingeLimb_FAR2", ID: "!090800!VF_HL_FAR2"																					
Nr.	X	Y	Z	Refl.	DEN	Freq.		Lw	I/a	Optime	K0	Di	Adiv	Aatm	Agr	Afol	Ahous	Abar	Cmet	RL	Lr
	(m)	(m)	(m)			(Hz)		dB(A)	dB	dB	(dB)	(dB)	(dB)	(dB)	(dB)	(dB)	(dB)	(dB)	(dB)	(dB)	dB(A)
2	456757.36	5633595.42	359	0	DEN	A		129.7	0	0	0	0	86	14.8	3.6	0	0	2.2	0	0	22.9

Point Source, ISO 9613, Name: "VentilationFan_HingeLimb_FAR2", ID: "!090800!VF_HL_FAR2"																					
Nr.	X	Y	Z	Refl.	DEN	Freq.		Lw	I/a	Optime	K0	Di	Adiv	Aatm	Agr	Afol	Ahous	Abar	Cmet	RL	Lr
	(m)	(m)	(m)			(Hz)		dB(A)	dB	dB	(dB)	(dB)	(dB)	(dB)	(dB)	(dB)	(dB)	(dB)	(dB)	(dB)	dB(A)
4	456756.4	5633595.3	359.01	0	DEN	A		129.7	0	0	0	0	86	14.8	3.6	0	0	2.2	0	0	22.9

Point Source, ISO 9613, Name: "VentilationFan_AEX", ID: "!090A0602!VentFan_aex"																					
Nr.	X	Y	Z	Refl.	DEN	Freq.		Lw	I/a	Optime	K0	Di	Adiv	Aatm	Agr	Afol	Ahous	Abar	Cmet	RL	Lr
	(m)	(m)	(m)			(Hz)		dB(A)	dB	dB	(dB)	(dB)	(dB)	(dB)	(dB)	(dB)	(dB)	(dB)	(dB)	(dB)	dB(A)
5	455504.36	5634507.08	380.08	0	DEN	A		128.5	0	0	0	0	84.9	13.7	2.9	0	0	9.3	0	0	17.7

Point Source, ISO 9613, Name: "5 MW NaturalGasPower Casing - Power Plant", ID: "!040100!Pwr5MW_c"																					
Nr.	X	Y	Z	Refl.	DEN	Freq.		Lw	I/a	Optime	K0	Di	Adiv	Aatm	Agr	Afol	Ahous	Abar	Cmet	RL	Lr
	(m)	(m)	(m)			(Hz)		dB(A)	dB	dB	(dB)	(dB)	(dB)	(dB)	(dB)	(dB)	(dB)	(dB)	(dB)	(dB)	dB(A)
6	457002.54	5636633.94	406.49	0	DEN	A		117	0	0	0	0	79.3	11.7	3	0	0	2.6	0	0	20.4

Point Source, ISO 9613, Name: "5 MW NaturalGasPower Casing - Power Plant", ID: "!040100!Pwr5MW_c"																					
Nr.	X	Y	Z	Refl.	DEN	Freq.		Lw	I/a	Optime	K0	Di	Adiv	Aatm	Agr	Afol	Ahous	Abar	Cmet	RL	Lr
	(m)	(m)	(m)			(Hz)		dB(A)	dB	dB	(dB)	(dB)	(dB)	(dB)	(dB)	(dB)	(dB)	(dB)	(dB)	(dB)	dB(A)
7	457007.01	5636628.82	406.33	0	DEN	A		117	0	0	0	0	79.3	11.7	2.8	0	0	2.7	0	0	20.5

Point Source, ISO 9613, Name: "5 MW NaturalGasPower Casing - Power Plant", ID: "!040100!Pwr5MW_c"																					
Nr.	X	Y	Z	Refl.	DEN	Freq.		Lw	I/a	Optime	K0	Di	Adiv	Aatm	Agr	Afol	Ahous	Abar	Cmet	RL	Lr
	(m)	(m)	(m)			(Hz)		dB(A)	dB	dB	(dB)	(dB)	(dB)	(dB)	(dB)	(dB)	(dB)	(dB)	(dB)	(dB)	dB(A)
8	457011.52	5636622.42	406.15	0	DEN	A		117	0	0	0	0	79.3	11.7	2.7	0	0	2.7	0	0	20.5

Point Source, ISO 9613, Name: "5 MW NaturalGasPower Casing - Power Plant", ID: "!040000!Pwr5MW_c"																					
Nr.	X	Y	Z	Refl.	DEN	Freq.		Lw	I/a	Optime	K0	Di	Adiv	Aatm	Agr	Afol	Ahous	Abar	Cmet	RL	Lr
	(m)	(m)	(m)			(Hz)		dB(A)	dB	dB	(dB)	(dB)	(dB)	(dB)	(dB)	(dB)	(dB)	(dB)	(dB)	(dB)	dB(A)
9	457016.13	5636616.03	405.97	0	DEN	A		117	0	0	0	0	79.3	11.7	2.7	0	0	2.7	0	0	20.5

Point Source, ISO 9613, Name: "5 MW NaturalGasPower Casing - Power Plant", ID: "!040000!Pwr5MW_c"																					
Nr.	X	Y	Z	Refl.	DEN	Freq.		Lw	I/a	Optime	K0	Di	Adiv	Aatm	Agr	Afol	Ahous	Abar	Cmet	RL	Lr
	(m)	(m)	(m)			(Hz)		dB(A)	dB	dB	(dB)	(dB)	(dB)	(dB)	(dB)	(dB)	(dB)	(dB)	(dB)	(dB)	dB(A)
10	457020.74	5636610.3	405.81	0	DEN	A		117	0	0	0	0	79.3	11.8	2.8	0	0	2.7	0	0	20.5

Point Source, ISO 9613, Name: "5 MW NaturalGasPower Casing - Power Plant", ID: "!040000!Pwr5MW_c"																					
Nr.	X	Y	Z	Refl.	DEN	Freq.		Lw	I/a	Optime	K0	Di	Adiv	Aatm	Agr	Afol	Ahous	Abar	Cmet	RL	Lr
	(m)	(m)	(m)			(Hz)		dB(A)	dB	dB	(dB)	(dB)	(dB)	(dB)	(dB)	(dB)	(dB)	(dB)	(dB)	(dB)	dB(A)
12	457024.88	5636604	405.63	0	DEN	A		117	0	0	0	0	79.4	11.8	2.8	0	0	2.7	0	0	20.4

Point Source, ISO 9613, Name: "5 MW NaturalGasPower Casing - Power Plant", ID: "!040000!Pwr5MW_c"																					
Nr.	X	Y	Z	Refl.	DEN	Freq.		Lw	I/a	Optime	K0	Di	Adiv	Aatm	Agr	Afol	Ahous	Abar	Cmet	RL	Lr
	(m)	(m)	(m)			(Hz)		dB(A)	dB	dB	(dB)	(dB)	(dB)	(dB)	(dB)	(dB)	(dB)	(dB)	(dB)	(dB)	dB(A)
14	457028.17	5636598.17	405.48	0	DEN	A		117	0	0	0	0	79.4	11.8	2.8	0	0	2.7	0	0	20.4

Point Source, ISO 9613, Name: "5 MW NaturalGasPower Casing - Power Plant", ID: "!040000!Pwr5MW_c"																					
Nr.	X	Y	Z	Refl.	DEN	Freq.		Lw	I/a	Optime	K0	Di	Adiv	Aatm	Agr	Afol	Ahous	Abar	Cmet	RL	Lr
	(m)	(m)	(m)			(Hz)		dB(A)	dB	dB	(dB)	(dB)	(dB)	(dB)	(dB)	(dB)	(dB)	(dB)	(dB)	(dB)	dB(A)
15	457032.02	5636593.28	405.34	0	DEN	A		117	0	0	0	0	79.4	11.8	2.8	0	0	2.7	0	0	20.4

Point Source, ISO 9613, Name: "5 MW NaturalGasPower Casing - Power Plant", ID: "!040000!Pwr5MW_c"																					
Nr.	X	Y	Z	Refl.	DEN	Freq.		Lw	I/a	Optime	K0	Di	Adiv	Aatm	Agr	Afol	Ahous	Abar	Cmet	RL	Lr
	(m)	(m)	(m)			(Hz)		dB(A)	dB	dB	(dB)	(dB)	(dB)	(dB)	(dB)	(dB)	(dB)	(dB)	(dB)	(dB)	dB(A)
16	457034.84	5636589.52	405.23	0	DEN	A		117	0	0	0	0	79.4	11.8	2.8	0	0	2.8	0	0	20.3

Point Source, ISO 9613, Name: "FrontLoaderCAT993_02_pp", ID: "!09080101!FLoader_02_pp"																					
Nr.	X	Y	Z	Refl.	DEN	Freq.		Lw	I/a	Optime	K0	Di	Adiv	Aatm	Agr	Afol	Ahous	Abar	Cmet	RL	Lr
	(m)	(m)	(m)			(Hz)		dB(A)	dB	dB	(dB)	(dB)	(dB)	(dB)	(dB)	(dB)	(dB)	(dB)	(dB)	(dB)	dB(A)
18	456570.22	5635589.78	452.5	0	23	A		116	0	-1.9	0	0	82.3	4.8	3.6	0	0	1.7	0	0	21.8

Point Source, ISO 9613, Name: "VentilationFan_LP_RAR1", ID: "!070101!VF_LP_RAR1"																					
Nr.	X	Y	Z	Refl.	DEN	Freq.		Lw	I/a	Optime	K0	Di	Adiv	Aatm	Agr	Afol	Ahous	Abar	Cmet	RL	Lr
	(m)	(m)	(m)			(Hz)		dB(A)	dB	dB	(dB)	(dB)	(dB)	(dB)	(dB)	(dB)	(dB)	(dB)	(dB)	(dB)	dB(A)
19	456411.08	5634335.15	364.79	0	DEN	A		116.4	0	0	0	0	84.8	13.7	3.3	0	0	2.5	0	0	12.1

Point Source, ISO 9613, Name: "VentilationFan_LP_RAR1", ID: "!070101!VF_LP_RAR1"																					
Nr.	X	Y	Z	Refl.	DEN	Freq.		Lw	l/a	Optime	K0	Di	Adiv	Aatm	Agr	Afol	Ahous	Abar	Cmet	RL	Lr
	(m)	(m)	(m)			(Hz)		dB(A)	dB	dB	(dB)	(dB)	(dB)	(dB)	(dB)	(dB)	(dB)	(dB)	(dB)	(dB)	dB(A)
21	456412	5634335	364.74	0	DEN	A		116.4	0	0	0	0	84.8	13.7	3.3	0	0	2.5	0	0	12.1

Line Source, ISO 9613, Name: "UGR23 AEXPortal to PAG Stockpile", ID: "!090804!HA777_UGR23"																					
Nr.	X	Y	Z	Refl.	DEN	Freq.		Lw	l/a	Optime	K0	Di	Adiv	Aatm	Agr	Afol	Ahous	Abar	Cmet	RL	Lr
	(m)	(m)	(m)			(Hz)		dB(A)	dB	dB	(dB)	(dB)	(dB)	(dB)	(dB)	(dB)	(dB)	(dB)	(dB)	(dB)	dB(A)
22	457345.24	5636215.54	513.5	0	DEN	A		93.7	18.4	0	0	0	80.6	4.5	3.1	0	0	1.5	0	0	22.3
31	457751.05	5634955.33	393.5	0	DEN	A		93.7	19.7	0	0	0	83.7	5.9	3.1	0	0	1.6	0	0	19
32	457321.91	5636165.92	513.5	0	DEN	A		93.7	16.1	0	0	0	80.8	4.6	3.1	0	0	1.6	0	0	19.6
35	457401.68	5635766.11	441.29	0	DEN	A		93.7	16.4	0	0	0	81.8	5	3.1	0	0	3.6	0	0	16.5
57	457393.6	5635662.94	430.83	0	DEN	A		93.7	15.9	0	0	0	82.1	5.2	3.1	0	0	2.6	0	0	16.6
62	457561.97	5634882.34	393.5	0	DEN	A		93.7	17.1	0	0	0	83.8	6	3.1	0	0	1.6	0	0	16.2
67	457307.81	5636135.94	513.5	0	DEN	A		93.7	14.1	0	0	0	80.9	4.6	3.1	0	0	1.6	0	0	17.5
69	457495.92	5635941.15	462.12	0	DEN	A		93.7	14.4	0	0	0	81.4	4.9	3.1	0	0	5	0	0	13.6
81	458038.96	5635285.18	413.5	0	DEN	A		93.7	15.4	0	0	0	83.2	5.7	3.3	0	0	1.4	0	0	15.4
88	457298.31	5636115.72	513.5	0	DEN	A		93.7	12.8	0	0	0	80.9	4.7	3.1	0	0	1.6	0	0	16.1
89	457465.26	5634859.51	386.64	0	DEN	A		93.7	15.7	0	0	0	83.9	6	3.2	0	0	1.6	0	0	14.8
97	457419.93	5635820.05	447.14	0	DEN	A		93.7	13.5	0	0	0	81.7	5	3.1	0	0	4.2	0	0	13.1
99	457462.12	5635904.85	456.94	0	DEN	A		93.7	13.2	0	0	0	81.5	4.9	3.1	0	0	5	0	0	12.3
106	457293.16	5634781.78	370.39	0	DEN	A		93.7	15.3	0	0	0	84	6	3.2	0	0	1.5	0	0	14.2
108	457394.1	5635700.98	434.63	0	DEN	A		93.7	13.4	0	0	0	82	5.1	3.1	0	0	2.9	0	0	13.9
112	457890.56	5635080.2	403.5	0	DEN	A		93.7	14.9	0	0	0	83.6	5.8	3.3	0	0	1.7	0	0	14.2
121	457394.5	5635731.87	437.74	0	DEN	A		93.7	13.2	0	0	0	81.9	5.1	3.1	0	0	3.2	0	0	13.5
131	458043.49	5635315.07	413.5	0	DEN	A		93.7	14.1	0	0	0	83.2	5.6	3.3	0	0	1.4	0	0	14.2
139	457559.64	5636003.46	470.89	0	DEN	A		93.7	12.1	0	0	0	81.3	4.8	3.1	0	0	3.4	0	0	13.1
140	457319.18	5635272.91	392.33	0	DEN	A		93.7	13.8	0	0	0	83	5.6	3.1	0	0	1.8	0	0	14.1
143	457523.37	5635966.19	465.81	0	DEN	A		93.7	12.2	0	0	0	81.4	4.8	3.1	0	0	4.5	0	0	11.9
147	457366.84	5636261.48	513.5	0	DEN	A		93.7	11.3	0	0	0	80.5	4.5	3.1	0	0	0.5	0	0	16.3
149	457517.57	5634876.42	392.1	0	DEN	A		93.7	14.5	0	0	0	83.8	6	3.2	0	0	1.6	0	0	13.6
150	457517.49	5636266.7	499.43	0	DEN	A		93.7	11.2	0	0	0	80.6	4.5	3.1	0	0	1.6	0	0	15.1
155	457528.82	5636260.07	498.23	0	DEN	A		93.7	11.2	0	0	0	80.6	4.5	3.1	0	0	1.6	0	0	15
158	457352.46	5635353.52	400.72	0	DEN	A		93.7	13.4	0	0	0	82.8	5.5	3.1	0	0	1.8	0	0	13.9
159	458011.4	5635221.94	412.29	0	DEN	A		93.7	13.9	0	0	0	83.3	5.7	3.3	0	0	1.5	0	0	13.7
162	457597.49	5636083.24	478.68	0	DEN	A		93.7	11.6	0	0	0	81.1	4.7	3.2	0	0	1.7	0	0	14.5
164	457552.99	5636245.93	495.74	0	DEN	A		93.7	11.2	0	0	0	80.6	4.6	3.2	0	0	1.6	0	0	14.9
167	457912.44	5635097.79	403.5	0	DEN	A		93.7	14	0	0	0	83.5	5.8	3.3	0	0	1.6	0	0	13.4
170	457387.28	5635519.89	416.93	0	DEN	A		93.7	12.7	0	0	0	82.4	5.3	3.1	0	0	2	0	0	13.6
172	457452.7	5636283.87	505.73	0	DEN	A		93.7	10.8	0	0	0	80.5	4.5	3.1	0	0	0.6	0	0	15.8
173	457425.57	5634843.96	382.15	0	DEN	A		93.7	14.2	0	0	0	83.9	6	3.2	0	0	1.6	0	0	13.2
175	457591.42	5636070.44	477.41	0	DEN	A		93.7	11.4	0	0	0	81.1	4.8	3.2	0	0	1.9	0	0	14.1
177	457581.09	5636048.66	475.3	0	DEN	A		93.7	11.5	0	0	0	81.2	4.8	3.2	0	0	3.1	0	0	12.9
179	457376.2	5636271.46	512.74	0	DEN	A		93.7	10.8	0	0	0	80.5	4.5	3.1	0	0	0.5	0	0	15.8
183	457858.66	5635051.65	402.32	0	DEN	A		93.7	13.8	0	0	0	83.6	5.9	3.3	0	0	1.5	0	0	13.3
187	457534.64	5635976.47	467.31	0	DEN	A		93.7	11.5	0	0	0	81.4	4.8	3.1	0	0	4.3	0	0	11.6
188	457344.93	5635334.22	398.7	0	DEN	A		93.7	13	0	0	0	82.8	5.5	3.1	0	0	1.8	0	0	13.4
190	457393.24	5635635.3	428.14	0	DEN	A		93.7	12.2	0	0	0	82.2	5.2	3.1	0	0	2.4	0	0	13
196	457390.54	5635579.57	422.66	0	DEN	A		93.7	12.3	0	0	0	82.3	5.2	3.1	0	0	2.1	0	0	13.2
198	457435.05	5635856.97	451.32	0	DEN	A		93.7	11.6	0	0	0	81.6	5	3.1	0	0	4.6	0	0	10.9
200	457482.68	5636281.41	502.96	0	DEN	A		93.7	10.5	0	0	0	80.5	4.5	3.1	0	0	1	0	0	15
202	457310.29	5635253.08	390.22	0	DEN	A		93.7	12.9	0	0	0	83	5.6	3.1	0	0	1.8	0	0	13.1
204	457384.05	5635460.83	411.38	0	DEN	A		93.7	12.5	0	0	0	82.6	5.4	3.1	0	0	1.9	0	0	13.2
205	457838.26	5635033.39	399.61	0	DEN	A		93.7	13.5	0	0	0	83.6	5.9	3.2	0	0	1.5	0	0	12.9
207	458030.06	5635255.53	413.5	0	DEN	A		93.7	13.1	0	0	0	83.3	5.7	3.3	0	0	1.4	0	0	13
224	457562.48	5636238.92	494.64	0	DEN	A		93.7	10.3	0	0	0	80.7	4.6	3.2	0	0	1.5	0	0	14
227	457359.54	5635371.67	402.64	0	DEN	A		93.7	12.4	0	0	0	82.8	5.5	3.1	0	0	1.8	0	0	12.9
240	457386.5	5636275.07	511.75	0	DEN	A		93.7	10	0	0	0	80.5	4.5	3.1	0	0	0.5	0	0	15.1
244	457678.38	5634912.75	393.5	0	DEN	A		93.7	13.3	0	0	0	83.8	6	3.1	0	0	1.6	0	0	12.4
249	457388.2	5635536.83	418.53	0	DEN	A		93.7	11.8	0	0	0	82.4	5.3	3.1	0	0	2	0	0	12.7
251	458000.33	5635202	410.11	0	DEN	A		93.7	12.8	0	0	0	83.4	5.7	3.3	0	0	1.5	0	0	12.6
257	457338.31	5635317.27	396.95	0	DEN	A		93.7	12.2	0	0	0	82.9	5.5	3.1	0	0	1.8	0	0	12.6
259	457409.84	5636283.24	509.55	0	DEN	A		93.7	9.8	0	0	0	80.5	4.5	3.1	0	0	0.5	0	0	14.9
262	457270.47	5635173.21	381.84	0	DEN	A		93.7	12.4	0	0	0	83.2	5.7	3.1	0	0	1.8	0	0	12.4
265	457544.09	5635985.09	468.56	0	DEN	A		93.7	10.6	0	0	0	81.3	4.8	3.1	0	0	4	0	0	11
266	457386.36	5635503.2	415.34	0	DEN	A		93.7	11.7	0	0	0	82.5	5.3	3.1	0	0	1.9	0	0	12.5
271	457392.77	5635620.35	426.68	0	DEN	A		93.7	11.3	0	0	0	82.2	5.2	3.1	0	0	2.3	0	0	12.1
275	457434.79	5636285.34	507.37	0	DEN	A		93.7	9.5	0	0	0	80.5	4.5	3.1	0	0	0.5	0	0	14.6
279	457295.45	5635220.01	386.79	0	DEN	A		93.7	12	0	0	0	83.1	5.6	3.1	0	0	1.8	0	0	12.1
282	457607.81	5636121.76	482.45	0	DEN	A		93.7	10	0	0	0	81	4.7	3.3	0	0	1.5	0	0	13.2
283	457469.07	5636282.53	504.24	0	DEN	A		93.7	9.5	0	0	0	80.5	4.5	3.1	0	0	0.9	0	0	14.1
286	457586.26	5636059.57	476.35	0	DEN	A		93.7	10.1	0	0	0	81.2	4.8	3.2	0	0	2.3	0	0	12.4
287	457706.99	5634921.25	393.5	0	DEN	A		93.7	12.7	0	0	0	83.8	6	3.1	0	0	1.6	0	0	11.8
288	457806.42	5635004.89	394.95	0	DEN	A		93.7	12.6	0	0	0	83.7	5.9	3.2	0	0	1.6	0	0	11.9
308	457569.43	5636024.1	473.03	0	DEN	A		93.7	10	0	0	0	81.3	4.8	3.1	0	0	2.6	0	0	11.8

313	457389.74	5635564.88	421.21	0	DEN	A		93.7	11	0	0	0	82.3	5.3	3.1	0	0	2.1	0	0	11.8
318	457611.27	5636137.99	483.96	0	DEN	A		93.7	9.6	0	0	0	81	4.7	3.3	0	0	1.5	0	0	12.8
319	457600.95	5636201.96	489.89	0	DEN	A		93.7	9.4	0	0	0	80.8	4.6	3.3	0	0	1.5	0	0	12.9
328	457617.72	5636185.85	488.07	0	DEN	A		93.7	9.4	0	0	0	80.9	4.6	3.3	0	0	1.5	0	0	12.8
330	457410.39	5635791.87	444.09	0	DEN	A		93.7	10.3	0	0	0	81.8	5	3.1	0	0	3.8	0	0	10.2
331	457659.98	5634907.28	393.5	0	DEN	A		93.7	12.3	0	0	0	83.8	6	3.1	0	0	1.6	0	0	11.4
349	457618.21	5636170.5	486.72	0	DEN	A		93.7	9.2	0	0	0	80.9	4.6	3.3	0	0	1.5	0	0	12.6
361	457442.97	5636284.67	506.63	0	DEN	A		93.7	8.8	0	0	0	80.5	4.5	3.1	0	0	0.6	0	0	13.8
373	457873.31	5635064.75	403.5	0	DEN	A		93.7	11.9	0	0	0	83.6	5.9	3.3	0	0	1.5	0	0	11.3
383	457389	5634821.83	377.67	0	DEN	A		93.7	12.2	0	0	0	83.9	6	3.2	0	0	1.6	0	0	11.1
391	457392.1	5635608.17	425.48	0	DEN	A		93.7	10.5	0	0	0	82.2	5.2	3.1	0	0	2.3	0	0	11.3
392	457378.66	5635420.66	407.62	0	DEN	A		93.7	10.9	0	0	0	82.7	5.4	3.1	0	0	1.8	0	0	11.5
394	457426.72	5636286	508.1	0	DEN	A		93.7	8.7	0	0	0	80.5	4.5	3.1	0	0	0.5	0	0	13.8
398	457537.72	5636254.86	497.32	0	DEN	A		93.7	8.8	0	0	0	80.6	4.5	3.2	0	0	1.6	0	0	12.5
399	457595.08	5634888	393.5	0	DEN	A		93.7	12	0	0	0	83.8	6	3.1	0	0	1.6	0	0	11.1
402	457611.77	5636191.55	488.61	0	DEN	A		93.7	8.9	0	0	0	80.8	4.6	3.3	0	0	1.5	0	0	12.4
407	457604.75	5636107.41	481.09	0	DEN	A		93.7	9.1	0	0	0	81.1	4.7	3.3	0	0	1.5	0	0	12.3
415	457644.42	5634902.66	393.5	0	DEN	A		93.7	11.9	0	0	0	83.8	6	3.1	0	0	1.6	0	0	11
416	457330.62	5635298.41	395.01	0	DEN	A		93.7	10.9	0	0	0	82.9	5.5	3.1	0	0	1.8	0	0	11.3
419	457394.53	5636277.88	511.08	0	DEN	A		93.7	8.5	0	0	0	80.5	4.5	3.1	0	0	0.5	0	0	13.6
422	457394.3	5635716.67	436.23	0	DEN	A		93.7	10	0	0	0	82	5.1	3.1	0	0	3	0	0	10.4
438	457385.66	5635490.41	414.15	0	DEN	A		93.7	10.4	0	0	0	82.5	5.3	3.1	0	0	1.9	0	0	11.2
448	457368.94	5635395.74	405.09	0	DEN	A		93.7	10.5	0	0	0	82.7	5.4	3.1	0	0	1.8	0	0	11.1
455	457579.3	5636222.75	492.49	0	DEN	A		93.7	8.4	0	0	0	80.7	4.6	3.3	0	0	1.5	0	0	12
459	457407.69	5634835.12	380.1	0	DEN	A		93.7	11.5	0	0	0	83.9	6	3.2	0	0	1.6	0	0	10.5
461	457574.39	5636227.48	493.16	0	DEN	A		93.7	8.3	0	0	0	80.7	4.6	3.3	0	0	1.5	0	0	11.9
462	457506.02	5636273.4	500.7	0	DEN	A		93.7	8.1	0	0	0	80.5	4.5	3.1	0	0	1.6	0	0	12.1
472	457391.26	5635592.81	423.97	0	DEN	A		93.7	9.8	0	0	0	82.3	5.2	3.1	0	0	2.2	0	0	10.7
476	457361.29	5636249.67	513.5	0	DEN	A		93.7	8.1	0	0	0	80.5	4.5	3.1	0	0	0.5	0	0	13.1
483	457497.36	5634872.08	390.04	0	DEN	A		93.7	11.4	0	0	0	83.8	6	3.2	0	0	1.6	0	0	10.5
486	457606.51	5636196.61	489.18	0	DEN	A		93.7	8.3	0	0	0	80.8	4.6	3.3	0	0	1.5	0	0	11.8
490	457301.04	5635232.47	388.06	0	DEN	A		93.7	10.6	0	0	0	83.1	5.6	3.1	0	0	1.8	0	0	10.7
492	457791.06	5634991.14	393.5	0	DEN	A		93.7	11.2	0	0	0	83.7	5.9	3.2	0	0	1.6	0	0	10.5
495	457609.57	5636130.01	483.22	0	DEN	A		93.7	8.5	0	0	0	81	4.7	3.3	0	0	1.5	0	0	11.7
502	457609.09	5634892.16	393.5	0	DEN	A		93.7	11.3	0	0	0	83.8	6	3.1	0	0	1.6	0	0	10.4
511	457288.75	5636095.39	513.5	0	DEN	A		93.7	8.3	0	0	0	81	4.7	3.1	0	0	1.6	0	0	11.6
514	457461.68	5636283.13	504.9	0	DEN	A		93.7	7.8	0	0	0	80.5	4.5	3.1	0	0	0.8	0	0	12.6
602	457817.62	5635014.91	396.84	0	DEN	A		93.7	10.9	0	0	0	83.7	5.9	3.2	0	0	1.6	0	0	10.2
603	457388.87	5635548.94	419.68	0	DEN	A		93.7	9.6	0	0	0	82.4	5.3	3.1	0	0	2	0	0	10.4
611	457290.02	5635207.91	385.59	0	DEN	A		93.7	10.3	0	0	0	83.1	5.6	3.1	0	0	1.8	0	0	10.3
612	457375.28	5634812.07	375.97	0	DEN	A		93.7	11.1	0	0	0	83.9	6	3.1	0	0	1.6	0	0	10
618	457568.54	5636233.1	493.88	0	DEN	A		93.7	7.8	0	0	0	80.7	4.6	3.2	0	0	1.5	0	0	11.4
624	457603.21	5636100.22	480.42	0	DEN	A		93.7	8.2	0	0	0	81.1	4.7	3.3	0	0	1.5	0	0	11.3
626	457383.32	5635447.47	410.16	0	DEN	A		93.7	9.7	0	0	0	82.6	5.4	3.1	0	0	1.8	0	0	10.4
654	457583.88	5636218.36	491.91	0	DEN	A		93.7	7.6	0	0	0	80.7	4.6	3.3	0	0	1.5	0	0	11.2
656	457416.9	5636285.71	508.87	0	DEN	A		93.7	7.3	0	0	0	80.5	4.5	3.1	0	0	0.5	0	0	12.4
692	457612.81	5636145.21	484.63	0	DEN	A		93.7	7.6	0	0	0	81	4.7	3.3	0	0	1.5	0	0	10.9
694	457601.92	5636094.17	479.87	0	DEN	A		93.7	7.7	0	0	0	81.1	4.7	3.3	0	0	1.5	0	0	10.8
704	457606.19	5636114.16	481.72	0	DEN	A		93.7	7.5	0	0	0	81	4.7	3.3	0	0	1.5	0	0	10.7
710	457501.12	5636276.27	501.21	0	DEN	A		93.7	6.9	0	0	0	80.5	4.5	3.1	0	0	1.5	0	0	10.9
713	457616.78	5636163.82	486.23	0	DEN	A		93.7	7.3	0	0	0	80.9	4.7	3.3	0	0	1.5	0	0	10.6
843	457291.4	5636101.04	513.5	0	DEN	A		93.7	7.3	0	0	0	80.9	4.7	3.1	0	0	1.6	0	0	10.6
853	457596	5636206.71	490.46	0	DEN	A		93.7	7.1	0	0	0	80.8	4.6	3.3	0	0	1.5	0	0	10.6
938	457619.6	5636177.02	487.25	0	DEN	A		93.7	7	0	0	0	80.9	4.6	3.3	0	0	1.5	0	0	10.3
941	457285.04	5636087.5	513.5	0	DEN	A		93.7	7.1	0	0	0	81	4.7	3.1	0	0	1.6	0	0	10.3
945	457589.58	5636212.88	491.25	0	DEN	A		93.7	6.8	0	0	0	80.8	4.6	3.3	0	0	1.5	0	0	10.3
993	457613.9	5636150.3	485.07	0	DEN	A		93.7	6.7	0	0	0	80.9	4.7	3.3	0	0	1.5	0	0	10
1007	457542.84	5636251.87	496.77	0	DEN	A		93.7	6.4	0	0	0	80.6	4.5	3.2	0	0	1.6	0	0	10.1
1065	457399.69	5636279.68	510.62	0	DEN	A		93.7	5.9	0	0	0	80.5	4.5	3.1	0	0	0.5	0	0	11
1097	457492.02	5636280.65	502.12	0	DEN	A		93.7	5.8	0	0	0	80.5	4.5	3.1	0	0	0.9	0	0	10.4
1119	457421.25	5636286.45	508.52	0	DEN	A		93.7	5.6	0	0	0	80.5	4.5	3.1	0	0	0.5	0	0	10.7

Point Source, ISO 9613, Name: "FrontLoaderCAT993_03_pp", ID: "!09080101!FLoader_03_pp"																					
Nr.	X	Y	Z	Refl.	DEN	Freq.		Lw	l/a	Optime	K0	Di	Adiv	Aatm	Agr	Afol	Ahous	Abar	Cmet	RL	Lr
	(m)	(m)	(m)			(Hz)		dB(A)	dB	dB	(dB)	(dB)	(dB)	(dB)	(dB)	(dB)	(dB)	(dB)	(dB)	(dB)	dB(A)
24	458169.44	5635307.11	412.5	0	23	A		116	0	-1.9	0	0	83.2	5.2	3.6	0	0	1.7	0	0	20.4

Point Source, ISO 9613, Name: "Shovel_10m3_pp", ID: "!09080101!Shov10_pp"																					
Nr.	X	Y	Z	Refl.	DEN	Freq.		Lw	l/a	Optime	K0	Di	Adiv	Aatm	Agr	Afol	Ahous	Abar	Cmet	RL	Lr
	(m)	(m)	(m)			(Hz)		dB(A)	dB	dB	(dB)	(dB)	(dB)	(dB)	(dB)	(dB)	(dB)	(dB)	(dB)	(dB)	dB(A)
37	455666.07	5635063.4	433.5	0	23	A		114	0	-1.9	0	0	83.8	5.4	3.1	0	0	1.7	0	0	18

Area Source, ISO 9613, Name: "TransferTowerPebbleCrusher_Top", ID: "!0200!TTPC_top"																					
Nr.	X	Y	Z	Refl.	DEN	Freq.		Lw	l/a	Optime	K0	Di	Adiv	Aatm	Agr	Afol	Ahous	Abar	Cmet	RL	Lr
	(m)	(m)	(m)			(Hz)		dB(A)	dB	dB	(dB)	(dB)	(dB)	(dB)	(dB)	(dB)	(dB)	(dB)	(dB)	(dB)	dB(A)
41	454945.8	5634996.35	402.47	0	DEN	A		93.4	19.2	0	0	0	84.4	2.2	2	0	0	4	0	0	20
53	454946.75	5634990.45	402.23	0	DEN	A		93.4	19	0	0	0	84.4	2.2	2	0	0	3.9	0	0	20

Area Source, ISO 9613, Name: "Primary Crusher_Top", ID: "!0300!PriC_top"																					
Nr.	X	Y	Z	Refl.	DEN	Freq.		Lw	l/a	Optime	K0	Di	Adiv	Aatm	Agr	Afol	Ahous	Abar	Cmet	RL	Lr
	(m)	(m)	(m)			(Hz)		dB(A)	dB	dB	(dB)	(dB)	(dB)	(dB)	(dB)	(dB)	(dB)	(dB)	(dB)	(dB)	dB(A)
50	454808.22	5634679.72	412.41	0	DEN	A		89.7	23.3	0	0	0	85	2.5	2	0	0	2.8	0	0	20.7
77	454808.43	5634664.48	411.88	0	DEN	A		89.7	21.6	0	0	0	85.1	2.5	2	0	0	2.8	0	0	18.9
102	454812.01	5634673.42	412.04	0	DEN	A		89.7	20.6	0	0	0	85	2.5	2	0	0	2.8	0	0	18
683	454801.01	5634661.98	411.98	0	DEN	A		89.7	15.7	0	0	0	85.1	2.5	2	0	0	2.8	0	0	13.1

Area Source, ISO 9613, Name: "CFR_Plant", ID: "!09070600!CFR_Pla"																					
Nr.	X	Y	Z	Refl.	DEN	Freq.		Lw	l/a	Optime	K0	Di	Adiv	Aatm	Agr	Afol	Ahous	Abar	Cmet	RL	Lr
	(m)	(m)	(m)			(Hz)		dB(A)	dB	dB	(dB)	(dB)	(dB)	(dB)	(dB)	(dB)	(dB)	(dB)	(dB)	(dB)	dB(A)
55	455806.25	5634484.87	377.3	0	DEN	A		82.5	29.8	0	0	0	84.8	6.3	6.2	0	0	1	0	0	14.1

Line Source, ISO 9613, Name: "UGR3 AEXPortal to Crusher", ID: "!070102!HA785_UGR3"																					
Nr.	X	Y	Z	Refl.	DEN	Freq.		Lw	l/a	Optime	K0	Di	Adiv	Aatm	Agr	Afol	Ahous	Abar	Cmet	RL	Lr
	(m)	(m)	(m)			(Hz)		dB(A)	dB	dB	(dB)	(dB)	(dB)	(dB)	(dB)	(dB)	(dB)	(dB)	(dB)	(dB)	dB(A)
105	455710.89	5634201.98	381.17	0	DEN	A		90.9	19.5	0	0	0	85.3	6.8	4.2	0	0	1.4	0	0	12.8
128	455748.41	5634306.05	382.03	0	DEN	A		90.9	18.8	0	0	0	85.1	6.6	4.2	0	0	1.4	0	0	12.4
161	454778.16	5634547.91	381.8	0	DEN	A		90.9	18.6	0	0	0	85.3	6.7	3.4	0	0	1.4	0	0	12.7
192	455568.39	5634176.94	377.43	0	DEN	A		90.9	18.2	0	0	0	85.4	6.8	4.1	0	0	1.4	0	0	11.4
292	454936.08	5634369.87	382.09	0	DEN	A		90.9	17	0	0	0	85.4	6.8	4.1	0	0	1.3	0	0	10.2
316	455767.19	5634389.81	380.14	0	DEN	A		90.9	16.3	0	0	0	84.9	6.6	4.2	0	0	1.4	0	0	10.1

Point Source, ISO 9613, Name: "5 MW Gen Exhaust - Power Plant", ID: "!0501!Pwr5MW_ex"																					
Nr.	X	Y	Z	Refl.	DEN	Freq.		Lw	l/a	Optime	K0	Di	Adiv	Aatm	Agr	Afol	Ahous	Abar	Cmet	RL	Lr
	(m)	(m)	(m)			(Hz)		dB(A)	dB	dB	(dB)	(dB)	(dB)	(dB)	(dB)	(dB)	(dB)	(dB)	(dB)	(dB)	dB(A)
110	457004.98	5636635.63	408.49	0	DEN	A		104.3	0	0	0	0	79.3	5.2	-0.9	0	0	5.9	0	0	14.9

Point Source, ISO 9613, Name: "5 MW Gen Exhaust - Power Plant", ID: "!0501!Pwr3MW_ex"																					
Nr.	X	Y	Z	Refl.	DEN	Freq.		Lw	l/a	Optime	K0	Di	Adiv	Aatm	Agr	Afol	Ahous	Abar	Cmet	RL	Lr
	(m)	(m)	(m)			(Hz)		dB(A)	dB	dB	(dB)	(dB)	(dB)	(dB)	(dB)	(dB)	(dB)	(dB)	(dB)	(dB)	dB(A)
113	457008.98	5636630.04	408.33	0	DEN	A		104.3	0	0	0	0	79.3	5.2	-0.9	0	0	5.8	0	0	14.9

Point Source, ISO 9613, Name: "5 MW Gen Exhaust - Power Plant", ID: "!0501!Pwr3MW_ex"																					
Nr.	X	Y	Z	Refl.	DEN	Freq.		Lw	l/a	Optime	K0	Di	Adiv	Aatm	Agr	Afol	Ahous	Abar	Cmet	RL	Lr
	(m)	(m)	(m)			(Hz)		dB(A)	dB	dB	(dB)	(dB)	(dB)	(dB)	(dB)	(dB)	(dB)	(dB)	(dB)	(dB)	dB(A)
116	457013.61	5636623.55	408.15	0	DEN	A		104.3	0	0	0	0	79.3	5.2	-0.9	0	0	5.8	0	0	14.9

Point Source, ISO 9613, Name: "5 MW Gen Exhaust - Power Plant", ID: "!0500!Pwr5MW_ex"																					
Nr.	X	Y	Z	Refl.	DEN	Freq.		Lw	l/a	Optime	K0	Di	Adiv	Aatm	Agr	Afol	Ahous	Abar	Cmet	RL	Lr
	(m)	(m)	(m)			(Hz)		dB(A)	dB	dB	(dB)	(dB)	(dB)	(dB)	(dB)	(dB)	(dB)	(dB)	(dB)	(dB)	dB(A)
117	457018.24	5636617.19	407.97	0	DEN	A		104.3	0	0	0	0	79.3	5.2	-0.9	0	0	5.8	0	0	14.9

Point Source, ISO 9613, Name: "5 MW Gen Exhaust - Power Plant", ID: "!0500!Pwr5MW_ex"																					
Nr.	X	Y	Z	Refl.	DEN	Freq.		Lw	l/a	Optime	K0	Di	Adiv	Aatm	Agr	Afol	Ahous	Abar	Cmet	RL	Lr
	(m)	(m)	(m)			(Hz)		dB(A)	dB	dB	(dB)	(dB)	(dB)	(dB)	(dB)	(dB)	(dB)	(dB)	(dB)	(dB)	dB(A)
119	457022.73	5636611.46	407.81	0	DEN	A		104.3	0	0	0	0	79.3	5.2	-0.9	0	0	5.8	0	0	14.9

Point Source, ISO 9613, Name: "5 MW Gen Exhaust - Power Plant", ID: "!0500!Pwr5MW_ex"																					
Nr.	X	Y	Z	Refl.	DEN	Freq.		Lw	l/a	Optime	K0	Di	Adiv	Aatm	Agr	Afol	Ahous	Abar	Cmet	RL	Lr
	(m)	(m)	(m)			(Hz)		dB(A)	dB	dB	(dB)	(dB)	(dB)	(dB)	(dB)	(dB)	(dB)	(dB)	(dB)	(dB)	dB(A)
120	457026.87	5636605.04	407.63	0	DEN	A		104.3	0	0	0	0	79.4	5.2	-1	0	0	5.8	0	0	14.9

Point Source, ISO 9613, Name: "5 MW Gen Exhaust - Power Plant", ID: "!0500!Pwr5MW_ex"																					
Nr.	X	Y	Z	Refl.	DEN	Freq.		Lw	l/a	Optime	K0	Di	Adiv	Aatm	Agr	Afol	Ahous	Abar	Cmet	RL	Lr
	(m)	(m)	(m)			(Hz)		dB(A)	dB	dB	(dB)	(dB)	(dB)	(dB)	(dB)	(dB)	(dB)	(dB)	(dB)	(dB)	dB(A)
123	457030.39	5636599.24	407.48	0	DEN	A		104.3	0	0	0	0	79.4	5.2	-1	0	0	5.8	0	0	14.9

Point Source, ISO 9613, Name: "5 MW Gen Exhaust - Power Plant", ID: "!0500!Pwr5MW_ex"																					
Nr.	X	Y	Z	Refl.	DEN	Freq.		Lw	l/a	Optime	K0	Di	Adiv	Aatm	Agr	Afol	Ahous	Abar	Cmet	RL	Lr
	(m)	(m)	(m)			(Hz)		dB(A)	dB	dB	(dB)	(dB)	(dB)	(dB)	(dB)	(dB)	(dB)	(dB)	(dB)	(dB)	dB(A)
124	457034.09	5636594.18	407.33	0	DEN	A		104.3	0	0	0	0	79.4	5.2	-1	0	0	5.8	0	0	14.9

Point Source, ISO 9613, Name: "5 MW Gen Exhaust - Power Plant", ID: "!0500!Pwr5MW_ex"																					
Nr.	X	Y	Z	Refl.	DEN	Freq.		Lw	l/a	Optime	K0	Di	Adiv	Aatm	Agr	Afol	Ahous	Abar	Cmet	RL	Lr
	(m)	(m)	(m)			(Hz)		dB(A)	dB	dB	(dB)	(dB)	(dB)	(dB)	(dB)	(dB)	(dB)	(dB)	(dB)	(dB)	dB(A)
125	457036.54	5636590.61	407.23	0	DEN	A		104.3	0	0	0	0	79.4	5.2	-1	0	0	5.8	0	0	14.9

Point Source, ISO 9613, Name: "FrontLoaderSmallerCAT966_01_pp", ID: "!09080101!FL_01_pp"																					
Nr.	X	Y	Z	Refl.	DEN	Freq.		Lw	l/a	Optime	K0	Di	Adiv	Aatm	Agr	Afol	Ahous	Abar	Cmet	RL	Lr
	(m)	(m)	(m)			(Hz)		dB(A)	dB	dB	(dB)	(dB)	(dB)	(dB)	(dB)	(dB)	(dB)	(dB)	(dB)	(dB)	dB(A)
153	456249.26	5635075.14	402.5	0	23	A		109	0	-1.2	0	0	83.5	3.5	3.5	0	0	1.4	0	0	15.8

Point Source, ISO 9613, Name: "FrontLoaderSmallerCAT966_02_pp", ID: "!09080101!FL_02_pp"																					
Nr.	X	Y	Z	Refl.	DEN	Freq.		Lw	l/a	Optime	K0	Di	Adiv	Aatm	Agr	Afol	Ahous	Abar	Cmet	RL	Lr
	(m)	(m)	(m)			(Hz)		dB(A)	dB	dB	(dB)	(dB)	(dB)	(dB)	(dB)	(dB)	(dB)	(dB)	(dB)	(dB)	dB(A)
166	458084.75	5635108.4	402.5	0	23	A		109	0	-1.2	0	0	83.6	3.5	3.5	0	0	1.7	0	0	15.5

Area Source, ISO 9613, Name: "Dozer_CAT_D6_03_pp", ID: "!09080101!D6_03_pp"																				
Nr.	X	Y	Z	Refl.	DEN	Freq.		Lw	l/a	Optime	K0	Di	Adiv	Aatm	Agr	Afol	Ahous	Abar	Cmet	RL	Lr
	(m)	(m)	(m)			(Hz)		dB(A)	dB	dB	(dB)	(dB)	(dB)	(dB)	(dB)	(dB)	(dB)	(dB)	(dB)	(dB)	dB(A)
232	456004.47	5635854.77	411	0	23	A		67.1	39.8	-1.9	0	0	81.9	4.6	3.2	0	0	1.6	0	0	13.7
522	456099.35	5635934.13	411.41	0	23	A		67.1	37.3	-1.9	0	0	81.6	4.5	3.2	0	0	1.6	0	0	11.5
949	456151.21	5635935.9	413.5	0	23	A		67.1	36	-1.9	0	0	81.6	4.5	3.2	0	0	1.6	0	0	10.3

Area Source, ISO 9613, Name: "Dozer_CAT_D8_pit", ID: "!09080101!D8_pit"																				
Nr.	X	Y	Z	Refl.	DEN	Freq.		Lw	l/a	Optime	K0	Di	Adiv	Aatm	Agr	Afol	Ahous	Abar	Cmet	RL	Lr
	(m)	(m)	(m)			(Hz)		dB(A)	dB	dB	(dB)	(dB)	(dB)	(dB)	(dB)	(dB)	(dB)	(dB)	(dB)	(dB)	dB(A)
234	456489.83	5635620.24	453.5	0	23	A		74.2	33.2	-1.9	0	0	82.2	4.8	3.1	0	0	1.6	0	0	13.7
255	456489.38	5635650.31	453.5	0	23	A		74.2	32.9	-1.9	0	0	82.1	4.7	3.1	0	0	1.6	0	0	13.5
340	456499.05	5635594.75	453.5	0	23	A		74.2	32.1	-1.9	0	0	82.3	4.8	3.1	0	0	1.6	0	0	12.5
358	456495.43	5635677.32	453.5	0	23	A		74.2	31.8	-1.9	0	0	82.1	4.7	3.1	0	0	1.6	0	0	12.5
381	456507.02	5635696.38	453.5	0	23	A		74.2	31.7	-1.9	0	0	82	4.7	3.1	0	0	1.6	0	0	12.4
404	456520.7	5635571.14	453.5	0	23	A		74.2	31.8	-1.9	0	0	82.3	4.8	3.1	0	0	1.7	0	0	12.1
449	456530.86	5635713.02	453.5	0	23	A		74.2	31.2	-1.9	0	0	82	4.7	3.1	0	0	1.6	0	0	12
466	456562.38	5635732.12	453.5	0	23	A		74.2	30.9	-1.9	0	0	81.9	4.6	3.1	0	0	1.6	0	0	11.8
507	456562.65	5635536.7	453.5	0	23	A		74.2	31.1	-1.9	0	0	82.4	4.8	3.1	0	0	1.7	0	0	11.4
630	456537.49	5635556.84	453.5	0	23	A		74.2	30.8	-1.9	0	0	82.3	4.8	3.1	0	0	1.7	0	0	11.1
708	456587.58	5635516.85	453.5	0	23	A		74.2	30.2	-1.9	0	0	82.4	4.8	3.1	0	0	1.7	0	0	10.4

Area Source, ISO 9613, Name: "Dozer_CAT_D10_02_pp", ID: "!09080101!D10_02_pp"																				
Nr.	X	Y	Z	Refl.	DEN	Freq.		Lw	l/a	Optime	K0	Di	Adiv	Aatm	Agr	Afol	Ahous	Abar	Cmet	RL	Lr
	(m)	(m)	(m)			(Hz)		dB(A)	dB	dB	(dB)	(dB)	(dB)	(dB)	(dB)	(dB)	(dB)	(dB)	(dB)	(dB)	dB(A)
310	457177.47	5636006.21	513.5	0	23	A		66	39.3	-1.9	0	0	81.2	4.4	3	0	0	1.8	0	0	13.1
337	457153.5	5635904.34	513.5	0	23	A		66	39.3	-1.9	0	0	81.4	4.5	3.1	0	0	1.7	0	0	12.7
445	457363.97	5636182.37	513.5	0	23	A		66	38	-1.9	0	0	80.7	4.2	3	0	0	1.8	0	0	12.3
640	457294.68	5636057.35	513.5	0	23	A		66	37.5	-1.9	0	0	81.1	4.3	3	0	0	1.8	0	0	11.4
674	457327.76	5636159.86	513.5	0	23	A		66	37	-1.9	0	0	80.8	4.2	3	0	0	1.8	0	0	11.3
698	457281.91	5636120.35	513.5	0	23	A		66	36.9	-1.9	0	0	80.9	4.3	3	0	0	1.8	0	0	11
849	457425.73	5636143.1	513.5	0	23	A		66	36.5	-1.9	0	0	80.9	4.2	3	0	0	1.8	0	0	10.7
962	457233.28	5636070.72	513.5	0	23	A		66	36.4	-1.9	0	0	81	4.3	3	0	0	1.8	0	0	10.4
974	457074.32	5635878.29	513.5	0	23	A		66	36.9	-1.9	0	0	81.5	4.5	3.1	0	0	1.7	0	0	10.2

Area Source, ISO 9613, Name: "Dozer_CAT_D6_01_pp", ID: "!09080101!D6_01_pp"																				
Nr.	X	Y	Z	Refl.	DEN	Freq.		Lw	l/a	Optime	K0	Di	Adiv	Aatm	Agr	Afol	Ahous	Abar	Cmet	RL	Lr
	(m)	(m)	(m)			(Hz)		dB(A)	dB	dB	(dB)	(dB)	(dB)	(dB)	(dB)	(dB)	(dB)	(dB)	(dB)	(dB)	dB(A)
365	458134.52	5635363.36	413.5	0	23	A		65.2	41.6	-1.9	0	0	83.1	5.1	3.2	0	0	1.6	0	0	11.9

Point Source, ISO 9613, Name: "MobileCrane50t_01_pp", ID: "!09080101!MobCra50t_01_pp"																				
Nr.	X	Y	Z	Refl.	DEN	Freq.		Lw	l/a	Optime	K0	Di	Adiv	Aatm	Agr	Afol	Ahous	Abar	Cmet	RL	Lr
	(m)	(m)	(m)			(Hz)		dB(A)	dB	dB	(dB)	(dB)	(dB)	(dB)	(dB)	(dB)	(dB)	(dB)	(dB)	(dB)	dB(A)
389	454982.62	5635191.54	397.66	0	23	A		112	0	-6	0	0	84	5.5	4.3	0	0	1.4	0	0	10.6

vert. Area Source, ISO 9613, Name: "TransferTowerPebbleCrusher_F3", ID: "!0200!TTPC_f3"																				
Nr.	X	Y	Z	Refl.	DEN	Freq.		Lw	l/a	Optime	K0	Di	Adiv	Aatm	Agr	Afol	Ahous	Abar	Cmet	RL	Lr
	(m)	(m)	(m)			(Hz)		dB(A)	dB	dB	(dB)	(dB)	(dB)	(dB)	(dB)	(dB)	(dB)	(dB)	(dB)	(dB)	dB(A)
530	454950.17	5634998.04	395.87	0	DEN	A		94	11.3	0	0	0	84.4	2.2	2.9	0	0	5.1	0	0	10.8
535	454950.17	5634998.04	400.87	0	DEN	A		94	11.3	0	0	0	84.4	2.2	2	0	0	4.5	0	0	12.3
538	454950.17	5634998.04	401.87	0	DEN	A		94	11.3	0	0	0	84.4	2.2	2	0	0	4.3	0	0	12.5
542	454950.17	5634998.04	396.87	0	DEN	A		94	11.3	0	0	0	84.4	2.2	2.5	0	0	5.2	0	0	11.1
545	454950.17	5634998.04	399.87	0	DEN	A		94	11.3	0	0	0	84.4	2.2	2	0	0	4.8	0	0	12
550	454950.17	5634998.04	394.87	0	DEN	A		94	11.3	0	0	0	84.4	2.2	3.2	0	0	5.1	0	0	10.4
556	454950.17	5634998.04	393.87	0	DEN	A		94	11.3	0	0	0	84.4	2.2	3.5	0	0	5.2	0	0	10.1
559	454950.17	5634998.04	397.87	0	DEN	A		94	11.3	0	0	0	84.4	2.2	2.2	0	0	5.1	0	0	11.4
562	454950.17	5634998.04	398.87	0	DEN	A		94	11.3	0	0	0	84.4	2.2	2.1	0	0	5	0	0	11.7

Area Source, ISO 9613, Name: "Dozer_CAT_D10_pp", ID: "!09080101!D10_pp"																				
Nr.	X	Y	Z	Refl.	DEN	Freq.		Lw	l/a	Optime	K0	Di	Adiv	Aatm	Agr	Afol	Ahous	Abar	Cmet	RL	Lr
	(m)	(m)	(m)			(Hz)		dB(A)	dB	dB	(dB)	(dB)	(dB)	(dB)	(dB)	(dB)	(dB)	(dB)	(dB)	(dB)	dB(A)
620	456054.63	5635252.89	403.5	0	23	A		68	37.8	-1.9	0	0	83.2	5.2	3.1	0	0	1.6	0	0	10.7
646	456237.33	5635007	403.5	0	23	A		68	38.1	-1.9	0	0	83.6	5.3	3.1	0	0	1.7	0	0	10.4

vert. Area Source, ISO 9613, Name: "PrimaryCrusher_F1", ID: "!0300!PriC_f1"																				
Nr.	X	Y	Z	Refl.	DEN	Freq.		Lw	l/a	Optime	K0	Di	Adiv	Aatm	Agr	Afol	Ahous	Abar	Cmet	RL	Lr
	(m)	(m)	(m)			(Hz)		dB(A)	dB	dB	(dB)	(dB)	(dB)	(dB)	(dB)	(dB)	(dB)	(dB)	(dB)	(dB)	dB(A)
718	454816.74	5634669.13	399.36	0	DEN	A		90.5	14.6	0	0	0	85	2.5	1.8	0	0	2.9	0	0	12.7
720	454816.74	5634669.13	408.36	0	DEN	A		90.5	14.6	0	0	0	85	2.5	1.9	0	0	2.8	0	0	12.7
722	454816.74	5634669.13	407.36	0	DEN	A		90.5	14.6	0	0	0	85	2.5	1.9	0	0	2.8	0	0	12.7
723	454816.74	5634669.13	391.36	0	DEN	A		90.5	14.6	0	0	0	85	2.5	1.9	0	0	2.9	0	0	12.7
725	454816.74	5634669.13	409.36	0	DEN	A		90.5	14.6	0	0	0	85	2.5	2	0	0	2.8	0	0	12.7
728	454816.74	5634669.13	410.36	0	DEN	A		90.5	14.6	0	0	0	85	2.5	2	0	0	2.8	0	0	12.7
729	454816.74	5634669.13	411.36	0	DEN	A		90.5	14.6	0	0	0	85	2.5	2	0	0	2.8	0	0	12.7
731	454816.74	5634669.13	388.36	0	DEN	A		90.5	14.6	0	0	0	85	2.5	2.7	0	0	2.1	0	0	12.7
733	454816.74	5634669.13	398.36	0	DEN	A		90.5	14.6	0	0	0	85	2.5	1.8	0	0	2.9	0	0	12.7
734	454816.74	5634669.13	389.36	0	DEN	A		90.5	14.6	0	0	0	85	2.5	2.3	0	0	2.4	0	0	12.7
736	454816.74	5634669.13	392.36	0	DEN	A		90.5	14.6	0	0	0	85	2.5	1.8	0	0	3	0	0	12.7
739	454816.74	5634669.13	384.36	0	DEN	A		90.5	14.6	0	0	0	85	2.5	3.7	0	0	1.2	0	0	12.6

741	454816.74	5634669.13	383.36	0	DEN	A		90.5	14.6	0	0	0	85	2.5	4	0	0	0.9	0	0	12.6
744	454816.74	5634669.13	385.36	0	DEN	A		90.5	14.6	0	0	0	85	2.5	3.5	0	0	1.3	0	0	12.7
745	454816.74	5634669.13	387.36	0	DEN	A		90.5	14.6	0	0	0	85	2.5	3.1	0	0	1.7	0	0	12.7
748	454816.74	5634669.13	386.36	0	DEN	A		90.5	14.6	0	0	0	85	2.5	3.3	0	0	1.5	0	0	12.7
751	454816.74	5634669.13	394.36	0	DEN	A		90.5	14.6	0	0	0	85	2.5	1.8	0	0	3	0	0	12.7
752	454816.74	5634669.13	400.36	0	DEN	A		90.5	14.6	0	0	0	85	2.5	1.9	0	0	2.9	0	0	12.7
754	454816.74	5634669.13	395.36	0	DEN	A		90.5	14.6	0	0	0	85	2.5	1.8	0	0	3	0	0	12.7
755	454816.74	5634669.13	396.36	0	DEN	A		90.5	14.6	0	0	0	85	2.5	1.8	0	0	3	0	0	12.7
757	454816.74	5634669.13	404.36	0	DEN	A		90.5	14.6	0	0	0	85	2.5	1.9	0	0	2.9	0	0	12.7
759	454816.74	5634669.13	401.36	0	DEN	A		90.5	14.6	0	0	0	85	2.5	1.9	0	0	2.9	0	0	12.7
760	454816.74	5634669.13	402.36	0	DEN	A		90.5	14.6	0	0	0	85	2.5	1.9	0	0	2.9	0	0	12.7
762	454816.74	5634669.13	393.36	0	DEN	A		90.5	14.6	0	0	0	85	2.5	1.8	0	0	3	0	0	12.7
765	454816.74	5634669.13	403.36	0	DEN	A		90.5	14.6	0	0	0	85	2.5	1.9	0	0	2.9	0	0	12.7
767	454816.74	5634669.13	405.36	0	DEN	A		90.5	14.6	0	0	0	85	2.5	1.9	0	0	2.9	0	0	12.7
769	454816.74	5634669.13	390.36	0	DEN	A		90.5	14.6	0	0	0	85	2.5	2	0	0	2.7	0	0	12.7
770	454816.74	5634669.13	406.36	0	DEN	A		90.5	14.6	0	0	0	85	2.5	1.9	0	0	2.8	0	0	12.7
774	454816.74	5634669.13	382.36	0	DEN	A		90.5	14.6	0	0	0	85	2.5	4.2	0	0	0.9	0	0	12.4
776	454816.74	5634669.13	397.36	0	DEN	A		90.5	14.6	0	0	0	85	2.5	1.8	0	0	3	0	0	12.7

vert. Area Source, ISO 9613, Name: "TransferTowerPebbleCrusher_F4", ID: "!0200!TTPC_f4"

Nr.	X	Y	Z	Refl.	DEN	Freq.		Lw	l/a	Optime	K0	Di	Adiv	Aatm	Agr	Afol	Ahous	Abar	Cmet	RL	Lr
	(m)	(m)	(m)			(Hz)		dB(A)	dB	dB	(dB)	(dB)	(dB)	(dB)	(dB)	(dB)	(dB)	(dB)	(dB)	(dB)	dB(A)
858	454940.97	5634997.69	398.99	0	DEN	A		93.5	10.8	0	0	0	84.4	2.2	2	0	0	4.7	0	0	11
871	454940.97	5634997.69	396.99	0	DEN	A		93.5	10.8	0	0	0	84.4	2.2	2.5	0	0	4.8	0	0	10.5
874	454940.97	5634997.69	395.99	0	DEN	A		93.5	10.8	0	0	0	84.4	2.2	2.9	0	0	4.7	0	0	10.2
877	454940.97	5634997.69	400.99	0	DEN	A		93.5	10.8	0	0	0	84.4	2.2	2	0	0	4.3	0	0	11.5
880	454940.97	5634997.69	399.99	0	DEN	A		93.5	10.8	0	0	0	84.4	2.2	2	0	0	4.5	0	0	11.3
882	454940.97	5634997.69	397.99	0	DEN	A		93.5	10.8	0	0	0	84.4	2.2	2.2	0	0	4.8	0	0	10.7
883	454940.97	5634997.69	401.99	0	DEN	A		93.5	10.8	0	0	0	84.4	2.2	2	0	0	4.1	0	0	11.7

Receiver

Name:	RPOR4
ID:	!0A!POR_4
X:	451915.24 m
Y:	5639044.17 m
Z:	356.57 m

Point Source, ISO 9613, Name: "VentilationFan_AEX", ID: "!090A0602!VentFan_aex"

Nr.	X	Y	Z	Refl.	DEN	Freq.		Lw	l/a	Optime	K0	Di	Adiv	Aatm	Agr	Afol	Ahous	Abar	Cmet	RL	Lr
	(m)	(m)	(m)			(Hz)		dB(A)	dB	dB	(dB)	(dB)	(dB)	(dB)	(dB)	(dB)	(dB)	(dB)	(dB)	(dB)	dB(A)
36	455504.36	5634507.08	380.08	0	DEN	A		128.5	0	0	0	0	86.2	15.1	2.4	0	0	2.7	0	0	22.1

Point Source, ISO 9613, Name: "VentilationFan_HingeLimb_FAR2", ID: "!090800!VF_HL_FAR2"

Nr.	X	Y	Z	Refl.	DEN	Freq.		Lw	l/a	Optime	K0	Di	Adiv	Aatm	Agr	Afol	Ahous	Abar	Cmet	RL	Lr
	(m)	(m)	(m)			(Hz)		dB(A)	dB	dB	(dB)	(dB)	(dB)	(dB)	(dB)	(dB)	(dB)	(dB)	(dB)	(dB)	dB(A)
39	456756.4	5633595.3	359.01	0	DEN	A		129.7	0	0	0	0	88.3	17.2	3.9	0	0	2.2	0	0	18.2

Point Source, ISO 9613, Name: "VentilationFan_HingeLimb_FAR2", ID: "!090800!VF_HL_FAR2"

Nr.	X	Y	Z	Refl.	DEN	Freq.		Lw	l/a	Optime	K0	Di	Adiv	Aatm	Agr	Afol	Ahous	Abar	Cmet	RL	Lr
	(m)	(m)	(m)			(Hz)		dB(A)	dB	dB	(dB)	(dB)	(dB)	(dB)	(dB)	(dB)	(dB)	(dB)	(dB)	(dB)	dB(A)
43	456757.36	5633595.42	359	0	DEN	A		129.7	0	0	0	0	88.3	17.2	3.9	0	0	2.2	0	0	18.2

Point Source, ISO 9613, Name: "FrontLoaderCAT993_02_pp", ID: "!09080101!FLoader_02_pp"

Nr.	X	Y	Z	Refl.	DEN	Freq.		Lw	l/a	Optime	K0	Di	Adiv	Aatm	Agr	Afol	Ahous	Abar	Cmet	RL	Lr
	(m)	(m)	(m)			(Hz)		dB(A)	dB	dB	(dB)	(dB)	(dB)	(dB)	(dB)	(dB)	(dB)	(dB)	(dB)	(dB)	dB(A)
109	456570.22	5635589.78	452.5	0	23	A		116	0	-1.9	0	0	86.3	6.6	3.4	0	0	1.8	0	0	15.9

Area Source, ISO 9613, Name: "Primary Crusher_Top", ID: "!0300!PriC_top"

Nr.	X	Y	Z	Refl.	DEN	Freq.		Lw	l/a	Optime	K0	Di	Adiv	Aatm	Agr	Afol	Ahous	Abar	Cmet	RL	Lr
	(m)	(m)	(m)			(Hz)		dB(A)	dB	dB	(dB)	(dB)	(dB)	(dB)	(dB)	(dB)	(dB)	(dB)	(dB)	(dB)	dB(A)
111	454808.22	5634679.72	412.41	0	DEN	A		89.7	23.3	0	0	0	85.4	2.6	0.8	0	0	6.4	0	0	17.9
138	454808.43	5634664.48	411.88	0	DEN	A		89.7	21.6	0	0	0	85.4	2.6	0.8	0	0	4	0	0	18.5
174	454812.01	5634673.42	412.04	0	DEN	A		89.7	20.6	0	0	0	85.4	2.6	0.8	0	0	4	0	0	17.5
408	454801.01	5634661.98	411.98	0	DEN	A		89.7	15.7	0	0	0	85.4	2.6	0.8	0	0	4	0	0	12.7

Area Source, ISO 9613, Name: "TransferTowerPebbleCrusher_Top", ID: "!0200!TTPC_top"

Nr.	X	Y	Z	Refl.	DEN	Freq.		Lw	l/a	Optime	K0	Di	Adiv	Aatm	Agr	Afol	Ahous	Abar	Cmet	RL	Lr
	(m)	(m)	(m)			(Hz)		dB(A)	dB	dB	(dB)	(dB)	(dB)	(dB)	(dB)	(dB)	(dB)	(dB)	(dB)	(dB)	dB(A)
115	454945.8	5634996.35	402.47	0	DEN	A		93.4	19.2	0	0	0	85.1	2.4	1.2	0	0	9.7	0	0	14.2
118	454946.75	5634990.45	402.23	0	DEN	A		93.4	19	0	0	0	85.1	2.4	1.2	0	0	8.3	0	0	15.5

Point Source, ISO 9613, Name: "Shovel_10m3_pp", ID: "!09080101!Shov10_pp"

Nr.	X	Y	Z	Refl.	DEN	Freq.		Lw	l/a	Optime	K0	Di	Adiv	Aatm	Agr	Afol	Ahous	Abar	Cmet	RL	Lr
	(m)	(m)	(m)			(Hz)		dB(A)	dB	dB	(dB)	(dB)	(dB)	(dB)	(dB)	(dB)	(dB)	(dB)	(dB)	(dB)	dB(A)
130	455666.07	5635063.4	433.5	0	23	A		114	0	-1.9	0	0	85.8	6.4	3	0	0	1.8	0	0	15.1

Area Source, ISO 9613, Name: "CFR_Plant", ID: "!09070600!CFR_Pla"

Nr.	X	Y	Z	Refl.	DEN	Freq.		Lw	l/a	Optime	K0	Di	Adiv	Aatm	Agr	Afol	Ahous	Abar	Cmet	RL	Lr
	(m)	(m)	(m)			(Hz)		dB(A)	dB	dB	(dB)	(dB)	(dB)	(dB)	(dB)	(dB)	(dB)	(dB)	(dB)	(dB)	dB(A)

142	455806.25	5634484.87	377.3	0	DEN	A		82.5	29.8	0	0	0	86.6	7	5.8	0	0	1	0	0	12.1

Point Source, ISO 9613, Name: "FrontLoaderCAT993_03_pp", ID: "!09080101!FLoader_03_pp"																					
Nr.	X	Y	Z	Refl.	DEN	Freq.		Lw	l/a	Optime	K0	Di	Adiv	Aatm	Agr	Afol	Ahous	Abar	Cmet	RL	Lr
	(m)	(m)	(m)			(Hz)		dB(A)	dB	dB	(dB)	(dB)	(dB)	(dB)	(dB)	(dB)	(dB)	(dB)	(dB)	(dB)	dB(A)
148	458169.44	5635307.11	412.5	0	23	A		116	0	-1.9	0	0	88.2	7.8	3.2	0	0	2	0	0	12.9

Line Source, ISO 9613, Name: "UGR23 AEXPortal to PAG Stockpile", ID: "!090804!HA777_UGR23"																					
Nr.	X	Y	Z	Refl.	DEN	Freq.		Lw	l/a	Optime	K0	Di	Adiv	Aatm	Agr	Afol	Ahous	Abar	Cmet	RL	Lr
	(m)	(m)	(m)			(Hz)		dB(A)	dB	dB	(dB)	(dB)	(dB)	(dB)	(dB)	(dB)	(dB)	(dB)	(dB)	(dB)	dB(A)
154	457751.05	5634955.33	393.5	0	DEN	A		93.7	19.7	0	0	0	88.1	8.5	3.2	0	0	1.6	0	0	12.1
160	457345.24	5636215.54	513.5	0	DEN	A		93.7	18.4	0	0	0	86.7	7.6	3.4	0	0	1.4	0	0	12.9
208	457321.91	5636165.92	513.5	0	DEN	A		93.7	16.1	0	0	0	86.7	7.6	3.4	0	0	1.4	0	0	10.6
214	457401.68	5635766.11	441.29	0	DEN	A		93.7	16.4	0	0	0	87.1	7.9	3.3	0	0	1.5	0	0	10.3

Line Source, ISO 9613, Name: "UGR3 AEXPortal to Crusher", ID: "!070102!HA785_UGR3"																					
Nr.	X	Y	Z	Refl.	DEN	Freq.		Lw	l/a	Optime	K0	Di	Adiv	Aatm	Agr	Afol	Ahous	Abar	Cmet	RL	Lr
	(m)	(m)	(m)			(Hz)		dB(A)	dB	dB	(dB)	(dB)	(dB)	(dB)	(dB)	(dB)	(dB)	(dB)	(dB)	(dB)	dB(A)
181	454778.16	5634547.91	381.8	0	DEN	A		90.9	18.6	0	0	0	85.5	6.9	2.4	0	0	2.4	0	0	12.2
186	455710.89	5634201.98	381.17	0	DEN	A		90.9	19.5	0	0	0	86.8	7.7	3.7	0	0	1.4	0	0	10.8
201	455748.41	5634306.05	382.03	0	DEN	A		90.9	18.8	0	0	0	86.7	7.6	3.7	0	0	1.4	0	0	10.3
250	454936.08	5634369.87	382.09	0	DEN	A		90.9	17	0	0	0	85.9	7.1	2.4	0	0	2.3	0	0	10.1

Point Source, ISO 9613, Name: "FrontLoaderSmallerCAT966_01_pp", ID: "!09080101!FL_01_pp"																					
Nr.	X	Y	Z	Refl.	DEN	Freq.		Lw	l/a	Optime	K0	Di	Adiv	Aatm	Agr	Afol	Ahous	Abar	Cmet	RL	Lr
	(m)	(m)	(m)			(Hz)		dB(A)	dB	dB	(dB)	(dB)	(dB)	(dB)	(dB)	(dB)	(dB)	(dB)	(dB)	(dB)	dB(A)
274	456249.26	5635075.14	402.5	0	23	A		109	0	-1.2	0	0	86.4	4.5	3.4	0	0	1.5	0	0	12

vert. Area Source, ISO 9613, Name: "TransferTowerPebbleCrusher_F3", ID: "!0200!TTPC_f3"																					
Nr.	X	Y	Z	Refl.	DEN	Freq.		Lw	l/a	Optime	K0	Di	Adiv	Aatm	Agr	Afol	Ahous	Abar	Cmet	RL	Lr
	(m)	(m)	(m)			(Hz)		dB(A)	dB	dB	(dB)	(dB)	(dB)	(dB)	(dB)	(dB)	(dB)	(dB)	(dB)	(dB)	dB(A)
338	454950.17	5634998.04	397.87	0	DEN	A		94	11.3	0	0	0	85.1	2.4	1.4	0	0	3.4	0	0	13.1
341	454950.17	5634998.04	399.87	0	DEN	A		94	11.3	0	0	0	85.1	2.4	1.2	0	0	3.6	0	0	13.1
343	454950.17	5634998.04	400.87	0	DEN	A		94	11.3	0	0	0	85.1	2.4	1.2	0	0	3.6	0	0	13.1
345	454950.17	5634998.04	398.87	0	DEN	A		94	11.3	0	0	0	85.1	2.4	1.2	0	0	3.5	0	0	13.1
347	454950.17	5634998.04	393.87	0	DEN	A		94	11.3	0	0	0	85.1	2.4	2.7	0	0	2.1	0	0	13.1
348	454950.17	5634998.04	394.87	0	DEN	A		94	11.3	0	0	0	85.1	2.4	2.4	0	0	2.3	0	0	13.1
351	454950.17	5634998.04	401.87	0	DEN	A		94	11.3	0	0	0	85.1	2.4	1.2	0	0	3.6	0	0	13.1
352	454950.17	5634998.04	396.87	0	DEN	A		94	11.3	0	0	0	85.1	2.4	1.7	0	0	3.1	0	0	13.1
354	454950.17	5634998.04	395.87	0	DEN	A		94	11.3	0	0	0	85.1	2.4	2.1	0	0	2.7	0	0	13.1
355	454950.17	5634998.04	392.87	0	DEN	A		94	11.3	0	0	0	85.1	2.4	2.9	0	0	1.9	0	0	13.1
357	454950.17	5634998.04	391.87	0	DEN	A		94	11.3	0	0	0	85.1	2.4	3.1	0	0	1.7	0	0	13.1
359	454950.17	5634998.04	390.87	0	DEN	A		94	11.3	0	0	0	85.1	2.4	3.4	0	0	1.9	0	0	12.7
360	454950.17	5634998.04	389.87	0	DEN	A		94	11.3	0	0	0	85.1	2.4	3.6	0	0	1.7	0	0	12.6

vert. Area Source, ISO 9613, Name: "PrimaryCrusher_F3", ID: "!0300!PriC_f3"																					
Nr.	X	Y	Z	Refl.	DEN	Freq.		Lw	l/a	Optime	K0	Di	Adiv	Aatm	Agr	Afol	Ahous	Abar	Cmet	RL	Lr
	(m)	(m)	(m)			(Hz)		dB(A)	dB	dB	(dB)	(dB)	(dB)	(dB)	(dB)	(dB)	(dB)	(dB)	(dB)	(dB)	dB(A)
464	454800.45	5634676.39	401.91	0	DEN	A		90.5	14.6	0	0	0	85.4	2.6	0.8	0	0	4	0	0	12.3
468	454800.45	5634676.39	402.91	0	DEN	A		90.5	14.6	0	0	0	85.4	2.6	0.8	0	0	4	0	0	12.3
469	454800.45	5634676.39	403.91	0	DEN	A		90.5	14.6	0	0	0	85.4	2.6	0.8	0	0	4	0	0	12.3
471	454800.45	5634676.39	400.91	0	DEN	A		90.5	14.6	0	0	0	85.4	2.6	0.8	0	0	3.9	0	0	12.3
473	454800.45	5634676.39	397.91	0	DEN	A		90.5	14.6	0	0	0	85.4	2.6	0.9	0	0	3.9	0	0	12.3
475	454800.45	5634676.39	398.91	0	DEN	A		90.5	14.6	0	0	0	85.4	2.6	0.9	0	0	3.9	0	0	12.3
477	454800.45	5634676.39	399.91	0	DEN	A		90.5	14.6	0	0	0	85.4	2.6	0.9	0	0	3.9	0	0	12.3
479	454800.45	5634676.39	404.91	0	DEN	A		90.5	14.6	0	0	0	85.4	2.6	0.8	0	0	4	0	0	12.3
480	454800.45	5634676.39	409.91	0	DEN	A		90.5	14.6	0	0	0	85.4	2.6	0.7	0	0	4	0	0	12.3
482	454800.45	5634676.39	410.91	0	DEN	A		90.5	14.6	0	0	0	85.4	2.6	0.7	0	0	4	0	0	12.3
484	454800.45	5634676.39	411.91	0	DEN	A		90.5	14.6	0	0	0	85.4	2.6	0.7	0	0	4	0	0	12.3
485	454800.45	5634676.39	408.91	0	DEN	A		90.5	14.6	0	0	0	85.4	2.6	0.7	0	0	4	0	0	12.3
487	454800.45	5634676.39	405.91	0	DEN	A		90.5	14.6	0	0	0	85.4	2.6	0.8	0	0	4	0	0	12.3
489	454800.45	5634676.39	406.91	0	DEN	A		90.5	14.6	0	0	0	85.4	2.6	0.8	0	0	4	0	0	12.3
491	454800.45	5634676.39	407.91	0	DEN	A		90.5	14.6	0	0	0	85.4	2.6	0.8	0	0	4	0	0	12.3
493	454800.45	5634676.39	386.91	0	DEN	A		90.5	14.6	0	0	0	85.4	2.6	2.3	0	0	2.5	0	0	12.3
494	454800.45	5634676.39	387.91	0	DEN	A		90.5	14.6	0	0	0	85.4	2.6	2.1	0	0	2.7	0	0	12.3
496	454800.45	5634676.39	388.91	0	DEN	A		90.5	14.6	0	0	0	85.4	2.6	1.7	0	0	3.1	0	0	12.3
499	454800.45	5634676.39	385.91	0	DEN	A		90.5	14.6	0	0	0	85.4	2.6	2.5	0	0	2.3	0	0	12.3
501	454800.45	5634676.39	382.91	0	DEN	A		90.5	14.6	0	0	0	85.4	2.6	3.2	0	0	1.7	0	0	12.1
503	454800.45	5634676.39	383.91	0	DEN	A		90.5	14.6	0	0	0	85.4	2.6	3	0	0	1.9	0	0	12.1
505	454800.45	5634676.39	384.91	0	DEN	A		90.5	14.6	0	0	0	85.4	2.6	2.7	0	0	2.1	0	0	12.3
506	454800.45	5634676.39	389.91	0	DEN	A		90.5	14.6	0	0	0	85.4	2.6	1.3	0	0	3.5	0	0	12.3
508	454800.45	5634676.39	394.91	0	DEN	A		90.5	14.6	0	0	0	85.4	2.6	0.8	0	0	3.9	0	0	12.3
510	454800.45	5634676.39	395.91	0	DEN	A		90.5	14.6	0	0	0	85.4	2.6	0.9	0	0	3.9	0	0	12.3
512	454800.45	5634676.39	396.91	0	DEN	A		90.5	14.6	0	0	0	85.4	2.6	0.9	0	0	3.9	0	0	12.3
513	454800.45	5634676.39	393.91	0	DEN	A		90.5	14.6	0	0	0	85.4	2.6	0.8	0	0	3.9	0	0	12.3
515	454800.45	5634676.39	390.91	0	DEN	A		90.5	14.6	0	0	0	85.4	2.6	1	0	0	3.8	0	0	12.3
517	454800.45	5634676.39	391.91	0	DEN	A		90.5	14.6	0	0	0	85.4	2.6	0.9	0	0	3.9	0	0	12.3
519	454800.45	5634676.39	392.91	0	DEN	A		90.5	14.6	0	0	0	85.4	2.6	0.8	0	0	3.9	0	0	12.3

vert. Area Source, ISO 9613, Name: "TransferTowerPebbleCrusher_F4", ID: "!0200!TTPC_f4"																					
Nr.	X	Y	Z	Refl.	DEN	Freq.		Lw	l/a	Optime	K0	Di	Adiv	Aatm	Agr	Afol	Ahous	Abar	Cmet	RL	Lr
	(m)	(m)	(m)			(Hz)		dB(A)	dB	dB	(dB)	(dB)	(dB)	(dB)	(dB)	(dB)	(dB)	(dB)	(dB)	(dB)	dB(A)
622	454940.97	5634997.69	396.99	0	DEN	A		93.5	10.8	0	0	0	85.1	2.4	1.7	0	0	3.1	0	0	12.1
625	454940.97	5634997.69	397.99	0	DEN	A		93.5	10.8	0	0	0	85.1	2.4	1.4	0	0	3.4	0	0	12.1
627	454940.97	5634997.69	393.99	0	DEN	A		93.5	10.8	0	0	0	85.1	2.4	2.7	0	0	2.1	0	0	12.1
628	454940.97	5634997.69	395.99	0	DEN	A		93.5	10.8	0	0	0	85.1	2.4	2.1	0	0	2.7	0	0	12.1
629	454940.97	5634997.69	392.99	0	DEN	A		93.5	10.8	0	0	0	85.1	2.4	2.8	0	0	1.9	0	0	12.1
631	454940.97	5634997.69	389.99	0	DEN	A		93.5	10.8	0	0	0	85.1	2.4	3.6	0	0	1.7	0	0	11.6
633	454940.97	5634997.69	394.99	0	DEN	A		93.5	10.8	0	0	0	85.1	2.4	2.4	0	0	2.3	0	0	12.1
634	454940.97	5634997.69	399.99	0	DEN	A		93.5	10.8	0	0	0	85.1	2.4	1.2	0	0	3.6	0	0	12.1
635	454940.97	5634997.69	400.99	0	DEN	A		93.5	10.8	0	0	0	85.1	2.4	1.2	0	0	3.6	0	0	12.1
638	454940.97	5634997.69	401.99	0	DEN	A		93.5	10.8	0	0	0	85.1	2.4	1.2	0	0	3.6	0	0	12.1
639	454940.97	5634997.69	391.99	0	DEN	A		93.5	10.8	0	0	0	85.1	2.4	3.1	0	0	1.7	0	0	12.1
642	454940.97	5634997.69	398.99	0	DEN	A		93.5	10.8	0	0	0	85.1	2.4	1.2	0	0	3.5	0	0	12.1
644	454940.97	5634997.69	390.99	0	DEN	A		93.5	10.8	0	0	0	85.1	2.4	3.4	0	0	1.9	0	0	11.7

Receiver	
Name:	RPOR5
ID:	!0A!POR_5
X:	451670.63 m
Y:	5630890.60 m
Z:	353.50 m

Point Source, ISO 9613, Name: "VentilationFan_HingeLimb_FAR2", ID: "!090800!VF_HL_FAR2"																					
Nr.	X	Y	Z	Refl.	DEN	Freq.		Lw	l/a	Optime	K0	Di	Adiv	Aatm	Agr	Afol	Ahous	Abar	Cmet	RL	Lr
	(m)	(m)	(m)			(Hz)		dB(A)	dB	dB	(dB)	(dB)	(dB)	(dB)	(dB)	(dB)	(dB)	(dB)	(dB)	(dB)	dB(A)
34	456756.4	5633595.3	359.01	0	DEN	A		129.7	0	0	0	0	86.2	15	3.6	0	0	2.3	0	0	22.6

Point Source, ISO 9613, Name: "VentilationFan_HingeLimb_FAR2", ID: "!090800!VF_HL_FAR2"																					
Nr.	X	Y	Z	Refl.	DEN	Freq.		Lw	l/a	Optime	K0	Di	Adiv	Aatm	Agr	Afol	Ahous	Abar	Cmet	RL	Lr
	(m)	(m)	(m)			(Hz)		dB(A)	dB	dB	(dB)	(dB)	(dB)	(dB)	(dB)	(dB)	(dB)	(dB)	(dB)	(dB)	dB(A)
40	456757.36	5633595.42	359	0	DEN	A		129.7	0	0	0	0	86.2	15	3.6	0	0	2.3	0	0	22.6

Point Source, ISO 9613, Name: "VentilationFan_AEX", ID: "!090A0602!VentFan_aex"																					
Nr.	X	Y	Z	Refl.	DEN	Freq.		Lw	l/a	Optime	K0	Di	Adiv	Aatm	Agr	Afol	Ahous	Abar	Cmet	RL	Lr
	(m)	(m)	(m)			(Hz)		dB(A)	dB	dB	(dB)	(dB)	(dB)	(dB)	(dB)	(dB)	(dB)	(dB)	(dB)	(dB)	dB(A)
46	455504.36	5634507.08	380.08	0	DEN	A		128.5	0	0	0	0	85.4	14.3	2.4	0	0	2.8	0	0	23.6

Point Source, ISO 9613, Name: "CrushFeeder_CAT777_idling", ID: "!09080101!FeederCru_777_pp"																					
Nr.	X	Y	Z	Refl.	DEN	Freq.		Lw	l/a	Optime	K0	Di	Adiv	Aatm	Agr	Afol	Ahous	Abar	Cmet	RL	Lr
	(m)	(m)	(m)			(Hz)		dB(A)	dB	dB	(dB)	(dB)	(dB)	(dB)	(dB)	(dB)	(dB)	(dB)	(dB)	(dB)	dB(A)
63	454807.06	5634653.38	402.84	0	23	A		121	0	-6	0	0	84.8	6.5	2.4	0	0	2.4	0	0	18.9

Area Source, ISO 9613, Name: "Primary Crusher_Top", ID: "!0300!PriC_top"																					
Nr.	X	Y	Z	Refl.	DEN	Freq.		Lw	l/a	Optime	K0	Di	Adiv	Aatm	Agr	Afol	Ahous	Abar	Cmet	RL	Lr
	(m)	(m)	(m)			(Hz)		dB(A)	dB	dB	(dB)	(dB)	(dB)	(dB)	(dB)	(dB)	(dB)	(dB)	(dB)	(dB)	dB(A)
91	454808.22	5634679.72	412.41	0	DEN	A		89.7	23.3	0	0	0	84.8	2.5	1.9	0	0	2.8	0	0	21
278	454808.43	5634664.48	411.88	0	DEN	A		89.7	21.6	0	0	0	84.8	2.5	1.9	0	0	2.8	0	0	19.2
324	454812.01	5634673.42	412.04	0	DEN	A		89.7	20.6	0	0	0	84.8	2.5	1.9	0	0	2.8	0	0	18.2
785	454801.01	5634661.98	411.98	0	DEN	A		89.7	15.7	0	0	0	84.8	2.5	1.9	0	0	2.8	0	0	13.4

Area Source, ISO 9613, Name: "TransferTowerPebbleCrusher_Top", ID: "!0200!TTPC_top"																					
Nr.	X	Y	Z	Refl.	DEN	Freq.		Lw	l/a	Optime	K0	Di	Adiv	Aatm	Agr	Afol	Ahous	Abar	Cmet	RL	Lr
	(m)	(m)	(m)			(Hz)		dB(A)	dB	dB	(dB)	(dB)	(dB)	(dB)	(dB)	(dB)	(dB)	(dB)	(dB)	(dB)	dB(A)
241	454945.8	5634996.35	402.47	0	DEN	A		93.4	19.2	0	0	0	85.4	2.4	1.6	0	0	3.2	0	0	19.9
246	454946.75	5634990.45	402.23	0	DEN	A		93.4	19	0	0	0	85.4	2.4	1.6	0	0	3.2	0	0	19.8

Area Source, ISO 9613, Name: "CFR_Plant", ID: "!09070600!CFR_Pla"																					
Nr.	X	Y	Z	Refl.	DEN	Freq.		Lw	l/a	Optime	K0	Di	Adiv	Aatm	Agr	Afol	Ahous	Abar	Cmet	RL	Lr
	(m)	(m)	(m)			(Hz)		dB(A)	dB	dB	(dB)	(dB)	(dB)	(dB)	(dB)	(dB)	(dB)	(dB)	(dB)	(dB)	dB(A)
264	455806.25	5634484.87	377.3	0	DEN	A		82.5	29.8	0	0	0	85.8	6.7	5.9	0	0	1	0	0	13

Point Source, ISO 9613, Name: "FrontLoaderCAT993_02_pp", ID: "!09080101!FLoader_02_pp"																					
Nr.	X	Y	Z	Refl.	DEN	Freq.		Lw	l/a	Optime	K0	Di	Adiv	Aatm	Agr	Afol	Ahous	Abar	Cmet	RL	Lr
	(m)	(m)	(m)			(Hz)		dB(A)	dB	dB	(dB)	(dB)	(dB)	(dB)	(dB)	(dB)	(dB)	(dB)	(dB)	(dB)	dB(A)
290	456570.22	5635589.78	452.5	0	23	A		116	0	-1.9	0	0	87.6	7.4	3	0	0	2	0	0	14

Point Source, ISO 9613, Name: "Shovel_10m3_pp", ID: "!09080101!Shov10_pp"																					
Nr.	X	Y	Z	Refl.	DEN	Freq.		Lw	l/a	Optime	K0	Di	Adiv	Aatm	Agr	Afol	Ahous	Abar	Cmet	RL	Lr
	(m)	(m)	(m)			(Hz)		dB(A)	dB	dB	(dB)	(dB)	(dB)	(dB)	(dB)	(dB)	(dB)	(dB)	(dB)	(dB)	dB(A)
315	455666.07	5635063.4	433.5	0	23	A		114	0	-1.9	0	0	86.2	6.6	2.8	0	0	2	0	0	14.4

Line Source, ISO 9613, Name: "UGR23 AEXPortal to PAG Stockpile", ID: "!090804!HA777_UGR23"																					
Nr.	X	Y	Z	Refl.	DEN	Freq.		Lw	l/a	Optime	K0	Di	Adiv	Aatm	Agr	Afol	Ahous	Abar	Cmet	RL	Lr
	(m)	(m)	(m)			(Hz)		dB(A)	dB	dB	(dB)	(dB)	(dB)	(dB)	(dB)	(dB)	(dB)	(dB)	(dB)	(dB)	dB(A)
335	457751.05	5634955.33	393.5	0	DEN	A		93.7	19.7	0	0	0	88.3	8.7	3	0	0	1.8	0	0	11.7

Point Source, ISO 9613, Name: "FrontLoaderCAT993_03_pp", ID: "!09080101!FLoader_03_pp"																					
Nr.	X	Y	Z	Refl.	DEN	Freq.		Lw	l/a	Optime	K0	Di	Adiv	Aatm	Agr	Afol	Ahous	Abar	Cmet	RL	Lr
	(m)	(m)	(m)			(Hz)		dB(A)	dB	dB	(dB)	(dB)	(dB)	(dB)	(dB)	(dB)	(dB)	(dB)	(dB)	(dB)	dB(A)
356	458169.44	5635307.11	412.5	0	23	A		116	0	-1.9	0	0	88.9	8.2	2.9	0	0	2.1	0	0	11.9

Line Source, ISO 9613, Name: "UGR3 AEXPortal to Crusher", ID: "!070102!HA785_UGR3"																					
Nr.	X	Y	Z	Refl.	DEN	Freq.		Lw	l/a	Optime	K0	Di	Adiv	Aatm	Agr	Afol	Ahous	Abar	Cmet	RL	Lr
	(m)	(m)	(m)			(Hz)		dB(A)	dB	dB	(dB)	(dB)	(dB)	(dB)	(dB)	(dB)	(dB)	(dB)	(dB)	(dB)	dB(A)
364	455710.89	5634201.98	381.17	0	DEN	A		90.9	19.5	0	0	0	85.4	6.8	3.9	0	0	1.4	0	0	12.9
371	454778.16	5634547.91	381.8	0	DEN	A		90.9	18.6	0	0	0	84.6	6.4	3.6	0	0	1.3	0	0	13.5
395	455748.41	5634306.05	382.03	0	DEN	A		90.9	18.8	0	0	0	85.5	6.9	4	0	0	1.4	0	0	12
400	455568.39	5634176.94	377.43	0	DEN	A		90.9	18.2	0	0	0	85.1	6.7	3.9	0	0	1.4	0	0	12
446	454936.08	5634369.87	382.09	0	DEN	A		90.9	17	0	0	0	84.6	6.4	4	0	0	1.4	0	0	11.6
474	455001.14	5634331.36	380.34	0	DEN	A		90.9	17	0	0	0	84.6	6.4	4	0	0	1.4	0	0	11.5
509	454864.4	5634451.15	376.94	0	DEN	A		90.9	16.2	0	0	0	84.6	6.4	3.8	0	0	1.3	0	0	10.9

vert. Area Source, ISO 9613, Name: "Primary_F4_binOP", ID: "!0300!PriC_f4_binOP"																					
Nr.	X	Y	Z	Refl.	DEN	Freq.		Lw	l/a	Optime	K0	Di	Adiv	Aatm	Agr	Afol	Ahous	Abar	Cmet	RL	Lr
	(m)	(m)	(m)			(Hz)		dB(A)	dB	dB	(dB)	(dB)	(dB)	(dB)	(dB)	(dB)	(dB)	(dB)	(dB)	(dB)	dB(A)
421	454803.03	5634659.48	410.05	0	DEN	A		103.7	4.8	0	0	0	84.8	4	2	0	0	2.8	0	0	14.8
428	454803.03	5634659.48	408.05	0	DEN	A		103.7	4.8	0	0	0	84.8	4	2	0	0	2.8	0	0	14.8
433	454803.03	5634659.48	407.05	0	DEN	A		103.7	4.8	0	0	0	84.8	4	2	0	0	2.8	0	0	14.8
441	454803.03	5634659.48	409.05	0	DEN	A		103.7	4.8	0	0	0	84.8	4	2	0	0	2.8	0	0	14.8

Point Source, ISO 9613, Name: "FrontLoaderSmallerCAT966_01_pp", ID: "!09080101!FL_01_pp"																					
Nr.	X	Y	Z	Refl.	DEN	Freq.		Lw	l/a	Optime	K0	Di	Adiv	Aatm	Agr	Afol	Ahous	Abar	Cmet	RL	Lr
	(m)	(m)	(m)			(Hz)		dB(A)	dB	dB	(dB)	(dB)	(dB)	(dB)	(dB)	(dB)	(dB)	(dB)	(dB)	(dB)	dB(A)
766	456249.26	5635075.14	402.5	0	23	A		109	0	-1.2	0	0	86.9	4.6	3.1	0	0	1.7	0	0	11.4

vert. Area Source, ISO 9613, Name: "PrimaryCrusher_F3", ID: "!0300!PriC_f3"																					
Nr.	X	Y	Z	Refl.	DEN	Freq.		Lw	l/a	Optime	K0	Di	Adiv	Aatm	Agr	Afol	Ahous	Abar	Cmet	RL	Lr
	(m)	(m)	(m)			(Hz)		dB(A)	dB	dB	(dB)	(dB)	(dB)	(dB)	(dB)	(dB)	(dB)	(dB)	(dB)	(dB)	dB(A)
845	454800.45	5634676.39	409.91	0	DEN	A		90.5	14.6	0	0	0	84.8	2.5	1.9	0	0	2.8	0	0	13
852	454800.45	5634676.39	407.91	0	DEN	A		90.5	14.6	0	0	0	84.8	2.5	1.9	0	0	2.9	0	0	13
857	454800.45	5634676.39	408.91	0	DEN	A		90.5	14.6	0	0	0	84.8	2.5	1.9	0	0	2.9	0	0	13
864	454800.45	5634676.39	398.91	0	DEN	A		90.5	14.6	0	0	0	84.8	2.5	1.8	0	0	3	0	0	13
870	454800.45	5634676.39	397.91	0	DEN	A		90.5	14.6	0	0	0	84.8	2.5	1.8	0	0	3	0	0	13
879	454800.45	5634676.39	410.91	0	DEN	A		90.5	14.6	0	0	0	84.8	2.5	1.9	0	0	2.8	0	0	13
886	454800.45	5634676.39	411.91	0	DEN	A		90.5	14.6	0	0	0	84.8	2.5	1.9	0	0	2.8	0	0	13
893	454800.45	5634676.39	405.91	0	DEN	A		90.5	14.6	0	0	0	84.8	2.5	1.9	0	0	2.9	0	0	13
900	454800.45	5634676.39	402.91	0	DEN	A		90.5	14.6	0	0	0	84.8	2.5	1.9	0	0	2.9	0	0	13
906	454800.45	5634676.39	403.91	0	DEN	A		90.5	14.6	0	0	0	84.8	2.5	1.9	0	0	2.9	0	0	13
913	454800.45	5634676.39	404.91	0	DEN	A		90.5	14.6	0	0	0	84.8	2.5	1.9	0	0	2.9	0	0	13
919	454800.45	5634676.39	400.91	0	DEN	A		90.5	14.6	0	0	0	84.8	2.5	1.8	0	0	2.9	0	0	13
928	454800.45	5634676.39	399.91	0	DEN	A		90.5	14.6	0	0	0	84.8	2.5	1.8	0	0	3	0	0	13
936	454800.45	5634676.39	401.91	0	DEN	A		90.5	14.6	0	0	0	84.8	2.5	1.8	0	0	2.9	0	0	13
942	454800.45	5634676.39	406.91	0	DEN	A		90.5	14.6	0	0	0	84.8	2.5	1.9	0	0	2.9	0	0	13
947	454800.45	5634676.39	386.91	0	DEN	A		90.5	14.6	0	0	0	84.8	2.5	3.1	0	0	1.7	0	0	13
954	454800.45	5634676.39	387.91	0	DEN	A		90.5	14.6	0	0	0	84.8	2.5	2.9	0	0	1.9	0	0	13
960	454800.45	5634676.39	388.91	0	DEN	A		90.5	14.6	0	0	0	84.8	2.5	2.5	0	0	2.2	0	0	13
965	454800.45	5634676.39	385.91	0	DEN	A		90.5	14.6	0	0	0	84.8	2.5	3.3	0	0	1.5	0	0	13
971	454800.45	5634676.39	382.91	0	DEN	A		90.5	14.6	0	0	0	84.8	2.5	4	0	0	0.9	0	0	12.8
975	454800.45	5634676.39	383.91	0	DEN	A		90.5	14.6	0	0	0	84.8	2.5	3.8	0	0	1.1	0	0	12.9
980	454800.45	5634676.39	384.91	0	DEN	A		90.5	14.6	0	0	0	84.8	2.5	3.5	0	0	1.3	0	0	12.9
986	454800.45	5634676.39	389.91	0	DEN	A		90.5	14.6	0	0	0	84.8	2.5	2.2	0	0	2.5	0	0	13
994	454800.45	5634676.39	394.91	0	DEN	A		90.5	14.6	0	0	0	84.8	2.5	1.7	0	0	3	0	0	13
1001	454800.45	5634676.39	395.91	0	DEN	A		90.5	14.6	0	0	0	84.8	2.5	1.8	0	0	3	0	0	13
1005	454800.45	5634676.39	396.91	0	DEN	A		90.5	14.6	0	0	0	84.8	2.5	1.8	0	0	3	0	0	13
1011	454800.45	5634676.39	393.91	0	DEN	A		90.5	14.6	0	0	0	84.8	2.5	1.7	0	0	3	0	0	13
1016	454800.45	5634676.39	390.91	0	DEN	A		90.5	14.6	0	0	0	84.8	2.5	2	0	0	2.8	0	0	13
1022	454800.45	5634676.39	391.91	0	DEN	A		90.5	14.6	0	0	0	84.8	2.5	1.8	0	0	3	0	0	13
1028	454800.45	5634676.39	392.91	0	DEN	A		90.5	14.6	0	0	0	84.8	2.5	1.7	0	0	3	0	0	13

vert. Area Source, ISO 9613, Name: "TransferTowerPebbleCrusher_F1", ID: "!0200!TTPC_f1"																					
Nr.	X	Y	Z	Refl.	DEN	Freq.		Lw	l/a	Optime	K0	Di	Adiv	Aatm	Agr	Afol	Ahous	Abar	Cmet	RL	Lr
	(m)	(m)	(m)			(Hz)		dB(A)	dB	dB	(dB)	(dB)	(dB)	(dB)	(dB)	(dB)	(dB)	(dB)	(dB)	(dB)	dB(A)
1256	454942.42	5634988.74	394.63	0	DEN	A		94.1	11.3	0	0	0	85.4	2.4	3	0	0	1.8	0	0	12.7
1260	454942.42	5634988.74	390.63	0	DEN	A		94.1	11.3	0	0	0	85.4	2.4	3.9	0	0	1	0	0	12.7
1265	454942.42	5634988.74	395.63	0	DEN	A		94.1	11.3	0	0	0	85.4	2.4	2.6	0	0	2.2	0	0	12.7
1266	454942.42	5634988.74	401.63	0	DEN	A		94.1	11.3	0	0	0	85.4	2.4	1.6	0	0	3.2	0	0	12.7
1268	454942.42	5634988.74	392.63	0	DEN	A		94.1	11.3	0	0	0	85.4	2.4	3.4	0	0	1.4	0	0	12.7
1269	454942.42	5634988.74	393.63	0	DEN	A		94.1	11.3	0	0	0	85.4	2.4	3.2	0	0	1.6	0	0	12.7
1272	454942.42	5634988.74	391.63	0	DEN	A		94.1	11.3	0	0	0	85.4	2.4	3.6	0	0	1.2	0	0	12.7
1274	454942.42	5634988.74	398.63	0	DEN	A		94.1	11.3	0	0	0	85.4	2.4	1.7	0	0	3.1	0	0	12.7
1277	454942.42	5634988.74	400.63	0	DEN	A		94.1	11.3	0	0	0	85.4	2.4	1.6	0	0	3.2	0	0	12.7
1278	454942.42	5634988.74	399.63	0	DEN	A		94.1	11.3	0	0	0	85.4	2.4	1.6	0	0	3.1	0	0	12.7
1282	454942.42	5634988.74	397.63	0	DEN	A		94.1	11.3	0	0	0	85.4	2.4	1.9	0	0	2.9	0	0	12.7
1284	454942.42	5634988.74	389.63	0	DEN	A		94.1	11.3	0	0	0	85.4	2.4	4.1	0	0	0.8	0	0	12.6
1288	454942.42	5634988.74	396.63	0	DEN	A		94.1	11.3	0	0	0	85.4	2.4	2.2	0	0	2.6	0	0	12.7

vert. Area Source, ISO 9613, Name: "TransferTowerPebbleCrusher_F4", ID: "!0200!TTPC_f4"																						
Nr.	X	Y	Z	Refl.	DEN	Freq.		Lw	l/a	Optime	K0	Di	Adiv	Aatm	Agr	Afol	Ahous	Abar	Cmet	RL	Lr
	(m)	(m)	(m)			(Hz)		dB(A)	dB	dB	(dB)	(dB)	(dB)	(dB)	(dB)	(dB)	(dB)	(dB)	(dB)	(dB)	dB(A)
1650	454940.97	5634997.69	401.99	0	DEN	A		93.5	10.8	0	0	0	85.4	2.4	1.6	0	0	3.8	0	0	11.1

vert. Area Source, ISO 9613, Name: "TransferTowerPebbleCrusher_F2", ID: "!0200!TTPC_f2"																						
Nr.	X	Y	Z	Refl.	DEN	Freq.		Lw	l/a	Optime	K0	Di	Adiv	Aatm	Agr	Afol	Ahous	Abar	Cmet	RL	Lr
	(m)	(m)	(m)			(Hz)		dB(A)	dB	dB	(dB)	(dB)	(dB)	(dB)	(dB)	(dB)	(dB)	(dB)	(dB)	(dB)	dB(A)
1663	454951.6	5634989.19	398.52	0	DEN	A		93.6	10.8	0	0	0	85.4	2.4	1.7	0	0	3.1	0	0	11.7
1667	454951.6	5634989.19	390.52	0	DEN	A		93.6	10.8	0	0	0	85.4	2.4	3.9	0	0	1	0	0	11.7
1672	454951.6	5634989.19	391.52	0	DEN	A		93.6	10.8	0	0	0	85.4	2.4	3.6	0	0	1.2	0	0	11.7
1675	454951.6	5634989.19	392.52	0	DEN	A		93.6	10.8	0	0	0	85.4	2.4	3.4	0	0	1.4	0	0	11.7
1679	454951.6	5634989.19	393.52	0	DEN	A		93.6	10.8	0	0	0	85.4	2.4	3.2	0	0	1.6	0	0	11.7
1685	454951.6	5634989.19	401.52	0	DEN	A		93.6	10.8	0	0	0	85.4	2.4	1.6	0	0	3.2	0	0	11.7
1688	454951.6	5634989.19	395.52	0	DEN	A		93.6	10.8	0	0	0	85.4	2.4	2.6	0	0	2.2	0	0	11.7
1691	454951.6	5634989.19	399.52	0	DEN	A		93.6	10.8	0	0	0	85.4	2.4	1.6	0	0	3.1	0	0	11.7
1696	454951.6	5634989.19	400.52	0	DEN	A		93.6	10.8	0	0	0	85.4	2.4	1.6	0	0	3.2	0	0	11.7
1700	454951.6	5634989.19	397.52	0	DEN	A		93.6	10.8	0	0	0	85.4	2.4	1.9	0	0	2.9	0	0	11.7
1703	454951.6	5634989.19	389.52	0	DEN	A		93.6	10.8	0	0	0	85.4	2.4	4.1	0	0	0.8	0	0	11.6
1706	454951.6	5634989.19	396.52	0	DEN	A		93.6	10.8	0	0	0	85.4	2.4	2.2	0	0	2.6	0	0	11.7
1710	454951.6	5634989.19	394.52	0	DEN	A		93.6	10.8	0	0	0	85.4	2.4	3	0	0	1.8	0	0	11.7

Receiver	
Name:	RPOR6
ID:	!0A!POR_6
X:	465139.06 m
Y:	5634938.68 m
Z:	349.42 m

Point Source, ISO 9613, Name: "VentilationFan_HingeLimb_FAR2", ID: "!090800!VF_HL_FAR2"																						
Nr.	X	Y	Z	Refl.	DEN	Freq.		Lw	l/a	Optime	K0	Di	Adiv	Aatm	Agr	Afol	Ahous	Abar	Cmet	RL	Lr
	(m)	(m)	(m)			(Hz)		dB(A)	dB	dB	(dB)	(dB)	(dB)	(dB)	(dB)	(dB)	(dB)	(dB)	(dB)	(dB)	dB(A)
1	456757.36	5633595.42	359	0	DEN	A		129.7	0	0	0	0	89.6	18.7	4.2	0	0	2.2	0	0	15

Point Source, ISO 9613, Name: "VentilationFan_HingeLimb_FAR2", ID: "!090800!VF_HL_FAR2"																						
Nr.	X	Y	Z	Refl.	DEN	Freq.		Lw	l/a	Optime	K0	Di	Adiv	Aatm	Agr	Afol	Ahous	Abar	Cmet	RL	Lr
	(m)	(m)	(m)			(Hz)		dB(A)	dB	dB	(dB)	(dB)	(dB)	(dB)	(dB)	(dB)	(dB)	(dB)	(dB)	(dB)	dB(A)
3	456756.4	5633595.3	359.01	0	DEN	A		129.7	0	0	0	0	89.6	18.7	4.2	0	0	2.2	0	0	15

Point Source, ISO 9613, Name: "VentilationFan_AEX", ID: "!090A0602!VentFan_aex"																						
Nr.	X	Y	Z	Refl.	DEN	Freq.		Lw	l/a	Optime	K0	Di	Adiv	Aatm	Agr	Afol	Ahous	Abar	Cmet	RL	Lr
	(m)	(m)	(m)			(Hz)		dB(A)	dB	dB	(dB)	(dB)	(dB)	(dB)	(dB)	(dB)	(dB)	(dB)	(dB)	(dB)	dB(A)
11	455504.36	5634507.08	380.08	0	DEN	A		128.5	0	0	0	0	90.7	20	3.8	0	0	2.5	0	0	11.5

Point Source, ISO 9613, Name: "DieselGenset 200 kW casing - Chakuni River", ID: "!070101!WatEff_booster"																						
Nr.	X	Y	Z	Refl.	DEN	Freq.		Lw	l/a	Optime	K0	Di	Adiv	Aatm	Agr	Afol	Ahous	Abar	Cmet	RL	Lr
	(m)	(m)	(m)			(Hz)		dB(A)	dB	dB	(dB)	(dB)	(dB)	(dB)	(dB)	(dB)	(dB)	(dB)	(dB)	(dB)	dB(A)
13	464942	5633802	344.88	0	DEN	A		100.4	0	0	0	0	72.2	3	3.8	0	0	2.7	0	0	18.7

Point Source, ISO 9613, Name: "FrontLoaderCAT993_03_pp", ID: "!09080101!FLoader_03_pp"																						
Nr.	X	Y	Z	Refl.	DEN	Freq.		Lw	l/a	Optime	K0	Di	Adiv	Aatm	Agr	Afol	Ahous	Abar	Cmet	RL	Lr
	(m)	(m)	(m)			(Hz)		dB(A)	dB	dB	(dB)	(dB)	(dB)	(dB)	(dB)	(dB)	(dB)	(dB)	(dB)	(dB)	dB(A)
64	458169.44	5635307.11	412.5	0	23	A		116	0	-1.9	0	0	87.9	7.5	3.3	0	0	1.9	0	0	13.4

Line Source, ISO 9613, Name: "UGR23 AEXPortal to PAG Stockpile", ID: "!090804!HA777_UGR23"																						
Nr.	X	Y	Z	Refl.	DEN	Freq.		Lw	l/a	Optime	K0	Di	Adiv	Aatm	Agr	Afol	Ahous	Abar	Cmet	RL	Lr
	(m)	(m)	(m)			(Hz)		dB(A)	dB	dB	(dB)	(dB)	(dB)	(dB)	(dB)	(dB)	(dB)	(dB)	(dB)	(dB)	dB(A)
76	457751.05	5634955.33	393.5	0	DEN	A		93.7	19.7	0	0	0	88.4	8.7	3.3	0	0	1.5	0	0	11.5

Point Source, ISO 9613, Name: "DieselGenSet_50 kW casing - Chakuni River", ID: "!070101!Wat_booster"																						
Nr.	X	Y	Z	Refl.	DEN	Freq.		Lw	l/a	Optime	K0	Di	Adiv	Aatm	Agr	Afol	Ahous	Abar	Cmet	RL	Lr
	(m)	(m)	(m)			(Hz)		dB(A)	dB	dB	(dB)	(dB)	(dB)	(dB)	(dB)	(dB)	(dB)	(dB)	(dB)	(dB)	dB(A)
78	463813	5633822	364.5	0	DEN	A		100.4	0	0	0	0	75.8	5	1.5	0	0	4.9	0	0	13.2

Point Source, ISO 9613, Name: "FrontLoaderCAT993_02_pp", ID: "!09080101!FLoader_02_pp"																						
Nr.	X	Y	Z	Refl.	DEN	Freq.		Lw	l/a	Optime	K0	Di	Adiv	Aatm	Agr	Afol	Ahous	Abar	Cmet	RL	Lr
	(m)	(m)	(m)			(Hz)		dB(A)	dB	dB	(dB)	(dB)	(dB)	(dB)	(dB)	(dB)	(dB)	(dB)	(dB)	(dB)	dB(A)
90	456570.22	5635589.78	452.5	0	23	A		116	0	-1.9	0	0	89.7	8.7	2.9	0	0	2.2	0	0	10.5

Point Source, ISO 9613, Name: "DieselGenSet_200 kW exhaust - Chakuni River ", ID: "!070101!WatEff_booster_ex"																						
Nr.	X	Y	Z	Refl.	DEN	Freq.		Lw	l/a	Optime	K0	Di	Adiv	Aatm	Agr	Afol	Ahous	Abar	Cmet	RL	Lr
	(m)	(m)	(m)			(Hz)		dB(A)	dB	dB	(dB)	(dB)	(dB)	(dB)	(dB)	(dB)	(dB)	(dB)	(dB)	(dB)	dB(A)
146	464929.35	5633802	347	0	DEN	A		94.3	0	0	0	0	72.3	3.5	0.8	0	0	4.1	0	0	13.7

Area Source, ISO 9613, Name: "Primary Crusher_Top", ID: "!0300!PriC_top"																						
Nr.	X	Y	Z	Refl.	DEN	Freq.		Lw	l/a	Optime	K0	Di	Adiv	Aatm	Agr	Afol	Ahous	Abar	Cmet	RL	Lr
	(m)	(m)	(m)			(Hz)		dB(A)	dB	dB	(dB)	(dB)	(dB)	(dB)	(dB)	(dB)	(dB)	(dB)	(dB)	(dB)	dB(A)
168	454808.22	5634679.72	412.41	0	DEN	A		89.7	23.3	0	0	0	91.3	4.9	1.6	0	0	3.2	0	0	12.1

321	454808.43	5634664.48	411.88	0	DEN	A		89.7	21.6	0	0	0	91.3	4.9	1.6	0	0	3.2	0	0	10.4

Area Source, ISO 9613, Name: ''TransferTowerPebbleCrusher_Top'', ID: ''!0200!TTPC_top''																				
Nr.	X	Y	Z	Refl.	DEN	Freq.		Lw	l/a	Optime	K0	Di	Adiv	Aatm	Agr	Afol	Ahous	Abar	Cmet	RL	Lr
	(m)	(m)	(m)			(Hz)		dB(A)	dB	dB	(dB)	(dB)	(dB)	(dB)	(dB)	(dB)	(dB)	(dB)	(dB)	(dB)	dB(A)
193	454945.8	5634996.35	402.47	0	DEN	A		93.4	19.2	0	0	0	91.2	4.6	1.6	0	0	3.2	0	0	12
217	454946.75	5634990.45	402.23	0	DEN	A		93.4	19	0	0	0	91.2	4.6	1.6	0	0	3.2	0	0	11.9

Appendix G

Technical Terms and Acoustical Descriptors

Technical Terms and Acoustical Descriptors

Frequency	Typically the rate in Hertz (Hz) - previously denoted cycles per second, at which an event is repeated. *Normal human hearing extends over a range of frequencies from about 15 Hz to about 15 kHz.*
A-Weighting Network	A frequency-response adjustment of a sound level meter that makes its reading conform to human response. The sensitivity of the human ear is frequency dependent. At low and high frequencies, the ear is not very sensitive, but between 500 Hz and 6 kHz the ear is very sensitive. The A-weighting filter is a broadband filter that covers the interval from 20 Hz to 20 kHz. The shape of the A-weighting curve approximates the frequency sensitivity of the human ear. So the A-weighted value of a noise source is an approximation to how the human ear perceives the noise. Written as dB(A) or dBA
Z-Weighting Network	Z for 'Zero' frequency weighting, which implies no frequency weighting. In reality the range is 10 Hz to 20 kHz ±1.5 dB. Introduced (IEC 61672 2003) to replace the Flat or Linear Filters. Written as dB(Z) or dBZ
Exponential Averaging	Generates a continuous running average where the most recently sampled levels have more influence on the average than older samples. This provides a convenient form to examine rapidly changing data with the benefit of some averaging to smooth the spectra.
Linear Averaging	The process of adding together a sequence of spectra measurements and then dividing the total by the number of samples. The result is a true arithmetic average on a sample by sample basis. Averaging smooths out random noise components in a spectrum.
Time Constants or Time Weightings	Time constants used for exponential averaging. Three time constants can be used and are defined as: • Fast "F" time constant corresponds to 125 ms; • Slow "S" time constant corresponds to 1s; and • Impulse "I" time constant corresponding to 35 ms while the signal level is increasing and 1,500 ms while the signal level is decreasing.
P(t) – "Sound Pressure"	The instantaneous difference between the actual pressure and the average barometric pressure at a given location.
Sound Pressure Level (SPL)	A measurement of instantaneous sound pressure and equal to 20 times the logarithm (base 10) of the ratio of the instantaneous

sound pressure of a sound divided by the reference sound pressure of 20 µPa (0 dB). Reported and measured in decibels (dB or dBA).

Some feeling for the relation between subjective loudness and sound pressure level may be gained by reference to the figure and table below. (Source: David A. Bies and Colin H. Hansen, *Engineering Noise Control Theory and Practice*, Third Edition)

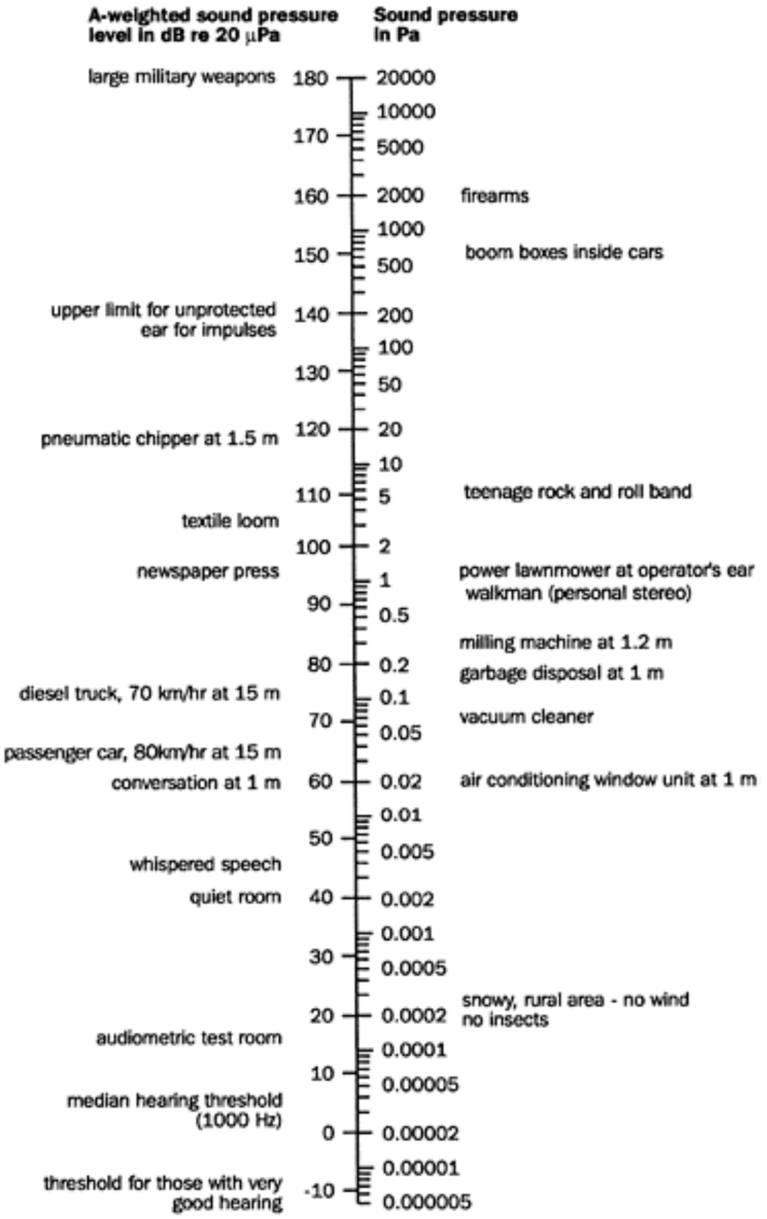

Sound pressure level (dB re 20 µPa)	Description of sound source	Typical subjective description
140	Moon launch at 100 m; artillery fire, gunner's position	Intolerable
120	Ship's engine room; rock concert, in front and close to speakers	
100	Textile mill; press room with presses running; punch press and wood planers, at operator's position	Very noisy
80	Next to busy highway, shouting	Noisy
60	Department store, restaurant, speech levels	
40	Quiet residential neighbourhood, ambient level	Quiet
20	Recording studio, ambient level	Very Quiet
0	Threshold of hearing for normal young people	

$L_{xeq}(T)$ – "*Equivalent continuous sound level* with a frequency weighting, x"	The equivalent continuous sound level (also called time-average sound level), $L_{xeq}(T)$, is defined as twenty times the logarithm to base ten of the ratio of a root-mean-square sound pressure during a time interval (T) to the reference sound pressure, sound pressure being obtained with a frequency weighting, x. x can be replaced by: • A for A-weighted; • B for B-weighted; • C for C-weighted; or • Z for Z-weighted.
$L_{xymax}(T)$ – "*Maximum sound level,* with a frequency weighting, x, and *with a* time-weighting, y"	The maximum time-weighted sound level, $L_{xymax}(T)$, is defined as the greatest time-weighted sound level, $L_{xy}(t)$, within a measurement interval (T). x can be replaced by: • A for A-weighted; • B for B-weighted; • C for C-weighted; or

	• Z for Z-weighted. • Y can be replaced by: • S for slow time weighting, or • F for fast time weighting.
$L_{xymin}(T)$ – "*Minimum sound level,* with a frequency weighting, x, and *with a* time-weighting, y"	The minimum time-weighted sound level, $L_{xymin}(T)$, is defined as the smallest time-weighted sound level, $L_{xy}(t)$, within a measurement interval (T). x can be replaced by: • A for A-weighted, • B for B-weighted, • C for C-weighted, or • Z for Z-weighted. • Y can be replaced by: • S for slow time weighting, or • F for fast time weighting.
L_{xyN} – "*N^{th} Exceedance level,* with a frequency weighting, x, and *with a* time-weighting, y" *where N is between 0.1 to 99.9*	Is the sound pressure level which is exceeded N percent of the measurement time. The sound pressure being obtained with a frequency weighting, x and a time-weighting, y. x can be replaced by: • A for A-weighted; • B for B-weighted; • C for C-weighted; or • Z for Z-weighted. • Y can be replaced by: • S for slow time weighting, or • F for fast time weighting.
$L_{xpeak}(T)$ – "Peak sound level	The peak sound level, $L_{xpeak}(T)$, is defined as twenty times the logarithm to base ten of the ratio of the greatest absolute instantaneous sound pressure, $p_x(t)$, instantaneous sound pressure being obtained with a frequency weighting, x x can be replaced by: • A for A-weighted; • B for B-weighted; • C for C-weighted; or • Z for Z-weighted.

Octave Band	A band of frequencies where the upper limiting frequency (u.l.f.) is twice the lower limiting frequency (l.l.f.). *Octave bands are identified by their centre-frequencies. The octave bands standardized for acoustic measurements include those centered at 31.5, 63, 125, 250, 500, 1000, 2000, 4000, & 8000 Hz.*
Velocity	Rate of change in position, measured in distance per unit of time. When measuring vibration signals, velocity represents the rate of change in displacement. Units: Millimetres per second [mm/s].
Peak Particle Velocity (PPV)	Highest particle velocity which is recorded during a particular vibration event. Unit: Millimetres per second [mm/s].
Root Mean Square (RMS) Velocity	Square root of the average of the squared instantaneous vibration velocity (V) over a specified time interval or integration time (T) reported in millimeters per second (mm/s). For the purposes of vibration monitoring the integration time (T) is one second. Unit: Millimetres per second [mm/s].
1/N Octave Band	A band of frequencies integrally divided from an Octave Band. The u.l.f. equals $2^{1/N}$ times the l.l.f. *The most commonly used frequency band is the 1/3 octave band.*
Five-Number Summary	The five-number summary is a set of descriptive statistics that provide information about a dataset. It consists of the five most important sample percentiles: The sample minimum (smallest observation); The lower quartile or first quartile; The median (middle value); The upper quartile or third quartile; and The sample maximum (largest observation). 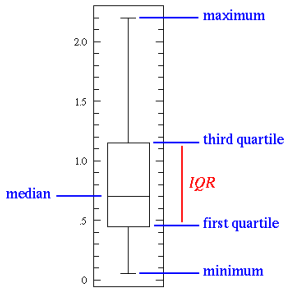

Box plot Representation or Box plot Graph	Box plot (also known as a box-and-whisker plot) is a type of graph that is designed specifically to show the distribution of a set of data based on a five-number summary. The representation of the box plot and data varies depending on the used. Alternates of the Five-Number Summary are generally used. Box plots are uniform in their use of the box: the bottom and top of the box are always the first and third quartiles, and the band inside the box is always the median, but the ends of the whiskers can represent several possible alternative values. 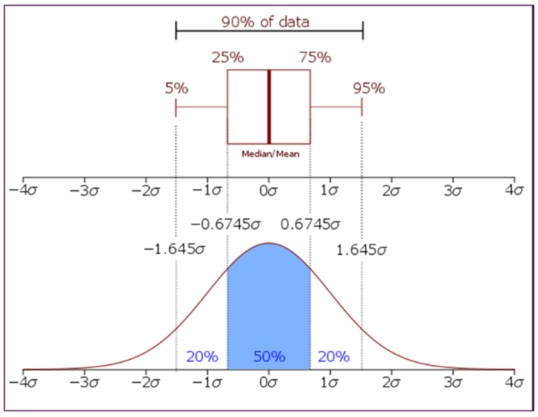 It should be noted that Box plots describe the sample and make no representation or assumptions regarding the population. Box plot data need not be normally distributed as represented in the figure above. For the purpose of this report the type of representation chosen for the box plots represents a set of summary data that differs from the Five-Number Summary as follows: The “whiskers” represent the 5 percentile and 95 percentile of the sample; The red square indicated within the plot is the mean of the sample; and The red dots represent any data points below or above the 5 and 95 percentiles respectively of the sample (including maximum and minimum of the sample).

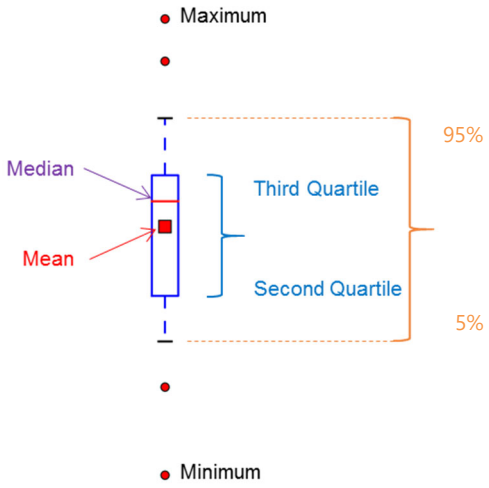
Maximum
95%
Median
Third Quartile
Mean
Second Quartile
5%
Minimum

Limitations

Limitations

1. The work performed in the preparation of this report and the conclusions presented are subject to the following:
    a. The Standard Terms and Conditions which form a part of our Professional Services Contract;
    b. The Scope of Services;
    c. Time and Budgetary limitations as described in our Contract; and
    d. The Limitations stated herein.
2. No other warranties or representations, either expressed or implied, are made as to the professional services provided under the terms of our Contract, or the conclusions presented.
3. The conclusions presented in this report were based, in part, on visual observations of the Site and attendant structures. Our conclusions cannot and are not extended to include those portions of the Site or structures, which are not reasonably available, in Wood's opinion, for direct observation.
4. The environmental conditions at the Site were assessed, within the limitations set out above, having due regard for applicable environmental regulations as of the date of the inspection. A review of compliance by past owners or occupants of the Site with any applicable local, provincial or federal bylaws, orders-in-council, legislative enactments and regulations was not performed.
5. The Site history research included obtaining information from third parties and employees or agents of the owner. No attempt has been made to verify the accuracy of any information provided, unless specifically noted in our report.
6. Where testing was performed, it was carried out in accordance with the terms of our contract providing for testing. Other substances, or different quantities of substances testing for, may be present on-site and may be revealed by different or other testing not provided for in our contract.
7. Because of the limitations referred to above, different environmental conditions from those stated in our report may exist. Should such different conditions be encountered, Wood must be notified in order that it may determine if modifications to the conclusions in the report are necessary.
8. The utilization of Wood's services during the implementation of any remedial measures will allow Wood to observe compliance with the conclusions and recommendations contained in the report. Wood's involvement will also allow for changes to be made as necessary to suit field conditions as they are encountered.
9. This report is for the sole use of the party to whom it is addressed unless expressly stated otherwise in the report or contract. Any use which any third party makes of the report, in whole or the part, or any reliance thereon or decisions made based on any information or conclusions in the report is the sole responsibility of such third party. Wood accepts no responsibility whatsoever for damages or loss of any nature or kind suffered by any such third party as a result of actions taken or not taken or decisions made in reliance on the report, or anything set out therein.
10. This report is not to be given over to any third party for any purpose whatsoever without the written permission of Wood.
11. Provided that the report is still reliable, and less than 12 months old, Wood will issue a third-party reliance letter to parties that the client identifies in writing, upon payment of the then current fee for such letters. All third parties relying on Wood's report, by such reliance agree to be bound by our proposal and Wood's standard reliance letter. Wood's standard reliance letter indicates that in no event shall Wood be liable for any damages, howsoever arising, relating to third-party reliance on Wood's report. No reliance by any party is permitted without such agreement.